

Built-in oven

[en] INSTRUCTION MANUAL

B27CR22.1B

NEFF

Table of contents

Intended use 4

Important safety information 4
General information 4
Halogen lamp 5
Cleaning function 5

Causes of damage 6
General information 6

Environmental protection 6
Saving energy 6
Environmentally-friendly disposal 6

Getting to know your appliance 7
Control panel 7
Controls 7
Main menu 8
Menu for the types of heating 8
Cooking compartment functions 9

Accessories 9
Accessories included 9
Inserting accessories 9
Combining accessories 10
Optional accessories 10

Before using for the first time 11
Initial use 11
Cleaning the cooking compartment 11
Cleaning the accessories 11

Operating the appliance 12
Switching the appliance on and off 12
Setting and starting the appliance operation 12
Changing or cancelling the appliance operation 13
Heating up the appliance quickly 13

Time-setting options 14
Showing and hiding the time-setting options 14
Setting the timer 14
Setting the cooking time 14
Start delay – "Ready at" 14
Checking, changing or deleting settings 14

Childproof lock 15
Automatic childproof lock 15
One-time childproof lock 15

Basic settings 16
Changing the basic settings 16
List of basic settings 16
Setting favourites 16

Sabbath mode 17
Starting Sabbath mode 17
Cancelling Sabbath mode 17

Cleaning agent 17
Suitable cleaning agents 17
Keeping the appliance clean 18

Cleaning function 19
Self-cleaning 19
EasyClean 20

Rails 21
Detaching and refitting the rails 21

Appliance door 21
Removing and fitting the appliance door 21
Removing the door cover 22
Removing and installing the door panels 22

Trouble shooting 24
Fault table 24
Maximum operating time exceeded 24
Replacing the bulb in the top of the cooking compartment 24
Glass cover 25

Customer service 25
E number and FD number 25

Tested for you in our cooking studio 26
Silicone moulds 26
Baking 26
Roasting and braising 28
Grilling 31
Convenience products 33
Yogurt 35
Save energy with Eco heating types 35
Acrylamide in foodstuffs 36
Slow cook 37
Drying 38
Preserving 38
Allowing the dough to prove at dough proving setting 39
Defrosting 40
Keeping warm 40
Test dishes 40

Additional information on products, accessories, replacement parts and services can be found at **www.neff-international.com** and in the online shop **www.neff-eshop.com**

Intended use

Read these instructions carefully. Only then will you be able to operate your appliance safely and correctly. Retain the instruction manual and installation instructions for future use or for subsequent owners.

This appliance is only intended to be fully fitted in a kitchen. Observe the special installation instructions.

Check the appliance for damage after unpacking it. Do not connect the appliance if it has been damaged in transport.

Only a licensed professional may connect appliances without plugs. Damage caused by incorrect connection is not covered under warranty.

This appliance is intended for domestic use only. The appliance must only be used for the preparation of food and drink. The appliance must be supervised during operation. Only use this appliance indoors.

This appliance is intended for use up to a maximum height of 2000 metres above sea level.

This appliance may be used by children over the age of 8 years old and by persons with reduced physical, sensory or mental capabilities or by persons with a lack of experience or knowledge if they are supervised or are instructed by a person responsible for their safety how to use the appliance safely and have understood the associated hazards.

Children must not play with, on, or around the appliance. Children must not clean the appliance or carry out general maintenance unless they are at least 8 years old and are being supervised.

Keep children below the age of 8 years old at a safe distance from the appliance and power cable.

Always slide accessories into the cooking compartment the right way round.
⟶ *"Accessories" on page 9*

Important safety information

General information

Warning
Risk of fire!

- Combustible items stored in the cooking compartment may catch fire. Never store combustible items in the cooking compartment. Never open the appliance door if there is smoke inside. Switch off the appliance and unplug it from the mains or switch off the circuit breaker in the fuse box.
- A draught is created when the appliance door is opened. Greaseproof paper may come into contact with the heating element and catch fire. Do not place greaseproof paper loosely over accessories during preheating. Always weight down the greaseproof paper with a dish or a baking tin. Only cover the surface required with greaseproof paper. Greaseproof paper must not protrude over the accessories.

Warning
Risk of burns!

- The appliance becomes very hot. Never touch the interior surfaces of the cooking compartment or the heating elements. Always allow the appliance to cool down. Keep children at a safe distance.
- Accessories and ovenware become very hot. Always use oven gloves to remove accessories or ovenware from the cooking compartment.
- Alcoholic vapours may catch fire in the hot cooking compartment. Never prepare food containing large quantities of drinks with a high alcohol content. Only use small quantities of drinks with a high alcohol content. Open the appliance door with care.

Warning
Risk of scalding!

- The accessible parts become hot during operation. Never touch the hot parts. Keep children at a safe distance.
- When you open the appliance door, hot steam can escape. Steam may not be visible, depending on its temperature. When opening, do not stand too close to the appliance. Open the appliance door carefully. Keep children away.
- Water in a hot cooking compartment may create hot steam. Never pour water into the hot cooking compartment.

⚠ Warning
Risk of injury!
- Scratched glass in the appliance door may develop into a crack. Do not use a glass scraper, sharp or abrasive cleaning aids or detergents.
- The hinges on the appliance door move when opening and closing the door, and you may be trapped. Keep your hands away from the hinges.

⚠ Warning
Risk of electric shock!
- Incorrect repairs are dangerous. Repairs may only be carried out and damaged power cables replaced by one of our trained after-sales technicians. If the appliance is defective, unplug the appliance from the mains or switch off the circuit breaker in the fuse box. Contact the after-sales service.
- The cable insulation on electrical appliances may melt when touching hot parts of the appliance. Never bring electrical appliance cables into contact with hot parts of the appliance.
- Do not use any high-pressure cleaners or steam cleaners, which can result in an electric shock.
- A defective appliance may cause electric shock. Never switch on a defective appliance. Unplug the appliance from the mains or switch off the circuit breaker in the fuse box. Contact the after-sales service.

⚠ Warning
Hazard due to magnetism!
Permanent magnets are used in the control panel or in the control elements. They may affect electronic implants, e.g. heart pacemakers or insulin pumps. Wearers of electronic implants must stay at least 10 cm away from the control panel.

Halogen lamp

⚠ Warning
Risk of electric shock!
When replacing the cooking compartment bulb, the bulb socket contacts are live. Before replacing the bulb, unplug the appliance from the mains or switch off the circuit breaker in the fuse box.

Cleaning function

⚠ Warning
Risk of fire!
- Loose food residues, grease and meat juices may catch fire during the cleaning function. Before starting the cleaning function, remove coarse dirt from the cooking compartment and from the accessories.
- The appliance will become very hot on the outside during the cleaning function. Never hang combustible objects, e.g. tea towels, on the door handle. Do not place anything against the front of the appliance. Keep children away from the appliance.

⚠ Warning
Risk of serious damage to health!
The appliance will become very hot during the cleaning function. The non-stick coating on baking trays and tins is destroyed and noxious gases are released. Never clean non-stick baking trays and baking tins using the cleaning function. Only clean enamelled accessories using the cleaning function.

⚠ Warning
Risk of burns!
- The cooking compartment becomes extremely hot during the cleaning function. Never open the appliance door or move the locking latch by hand. Allow the appliance to cool down. Keep children away from the appliance.
- ⚠ The appliance will become very hot on the outside during the cleaning function. Never touch the appliance door. Allow the appliance to cool down. Keep children away from the appliance.

Causes of damage

General information

Caution!

- Accessories, foil, greaseproof paper or ovenware on the cooking compartment floor: do not place accessories on the cooking compartment floor. Do not cover the cooking compartment floor with any sort of foil or greaseproof paper. Do not place ovenware on the cooking compartment floor if a temperature of over 50 °C has been set. This will cause heat to accumulate. The baking and roasting times will no longer be correct and the enamel will be damaged.
- Aluminium foil: Aluminium foil in the cooking compartment must not come into contact with the door glass. This could cause permanent discolouration of the door glass.
- Water in a hot cooking compartment: do not pour water into the cooking compartment when it is hot. This will cause steam. The temperature change can cause damage to the enamel.
- Moisture in the cooking compartment: Over an extended period of time, moisture in the cooking compartment may lead to corrosion. Allow the cooking compartment to dry after use. Do not keep moist food in the closed cooking compartment for extended periods of time. Do not store food in the cooking compartment.
- Cooling with the appliance door open: Following operation at high temperatures, only allow the cooking compartment to cool down with the door closed. Do not trap anything in the appliance door. Even if the door is only left open a crack, the front of nearby furniture may become damaged over time. Only leave the cooking compartment to dry with the door open if a lot of moisture was produced whilst the oven was operating.
- Fruit juice: when baking particularly juicy fruit pies, do not pack the baking tray too generously. Fruit juice dripping from the baking tray leaves stains that cannot be removed. If possible, use the deeper universal pan.
- Extremely dirty seal: If the seal is very dirty, the appliance door will no longer close properly during operation. The fronts of adjacent units could be damaged. Always keep the seal clean.
- Appliance door as a seat, shelf or worktop: Do not sit on the appliance door, or place or hang anything on it. Do not place any cookware or accessories on the appliance door.
- Inserting accessories: depending on the appliance model, accessories can scratch the door panel when closing the appliance door. Always insert the accessories into the cooking compartment as far as they will go.
- Carrying the appliance: do not carry or hold the appliance by the door handle. The door handle cannot support the weight of the appliance and could break.

Environmental protection

Your new appliance is particularly energy-efficient. Here you can find tips on how to save even more energy when using the appliance, and how to dispose of your appliance properly.

Saving energy

- Only preheat the appliance if this is specified in the recipe or in the tables in the operating instructions.
- Use dark, black lacquered or enamelled baking tins. They absorb heat particularly well.
- Open the appliance door as infrequently as possible during operation.
- It is best to bake several cakes one after the other. The cooking compartment is still warm. This reduces the baking time for the second cake. You can place two cake tins next to each other in the cooking compartment.
- For longer cooking times, you can switch the appliance off 10 minutes before the end of the cooking time and use the residual heat to finish cooking.

Environmentally-friendly disposal

Dispose of packaging in an environmentally-friendly manner.



This appliance is labelled in accordance with European Directive 2012/19/EU concerning used electrical and electronic appliances (waste electrical and electronic equipment - WEEE). The guideline determines the framework for the return and recycling of used appliances as applicable throughout the EU.

Getting to know your appliance

In this chapter, we will explain the displays and controls. You will also find out about the various functions of your appliance.

Note: Depending on the appliance model, individual details and colours may differ.

Control panel

In the control panel, set the appliance's different functions. The current settings are shown on the display.



1 Display
2 Touch buttons
3 ShiftControl control

Controls

Use the controls to set your appliance simply and directly.

Touch buttons

There are sensors under the touch buttons. Touch on the corresponding touch button to select a function.

Touch button		Use
⏻	on/off	Switching the appliance on or off⟶ *"Switching the appliance on and off" on page 12*
⌂	Main menu	Selecting operating modes and settings ⟶ *"Setting and starting the appliance operation" on page 12*
⏲	Time-setting options	Setting the timer, cooking time, or "Ready at" start delay ⟶ *"Time-setting options" on page 14*
	Childproof lock	Activating or deactivating the childproof lock ⟶ *"Childproof lock" on page 15*
ℹ	Information	Displaying further information Displaying the current temperature ⟶ *"Setting and starting the appliance operation" on page 12*
	Rapid heating	Activating or deactivating rapid heating ⟶ *"Heating up the appliance quickly" on page 13*
		Activating or deactivating PowerBoost ⟶ *"Heating up the appliance quickly" on page 13*
⏯	Start/Stop	Starting or stopping the operation ⟶ *"Setting and starting the appliance operation" on page 12*

ShiftControl control

Use the ShiftControl control element to navigate through the lines on the display and select the settings. Settings that you can change have left and right arrows 〈 〉.

Button		Use
〈	Left	Navigates to the left on the display
〉	Right	Navigates to the right on the display
⌃	Up	Navigates upwards on the display
⌄	Down	Navigates downwards on the display

Note: You can also scroll through the settings values quickly by pressing and holding a button. As soon as you release the button, you stop scrolling through the values quickly.

Main menu

Touch the ⌂ touch button to access the main menu.

Menu	Use
	Types of heating Selecting the required type of heating and temperature for your dish ⟶ *"Switching the appliance on and off" on page 12*
	Basic settings Individually adjusting the appliance settings⟶ *"Basic settings" on page 16*
	EasyClean Cleaning light soiling from the cooking compartment ⟶ *"Cleaning function" on page 19*
	Self-cleaning Cleaning the cooking compartment pyrolytically ⟶ *"Cleaning function" on page 19*

Menu for the types of heating

Your appliance has different types of heating. After switching on the appliance, you are taken directly to the menu for the types of heating.

Type of heating		Temperature	Use
	CircoTherm hot air	40 - 200 °C	For baking and cooking on one or more levels. The fan distributes the heat from the ring heating element in the back panel evenly around the cooking compartment.
	Top/bottom heating	50 - 275 °C	For traditional baking and roasting on one level. Especially suitable for cakes with moist toppings. Heat is emitted evenly from the top and bottom.
	Circo-roasting	50 - 250 °C	For roasting poultry, whole fish and larger pieces of meat. The grill element and the fan switch on and off alternately. The fan circulates the hot air around the food.
	Pizza setting	50 - 275 °C	For preparing pizza and dishes which require a lot of heat from underneath. The bottom heating element and the ring heating element in the back panel heat up.
	Bread-baking	180 - 240 °C	For baking bread, bread rolls and baked items that require high temperatures.
	Grill, large area	50 - 290 °C	For grilling flat items, such as steaks or sausages, for making toast, and for au gratin dishes. The whole area below the grill element becomes hot.
	Grill, small area	50 - 290 °C	For grilling small amounts of steaks or sausages, for making toast, and for au gratin dishes. The centre area under the grill heating element becomes hot.
	Bottom heating	50 - 250 °C	For cooking in a bain marie and for the final baking stage. The heat is emitted from below.
	Slow cooking	70 - 120 °C	For gentle and slow cooking of seared, tender pieces of meat in ovenware without a lid. The heat is emitted evenly from the top and bottom at low temperatures.
	Dough proving	35 - 55 °C	For leaving yeast dough and sourdough to prove and for culturing yogurt. Dough will prove more quickly than at room temperature. The surface of the dough does not dry out.
eco	Top/bottom heating eco	50 - 275 °C	For energy-optimised cooking of selected dishes. Heat is emitted evenly from the top and bottom.
eco	CircoTherm eco	40 - 200 °C	For energy-optimised cooking of selected dishes on one level without preheating. The fan distributes the energy-optimised heat from the ring heating element in the back wall evenly around the cooking compartment.

Cooking compartment functions

The functions in the cooking compartment make your appliance easier to use. This, for example, enables the cooking compartment to be well lit and a cooling fan to prevent the appliance from overheating.

Opening the appliance door

If you open the appliance door during an operation, the operation is paused. The operation continues to run when you close the door.

Note: For some types of heating, the operation continues to run even when the appliance door is open.

Interior lighting

If you open the appliance door, the interior lighting switches on. If the door remains open for longer than around 15 minutes, the lighting switches off again.

For most operating modes, the interior lighting switches on as soon as the operation is started. When the operation has finished, the lighting switches off.

Note: You can set the interior lighting not to come on during the operation in the basic settings. ⟶ *"Basic settings" on page 16*

Cooling fan

The cooling fan switches on and off as required. The hot air escapes above the door.

Caution!
Do not cover the ventilation slots. Otherwise, the appliance may overheat.

So that the cooking compartment cools down more quickly after the operation, the cooling fan continues to run for a certain period afterwards.

Note: You can change how long the cooling fan continues to run for in the basic settings. ⟶ *"Basic settings" on page 16*

Accessories

Your appliance is accompanied by a range of accessories. Here, you can find an overview of the accessories included and information on how to use them correctly.

Accessories included

Your appliance is equipped with the following accessories:

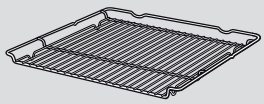

Wire rack
For ovenware, cake tins and ovenproof dishes.
For roasts and grilled food.

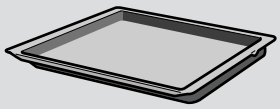

Universal pan
For moist cakes, pastries, frozen meals and large roasts.
It can be used to catch dripping fat when you are grilling directly on the wire rack.

Only use genuine accessories. They are specially adapted for your appliance.

You can buy accessories from the after-sales service, from specialist retailers or online.

Note: The accessories may become deformed when they become hot. This does not affect their function. Once they cool down again, they regain their original shape.

Inserting accessories

The cooking compartment has four shelf positions. The shelf positions are counted from the bottom up.

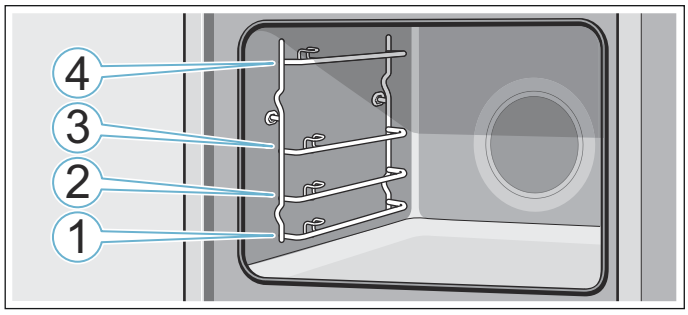

The accessories can be pulled out up to approximately halfway without tipping.

Notes

- Ensure that you always insert the accessories into the cooking compartment the right way round.
- Always insert the accessories fully into the cooking compartment so they do not touch the appliance door.

Locking function

The accessories can be pulled out approximately halfway until they lock in place. The locking function prevents the accessories from tilting when they are pulled out. The accessories must be inserted into the cooking compartment correctly for the tilt protection to work properly.

When inserting the wire rack, ensure that the lug **a** is at the rear and is facing downwards. The open side must be facing the appliance door and the curvature must be facing downwards ⌣.

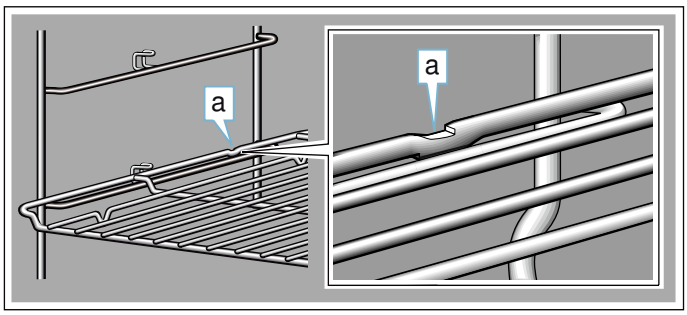

When inserting the baking tray or the universal pan, ensure that the lug **b** is at the rear and is facing downwards. The sloping edge of the accessory **c** must be facing towards the appliance door.

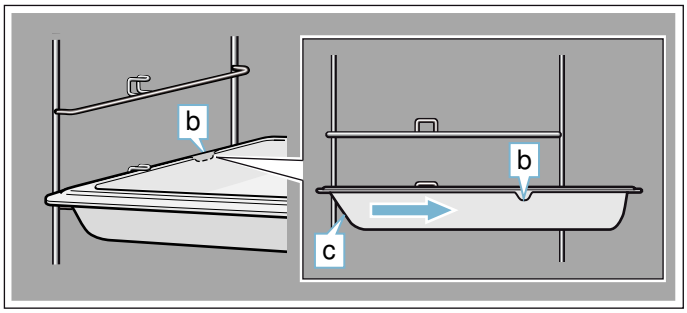

Combining accessories

You can insert the wire rack and the universal pan at the same time to catch drops of liquid.

When inserting the wire rack, ensure that both spacers **a** are at the rear edge. When the universal pan is inserted, the wire rack is on top of the upper guide rod of the shelf position.

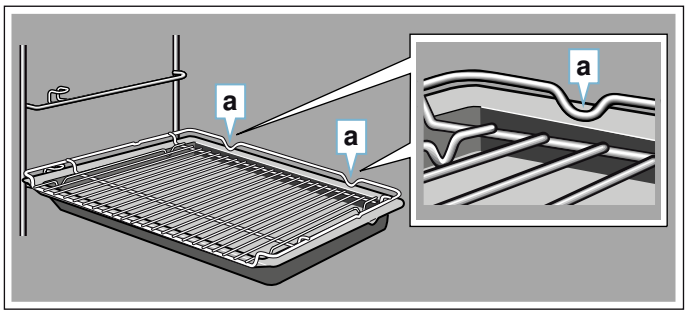

Optional accessories

You can purchase optional accessories from the after-sales service and specialist retailers, or on the Internet. You will find a comprehensive range of products for your appliance in our brochures and on the Internet.

Both availability and whether it is possible to order online differ between countries. Please see your sales documents for more details.

When purchasing, please always quote the exact order number of the optional accessory.

Note: Not all optional accessories are suitable for every appliance. When purchasing, please always quote the exact designation (E no.) of your appliance.
→ *"Customer service" on page 25*

Accessories	Order number
Baking and roasting shelf	Z11CR10X0
Baking tray, suitable for pyrolytic cleaning	Z12CB10A0
Universal pan, suitable for pyrolytic cleaning	Z12CU10A0
Extra-deep pan, suitable for pyrolytic cleaning	Z12CM10A0
Steaming set for ovens	Z19DD10X0
Profi pan, suitable for pyrolytic cleaning	Z12CN10A0
Lid for the Profi pan	Z12CL10A0
Pizza tray	Z1352X0
Grill tray, suitable for pyrolytic cleaning	Z12CQ10A0
Bread-baking stone, suitable for pyrolytic cleaning	Z1913X0
Glass roasting dish, 5.1 litres	Z11GT10X0
Glass pan	Z11GU10X0
ComfortFlex rail (1 level), suitable for pyrolytic cleaning*	Z12TC10X0
3 x fully extendable pull-out rack, suitable for pyrolytic cleaning*	Z12TF36X0

*Accessory does not fit in every appliance, quote the E no. when ordering

Before using for the first time

Before you can use your new appliance, you must make some settings. You must also clean the cooking compartment and accessories.

Initial use

As soon as the appliance is connected to the power supply, the first setting "Language" appears on the display.

Setting the language

1. Use the ﹀ button to navigate to the bottom line.
2. Use the 〈 or 〉 button to select the language.
3. Use the ﹀ button to return to "Language".
4. Use the 〉 button to select the next setting.

Setting the time

1. Use the ﹀ button to navigate to the next line.
2. Use the 〈 or 〉 button to select the current time.
3. Press the ﹀ button.
4. Use the 〉 button to select the next setting.

Setting the date

1. Use the ﹀ button to navigate to the next line.
2. Use the 〈 or 〉 button to select the current day.
3. Use the ﹀ button to return to "Day".
4. Use the 〉 button to select the next setting.
5. Use the ﹀ button to navigate to the next line.
6. Use the 〈 or 〉 button to select the current month.
7. Use the ﹀ button to return to "Month".
8. Use the 〉 button to select the next setting.
9. Use the ﹀ button to navigate to the next line.
10. Use the 〈 or 〉 button to select the current year.
11. Use the ﹀ button to return to "Year".
12. Use the 〉 button to apply the settings.
    The initial use is complete.

Notes

- You can change these settings at any time in the basic settings. ⟶ *"Basic settings" on page 16*
- After connecting the appliance to the power or following a power cut, the settings for initial use are shown in the display.

Cleaning the cooking compartment

To remove the new-appliance smell, heat up the cooking compartment when it is empty and with the oven door closed.

1. Remove the accessories from the cooking compartment.
2. Remove leftover packaging, such as polystyrene pellets, from the cooking compartment.
3. Before heating the appliance, wipe the smooth surfaces in the cooking compartment with a soft, wet cloth.
4. Use the ⏻ touch button to switch on the appliance.
5. Set the heating type and temperature, then start the appliance operation. ⟶ *"Setting and starting the appliance operation" on page 12*

Settings	
Heating type	Top/bottom heating
Temperature	240 °C
Cooking time	1 hour

6. Keep the kitchen ventilated while the appliance is heating up.
7. Use the ⏻ touch button to switch off the appliance after the indicated cooking time.
8. Wait until the cooking compartment has cooled down.
9. Clean the smooth surfaces with soapy water and a dish cloth.

Cleaning the accessories

Clean the accessories thoroughly using soapy water and a dish cloth or soft brush.

Operating the appliance

You have already learnt about the controls and how they work. Now we will explain how to set your appliance. You will learn about what happens when you switch the appliance on and off, and how to select the operating mode.

Switching the appliance on and off

Touch the ⏻ touch button to switch the appliance on or off.

After switching off the appliance, on the display you can see if the residual heat in the cooking compartment is high or low.

Display	Meaning
-H-	Residual heat high (above 120 °C)
-h-	Residual heat low (between 60 °C and 120 °C)

Notes

- Certain displays and notes, such as the residual heat in the cooking compartment, remain visible on the display even when the appliance is switched off.
- After an appliance operation, the cooling fan runs on audibly until the cooking compartment has been cooled as far as possible.
- Switch off your device when you do not need to use it. If no settings are applied for a long time, the appliance switches itself off automatically.

Setting and starting the appliance operation

Example: CircoTherm hot air at 170 °C

1. Touch the ⏻ touch button to switch on the appliance.
   You are taken directly to the menu for the types of heating.

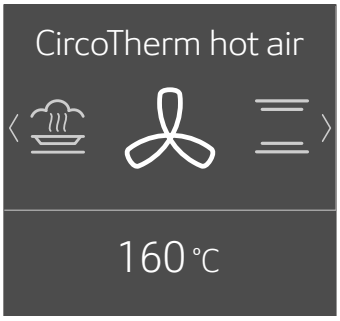

2. Use the 〈 or 〉 button to select the type of heating.
3. Use the ﹀ button to navigate to the next line.
4. Use the 〈 or 〉 button to select the temperature.

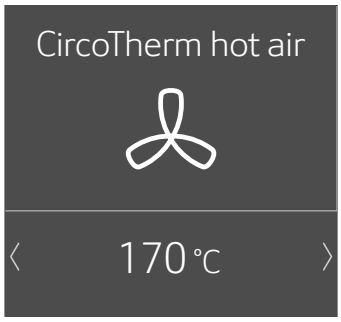

   Note: Depending on the operating mode, different settings are available. For each further setting, use the ﹀ button to navigate to the next line. Use the 〈 or 〉 button to select the setting.
5. Touch the ⏯ touch button to start the appliance operation.
   The heating bar and run time appear on the display.

Note: If you would like to go directly to the ⌂ main menu after switching on the appliance, you can select the main menu under "Operation after switching on" in the basic settings chapter. ⟶ *"Basic settings" on page 16*

Default values

The appliance suggests a temperature or setting for each type of heating. You can accept this value or change it in the appropriate area.

Heating bar

As soon as a type of heating has started, the heating bar appears on the display.The heating bar shows the temperature increase in the cooking compartment.

Run time

When a type of heating has been started, the run time is displayed. The run time counts upwards during the operation. You can therefore check how long the operation has already been running.

Displaying the current temperature

To show the current temperature on the display, press the ℹ touch button.

The current temperature is shown briefly only when heating up.

Further information

If the ℹ touch button lights up, information can be displayed. Touch the ℹ touch button to do this. The information is displayed for a few seconds.

Changing or cancelling the appliance operation

Changing the appliance operation

1. Use the ▷|| button to stop the operation.
2. Use the ﹀ or ﹀ button to navigate to the line for the setting that should be changed.
3. Use the 〈 or 〉 button to change the setting.
4. Use the ▷|| touch button to start the changed operation.

Notes

- The cooling fan may continue to run while an operation is interrupted.
- After a temperature change, the paused running time continues to count. After a change in the type of heating, the running time starts again from zero.

Cancelling the appliance operation

Press and hold the ▷|| touch button until the appliance operation is cancelled.

Note: Operating modes such as the cleaning function cannot be cancelled.

Heating up the appliance quickly

You can use the "Rapid heat-up" and "PowerBoost" functions to reduce the preheat time. Whether the appliance is preheated with the "Rapid heat-up" function or the "PowerBoost" function depends on the type of heating that has been set. With the "PowerBoost" function, unlike with the "Rapid heat-up" function, you can place your food into the cold cooking compartment even before preheating has begun. Only cook on one level when using the "PowerBoost" function.

Function	Type of heating	Place the food in the cooking compartment
Rapid heat-up	Top/bottom heating	after preheating
PowerBoost*	CircoTherm hot air	before preheating
	Bread-baking setting	
* Do not use more than one level for cooking		

Notes

- If the touch button is lit, the "Rapid heat-up" or "PowerBoost" function can be activated.
- To deactivate the "Rapid heat-up" or "PowerBoost" function before it has finished, touch the touch button.

Activating the "Rapid heat-up" function

1. Set top/bottom heating and the temperature.
   Note: Set a temperature above 100 °C to allow the appliance to preheat quickly.
2. Touch the ▷|| touch button to start the appliance operation.
3. Touch the touch button to activate the "Rapid heat-up" function.
   The symbol appears on the display.
4. Once the set temperature has been reached, the "Rapid heat-up" function switches itself off automatically. The symbol disappears from the display. Place the food in the cooking compartment

Activating the "PowerBoost" function

1. Set CircoTherm hot air or the bread baking setting and the temperature.
   Note: Set a temperature above 100 °C to allow the appliance to preheat quickly.
2. Place the food on a single level in the cooking compartment.
3. Touch the ▷|| touch button to start the appliance operation.
4. Touch the touch button to activate the "PowerBoost" function.
   The symbol appears on the display.
   Once the set temperature has been reached, the "PowerBoost" function switches itself off automatically. The symbol disappears from the display.

Time-setting options

Your appliance has different time-setting options.

Time-setting option		Use
🔔	Timer	The timer functions like an egg timer. The appliance does not switch on and off automatically.
|→|	Cooking time	Once the set cooking time has elapsed, the appliance switches off automatically.
→|	Ready at	The appliance switches on automatically, and once the set cooking time has elapsed and the end time has passed, it switches off automatically.

Note: If you have set a time-setting option, the time interval increases if you set a higher value. Example: You can set a cooking time of up to one hour in one-minute increments; for cooking times over one hour, you can set a cooking time in five-minute increments.

Showing and hiding the time-setting options

To show or hide the time-setting options, touch the ◷ touch button.

Note: After a particular length of time, the time-setting options that are shown are automatically hidden. If you have already set a cooking time, it will be applied.



Setting the timer

The timer can be set when the appliance is switched on or off.

1. Touch the ◷ touch button.
   The time-setting options are shown on the display.
2. Select the cooking time using the 〉 button.
   Note: When the appliance is switched on, use the ﹀ button to navigate to the Timer 🔔 line and then select the cooking time using the 〉 button.
3. Touch the ◷ touch button to start the timer.
   The 🔔 symbol appears on the display.The timer counts down.

Note: As soon as the set time has elapsed, a signal sounds. To cancel the signal tone, touch the ◷ touch button.

Setting the cooking time

Once the set cooking time has elapsed, the appliance switches off automatically. The function can only be used in combination with a type of heating.

1. Touch the ⏻ touch button.
2. Set the type of heating and temperature.
3. Touch the ◷ touch button.
   The time-setting options are shown in the display.
4. Use the 〈 or 〉 button to set the cooking time.
   – Default value for the 〈 button = 10 minutes
   – Default value for the 〉 button = 30 minutes
5. Touch the ▷|| touch button to start the set cooking time.

As soon as the cooking time has elapsed, an audible signal sounds and the appliance ends the operation automatically. Touch the ◷ touch button to end the audible signal.

Start delay – "Ready at"

The appliance switches on automatically and switches off at the preset end time.To do this, set the cooking time and determine the end time for the operation.

The start delay can only be used in combination with a type of heating.

Notes

- Ensure that food is not left in the cooking compartment for too long as it may spoil.
- It is not possible to start every type of heating with a start delay.

1. Slide food into the cooking compartment on a suitable accessory and close the appliance door.
2. Touch the ⏻ touch button.
3. Set the type of heating and temperature.
4. Touch the ◷ touch button.
   The time-setting options are shown on the display.
5. Select the cooking time using the 〉 button.
6. Use the ﹀ button to navigate to the "→| Ready at" line.
7. Select the end time using the 〉 button.
8. Touch the ▷|| touch button.
   The appliance waits until the appropriate time to start the operation.

As soon as the end time has passed, a signal sounds and the appliance stops the operation automatically. To cancel the signal tone, touch the ◷ touch button.

Checking, changing or deleting settings

1. Touch the ◷ touch button.
   The time-setting options are shown on the display.
2. Use the ﹀ or ﹀ button to navigate through the lines.
3. If necessary, change the setting using the 〈 or 〉 button. Set "00:00" to delete a time function.
   The setting is applied automatically.

Childproof lock

Your appliance is equipped with a childproof lock so that children cannot switch it on accidentally or change any settings.

Your appliance has two different locks.

Lock	Activate/deactivate
Automatic childproof lock	Via the Settings menu ⟶ *"Basic settings" on page 16*
One-time childproof lock	Via the ◷ touch button

Note: As soon as you activate the childproof lock, the control panel is locked. The ◷ and ⏻ touch buttons are not included.You can deactivate the childproof lock at any time.

Automatic childproof lock

The control panel is locked so that the appliance cannot be switched on. To switch it on, the automatic childproof lock must be interrupted. After the appliance operation, the control panel is locked automatically.

Activating

1. Touch the ⏻ touch button.
2. Touch the ⌂ touch button.
3. Use the 〈 or 〉 button to select the "Settings".
4. Use the ﹀ button to navigate to the next line.
5. Use the 〈 or 〉 button to select "Automatic childproof lock".
6. Use the ﹀ button to navigate to the next line.
7. Use the 〈 or 〉 button to select "Activated".
8. Touch the ⌂ touch button.
9. Use the ﹀ button to navigate to the next line to save the setting.
   The "Automatic childproof lock" is activated. The ⊸ symbol appears on the display after switching off the appliance.

Cancelling

1. Press and hold the ◷ touch button until "Childproof lock deactivated" appears on the display.
2. Touch the ⏻ touch button.
3. Switch on the required appliance operation.

Deactivating

1. Press and hold the ◷ touch button until "Childproof lock deactivated" appears on the display.
2. Touch the ⏻ touch button.
3. Touch the ⌂ touch button.
4. Use the 〈 or 〉 button to select the "Settings".
5. Use the ﹀ button to navigate to the next line.
6. Use the 〈 or 〉 button to select "Automatic childproof lock".
7. Use the ﹀ button to navigate to the next line.
8. Use the 〈 or 〉 button to select "Deactivated".
9. Touch the ⌂ touch button.
10. Use the ﹀ button to navigate to the next line to save the setting.
    The "Automatic childproof lock" is deactivated.
11. Touch the ⏻ touch button.

One-time childproof lock

The control panel is locked so that the appliance cannot be switched on. To switch it on, the one-time childproof lock must be deactivated. After the appliance is switched off, the control panel is no longer locked.

Activating and deactivating

1. Press and hold the ◷ touch button until "Childproof lock activated" appears on the display.
   The childproof lock is activated.
2. Press and hold the ◷ touch button until "Childproof lock deactivated" appears on the display.
   The childproof lock is deactivated.

Basic settings

There are various settings available to you in order to help use your appliance effectively and simply. You can change these settings as required.

Changing the basic settings

1. Touch the ⏻ touch button.
2. Touch the ⌂ touch button.
3. Use the 〈 or 〉 button to select the "⚙ Settings".
4. Use the ﹀ button to navigate to the next line.
5. Use the 〈 or 〉 button to select the setting.
6. Use the ﹀ button to navigate to the next line.
7. Use the 〈 or 〉 button to select the setting.
8. Touch the ⌂ touch button.
9. To save the setting, use the ﹀ button to select "Save".
   To discard the setting, use the ﹀ button to select "Discard".

List of basic settings

Setting	Selection
Language	Select language
Time of day	Sets the current time
Date	Sets the current date
Favourites	Set the heating types that should be shown in the heating types menu ⟶ *"Setting favourites" on page 16*
Audible signal duration	Short
	Medium
	Long
Button tone	Switched off (Exception: The button tone for the ⏻ touch button remains switched on)
	Switched on
Display brightness	Adjustable across 5 levels
Clock display	Digital
	Off
Lighting	On during operation
	Off during operation
Childproof lock*	Only key lock
	Door lock and key lock
Automatic childproof lock	Deactivated
	Activated
Action after switching on	Main menu
	Heating types
Night-time dimming	Switched off
	Switched on (display dimmed between 10 p.m. and 5.59 a.m.)
Brand name logo	Display
	Do not display
Fan run-on time	Recommended
	Minimum
Pull-out system	No
	Yes (double or triple pull-out system retro-fitted)
Factory settings	Load

*) Depending on the appliance model, this basic setting cannot be selected

Setting favourites

You can set which heating types are shown in the Types of heating menu.

Note: The "CircoTherm hot air", "Circo-roasting" and "Grill, large area" types of heating are always shown in the Types of heating menu. They cannot be deactivated.

1. Touch the ⏻ touch button.
2. Touch the ⌂ touch button.
3. Use the 〈 or 〉 button to select the "⚙ Settings".
4. Use the ﹀ button to navigate to the next line.
5. Use the 〈 or 〉 button to select "Favourites".
6. Use the ﹀ button to navigate to the next line.
7. Use the 〈 or 〉 button to select the type of heating.
8. Use the ﹀ button to navigate to the next line.
9. Use the 〈 or 〉 button to select "Activated" or "Deactivated".
   Note: If you have selected "Activated", the type of heating is shown in the Types of heating menu. If you have selected "Deactivated", the type of heating is shown in the Types of heating menu.
10. Touch the ⌂ touch button.
11. To save the setting, use the ﹀ button to select "Save".
    To discard the setting, use the ﹀ button to select "Discard".

Sabbath mode

You can set a time of up to 74 hours using Sabbath mode. The food in the cooking compartment remains warm, without you having to switch the appliance on or off.

Starting Sabbath mode

Before you can use Sabbath mode, you must activate it under "Favourites" in the basic settings. ⟶ *"Setting favourites" on page 16*

Once the Sabbath mode has been activated, you can select it under the menu for the types of heating.

The appliance heats up with top/bottom heating.The temperature can be set between 85 °C and 140 °C.

1. Touch the ⏻ touch button.
2. Use the 〈 or 〉 button to select "Sabbath mode".
3. Use the ﹀ button to navigate to the next line.
4. Use the 〈 or 〉 button to select the temperature.
5. Use the ﹀ button to navigate to the next line.
6. Use the 〈 or 〉 button to select the cooking time.
7. Touch the ⏵|| touch button.
   The appliance starts the operation.

Notes

- Once Sabbath mode has started, you can no longer change any settings or cancel the operation using the ⏵|| touch button.
- The operation is not interrupted if you open the appliance door.

Once the Sabbath mode duration has elapsed, a signal sounds. The appliance stops heating. Use the ⏻ touch button to switch off the appliance.

Cancelling Sabbath mode

Touch the ⏻ touch button to cancel Sabbath mode.

Cleaning agent

With good care and cleaning, your appliance will retain its appearance and remain fully functioning for a long time to come. We will explain here how you should correctly care for and clean your appliance.

Suitable cleaning agents

To ensure that the different surfaces are not damaged by using the wrong cleaning agent, observe the information in the table. Depending on the appliance model, not all of the areas listed may be on/in your appliance.

Caution!
Risk of surface damage
Do not use:

- Harsh or abrasive cleaning agents,
- Cleaning agents with a high alcohol content,
- Hard scouring pads or cleaning sponges,
- High-pressure cleaners or steam cleaners,
- Special cleaners for cleaning the appliance while it is hot.

Wash new sponge cloths thoroughly before use.

Tip: Highly recommended cleaning and care products can be purchased through the after-sales service. Observe the respective manufacturer's instructions.

⚠ Warning
Risk of burns!
The appliance becomes very hot. Never touch the interior surfaces of the cooking compartment or the heating elements. Always allow the appliance to cool down. Keep children at a safe distance.

Area	Cleaning
Appliance exterior	
Stainless steel front	Hot soapy water: Clean with a dish cloth and then dry with a soft cloth. Remove flecks of limescale, grease, starch and albumin (e.g. egg white) immediately. Corrosion can form under such flecks. Special stainless steel cleaning products suitable for hot surfaces are available from our after-sales service or from specialist retailers. Apply a very thin layer of the cleaning product with a soft cloth.
Plastic	Hot soapy water: Clean with a dish cloth and then dry with a soft cloth. Do not use glass cleaner or a glass scraper.
Painted surfaces	Hot soapy water: Clean with a dish cloth and then dry with a soft cloth.
Control panel	Hot soapy water: Clean with a dish cloth and then dry with a soft cloth. Do not use glass cleaner or a glass scraper.

Door panels	Hot soapy water: Clean with a dish cloth and then dry with a soft cloth. Do not use a glass scraper or a stainless steel scouring pad.
Door handle	Hot soapy water: Clean with a dish cloth and then dry with a soft cloth. If descaler comes into contact with the door handle, wipe it off immediately. Otherwise, any stains will not be able to be removed.
Appliance exterior	
Enamel surfaces	Hot soapy water or a vinegar solution: Clean with a dish cloth and then dry with a soft cloth. Soften baked-on food residues with a damp cloth and soapy water. If there are heavy deposits of dirt, use a stainless steel scouring pad or oven cleaner. Leave the cooking compartment open to dry after cleaning. It is best to use the cleaning function. ⟶ *"Cleaning function" on page 19*
Glass cover for the interior lighting	Hot soapy water: Clean with a dish cloth and then dry with a soft cloth. If the cooking compartment is heavily soiled, use oven cleaner.
Stainless steel door cover	Stainless steel cleaner: Observe the manufacturer's instructions. Do not use stainless steel care products. Remove the door cover for cleaning.
Rails	Hot soapy water: Soak and clean with a dish cloth or brush.
Pull-out system	Hot soapy water: Clean with a dish cloth or a brush. Do not remove the lubricant while the pull-out rails are pulled out – it is best to clean them when they are pushed in. Do not clean in the dishwasher.
Accessories	Hot soapy water: Soak and clean with a dish cloth or brush. If there are heavy deposits of dirt, use a stainless steel scouring pad.

Notes
- Slight differences in colour on the front of the appliance are caused by the use of different materials, such as glass, plastic and metal.
- Shadows on the door panels, which look like streaks, are caused by reflections made by the interior lighting.
- Enamel is baked on at very high temperatures.This can cause some slight colour variation. This is normal and does not affect operation.
  The edges of thin trays cannot be completely enamelled. As a result, these edges can be rough. This does not impair the anti-corrosion protection.

Keeping the appliance clean

Always keep the appliance clean and remove dirt immediately so that stubborn deposits of dirt do not build up.

Tips
- Clean the cooking compartment after each use. This will ensure that dirt cannot be baked on.
- Always remove flecks of limescale, grease, starch and albumin (e.g. egg white) immediately.
- Use the universal pan for baking very moist cakes.
- Use suitable ovenware for roasting, e.g. a roasting dish.
- Where possible, use Circotherm hot air. This type of heating creates less dirt.

Cleaning function

Your appliance is equipped with a self-cleaning function and EasyClean. You can use the self-cleaning function to clean the cooking compartment. Use the EasyClean cleaning aid for intermediate cleaning of the cooking compartment. Dirt is softened beforehand using EasyClean. It can then be removed more easily.

Self-cleaning

You can use the "Self-cleaning" operating mode to clean the cooking compartment effortlessly. The cooking compartment is heated up to a very high temperature. Residues from roasting, grilling and baking will burn.

You can choose from three cleaning settings.

Setting	Cleaning level	Duration
1	Light	Approx. 1 hour, 15 minutes
2	Medium	Approx. 1 hour, 30 minutes
3	Intensive	Approx. 2 hours

The dirtier the cooking compartment and the longer the dirt has been there, the higher the cleaning setting should be. It is sufficient to clean the cooking compartment every two to three months. If required, you can clean the oven more frequently. A cleaning cycle requires only approx. 2.5 – 4.7 kilowatt hours.

Note: For your safety, the cooking compartment door locks automatically. It cannot be opened again until the 🔒 symbol for the locking mechanism goes out in the status bar. The interior lighting remains off during cleaning.

⚠ Warning
Risk of burns!
- The cooking compartment becomes extremely hot during the cleaning function. Never open the appliance door or move the locking latch by hand. Allow the appliance to cool down. Keep children away from the appliance.
- ⚠ The appliance will become very hot on the outside during the cleaning function. Never touch the appliance door. Allow the appliance to cool down. Keep children away from the appliance.

Prior to initiating the cleaning function

While cleaning is in progress, you can clean an accessory at the same time, e.g. the universal pan or the baking tray. Before cleaning is started, remove the worst dirt. Slide the accessory in at level 2.

Clean the inside of the appliance door and along the surface edges of the cooking compartment in the area around the seal. Do not scrub the seal.

Note: When using the cleaning function, you can clean the enamel accessory provided at the same time. You cannot clean any of the wire racks when using the cleaning function. The wire racks are not suitable for cleaning using the cleaning function; this will discolour them. Further accessories suitable for cleaning using the cleaning function are listed in the table for special accessories. ⟶ *"Accessories" on page 9*

⚠ Warning
Risk of fire!
- Loose food residues, grease and meat juices may catch fire during the cleaning function. Before starting the cleaning function, remove coarse dirt from the cooking compartment and from the accessories.
- The appliance will become very hot on the outside during the cleaning function. Never hang combustible objects, e.g. tea towels, on the door handle. Do not place anything against the front of the appliance. Keep children away from the appliance.

⚠ Warning
Risk of serious damage to health!
The appliance will become very hot during the cleaning function. The non-stick coating on baking trays and tins is destroyed and noxious gases are released. Never clean non-stick baking trays and baking tins using the cleaning function. Only clean enamelled accessories using the cleaning function.

Starting

1. Touch the ⏻ touch button.
2. Touch the ⌂ touch button.
3. Use the 〈 or 〉 button to select "Self-cleaning".
4. Use the ﹀ button to navigate to the next line.
5. Use the 〈 or 〉 button to select the cleaning setting.
   Note: Once it has started, the cleaning setting can no longer be changed.
6. Use the ﹀ button to navigate to the next line.
7. Touch the ⏯ touch button.
   The appliance starts self-cleaning.

During self-cleaning, the appliance door is locked automatically. The 🔒 symbol appears on the display.

Note: If you would like to start self-cleaning later, set an end time.

Cancelling

Touch the ⏻ touch button to cancel. The appliance door cannot be opened until the 🔒 symbol goes out.

Finishing

As soon as self-cleaning has run through, a signal sounds. The appliance door cannot be opened until the 🔒 symbol goes out.

Once the cleaning function has ended

Once the cooking compartment has cooled down, wipe off the ash that has been left behind in the cooking compartment and around the appliance door with a damp cloth.

EasyClean

The EasyClean cleaning aid makes it easier to clean the cooking compartment. Dirt is softened beforehand by vaporizing soapy water. It can then be removed more easily.

⚠ Warning
Risk of scalding!
Water in a hot cooking compartment may create hot steam. Never pour water into the hot cooking compartment.

Starting

Notes
- The "EasyClean" cleaning aid can only be started once the cooking compartment is cold (room temperature) and the appliance door is closed.
- Do not open the appliance door during operation. Doing this will interrupt the "EasyClean" cleaning aid.

1. Remove the accessories from the cooking compartment.
2. Mix 0.4 litres of water (not distilled water) with a drop of washing-up liquid and pour into the middle of the cooking compartment floor.
3. Touch the ⏻ touch button.
4. Touch the touch button.
5. Use the 〈 or 〉 button to select "EasyClean".
6. Use the ﹀ button to navigate to the next line.
7. Touch the ⏯ touch button.
   The appliance starts EasyClean. The remaining time appears on the display.

Finishing

As soon as the cleaning aid has finished, an audible signal sounds and the appliance ends the operation automatically.

As soon as you open the appliance door, the interior lighting is switched on so that you can finish cleaning the cooking compartment more easily. The remaining water in the cooking compartment must be removed promptly. Do not leave the remaining water in the cooking compartment for a long time (e.g. overnight). The appliance must not be operated when the cooking compartment is still wet or damp.

Final cleaning

1. Open the appliance door and remove the remaining water with an absorbent sponge cloth.
2. Clean the smooth surfaces in the cooking compartment with a dish cloth or a soft brush. Stubborn residues can be removed using a stainless steel scouring pad.
3. Remove limescale with a cloth soaked in vinegar. Then wipe with clean water and rub dry with a soft cloth (including under the door seal).
4. Use the ⏻ touch button to switch off the appliance.
5. Leave the appliance door ajar in the locking position (approx. 30°) for approx. 1 hour to allow the enamel surfaces in the cooking compartment to dry. Alternatively, you can also run the rapid drying function for the cooking compartment.

Running the rapid drying function for the cooking compartment

1. After the cleaning aid process has finished, leave the appliance door ajar in the locking position (approx. 30°).
2. Touch the ⏻ touch button.
3. Start CircoTherm hot air at 50 °C.
4. After 5 minutes, switch off the appliance and close the appliance door.

Removing heavy deposits of dirt

You have several options for removing particularly stubborn deposits of dirt.
- Leave the soapy water to work for some time before starting the cleaning aid.
- Rub soapy water onto the dirt on the smooth surfaces before starting the cleaning aid.
- Repeat the cleaning aid once the cooking compartment has cooled down.

Rails

With good care and cleaning, your appliance will retain its appearance and remain fully functional for a long time to come. This will tell you how to remove the shelves and clean them.

Detaching and refitting the rails

⚠ Warning
Risk of burns!
The rails become very hot. Never touch the hot rails. Always allow the appliance to cool down. Keep children away from the appliance.

Detaching the rails

1. Lift the rail slightly at the front **a** and detach it **b** (figure 1).
2. Then pull the whole rail towards you and take it out (figure 2).

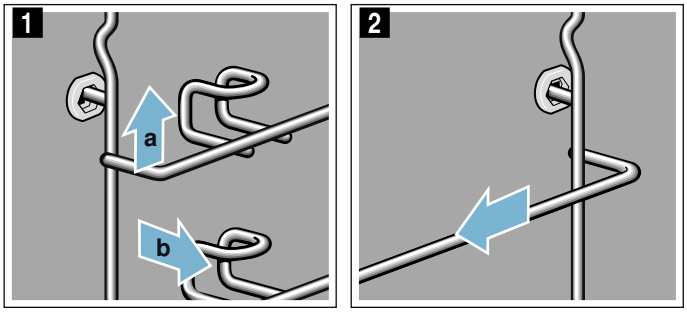

Clean the rails with cleaning agent and a sponge. For stubborn deposits of dirt, use a brush.

Attaching the rails

The rails only fit on the right or the left side. For both rails, ensure that the retaining bracket is at the front.

1. First, insert the rail in the middle of the rear socket **a**, until the rail rests against the cooking compartment wall, and push it back **b** (figure 1).
2. Then insert the rail into the front socket **c**, until the rail also rests against the cooking compartment wall here, and press it downwards **d** (figure 2).

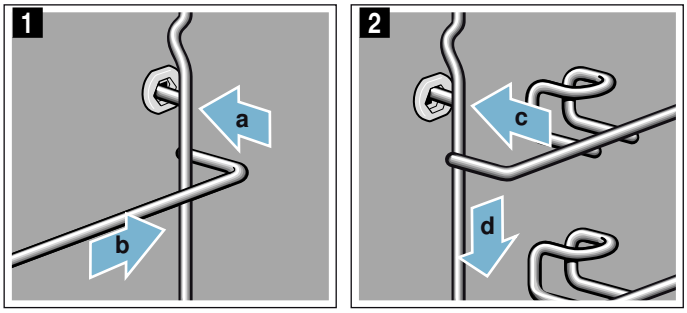

Appliance door

With good care and cleaning, your appliance will retain its appearance and remain fully functional for a long time to come. This will tell you how to remove the appliance door and clean it.

Removing and fitting the appliance door

For cleaning purposes and to remove the door panels, you can detach the appliance door.

The appliance door hinges each have a locking lever. When the locking levers are closed (figure 1), the appliance door is secured in place. It cannot be detached.
When the locking levers are open in order to detach the appliance door (figure 2), the hinges are locked. They cannot snap shut.

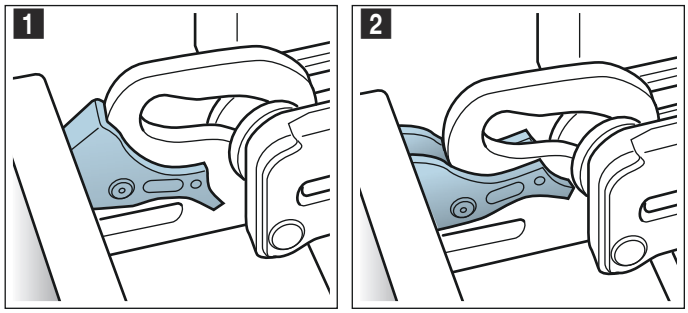

⚠ Warning
Risk of injury!
- If the hinges are not locked, they can snap shut with great force. Ensure that the locking levers are always fully closed or, when detaching the appliance door, fully open.
- The hinges on the appliance door move when opening and closing the door, and you may be trapped. Keep your hands away from the hinges.

Removing the appliance door

1. Open the appliance door fully and push it in the direction of the appliance.
2. Fold up the two locking levers on the left and right (figure 1).
3. Close the appliance door as far as it goes **a**. With both hands, grip the door on the left- and right-hand side and pull it up and out (figure 2).

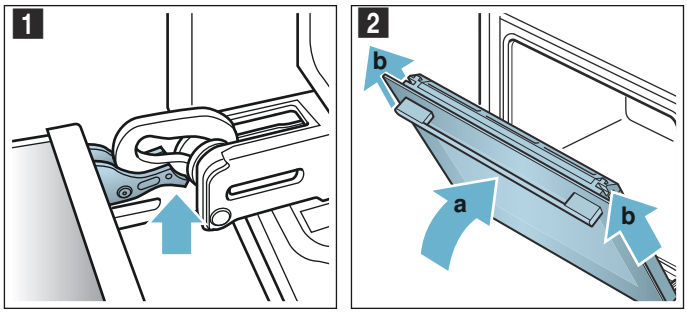

Fitting the appliance door

Reattach the appliance door in the opposite sequence to removal.

1. When attaching the appliance door, ensure that both hinges are inserted straight into the opening (figure 1).
   Place both hinges at the bottom on the outer panel and use this as a guide.
   Ensure that the hinges are inserted into the correct opening. You must be able to insert them easily and without resistance. If you can feel any resistance, check that the hinges are inserted into the correct opening.

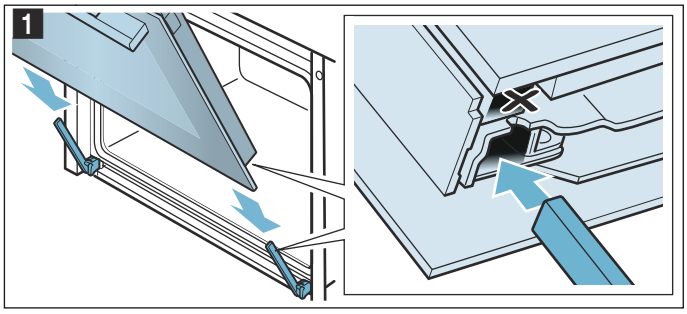

2. Open the appliance door fully. Fold both locking levers closed again (figure 2).

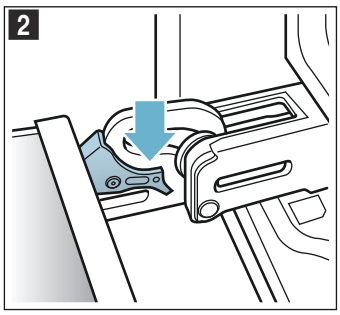

3. Close the cooking compartment door.

Removing the door cover

The stainless steel inlay in the door cover may become discoloured. To carry out thorough cleaning, you can remove the cover.

1. Open the appliance door slightly.
2. Press on the right and left side of the cover (figure 1).
3. Remove the cover (figure 2).
   Close the appliance door carefully.

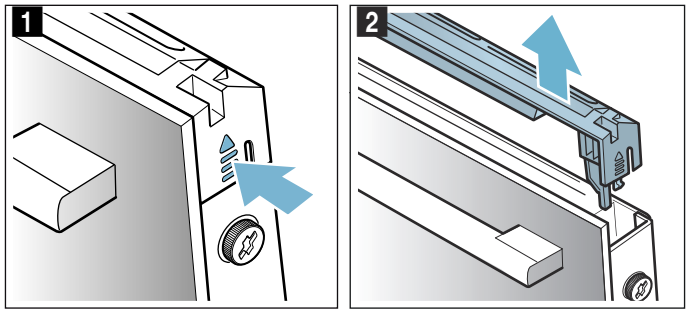

   Note: Clean the stainless steel inlay in the cover with stainless steel cleaner. Clean the rest of the door cover with soapy water and a soft cloth.
4. Open the appliance door again slightly. Put the cover back in place and press on it until it clicks audibly into place (figure 3).

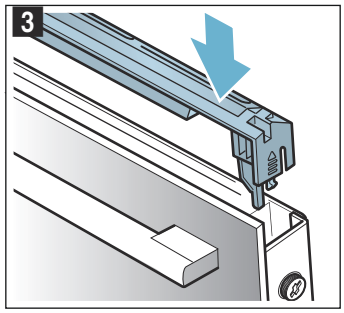

5. Close the appliance door.

Removing and installing the door panels

To facilitate cleaning, you can remove the glass panels from the appliance door.

Removing the door from the appliance

1. Open the appliance door slightly.
2. Press on the right and left side of the cover (figure 1).
3. Remove the cover (figure 2).

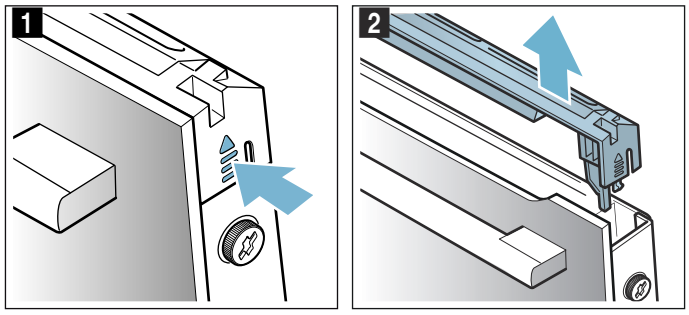

4. Loosen and remove the screws on the left and right of the appliance door (figure 3).

5. Before closing the door again, trap a tea towel which has been folded several times in the door (figure 4). Pull out the front panel upwards and lay it on a flat surface with the door handle facing downwards.

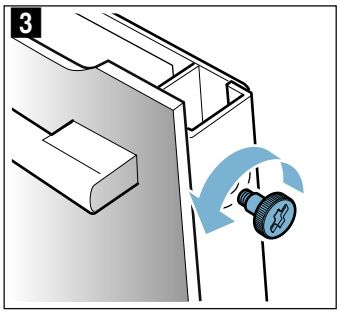

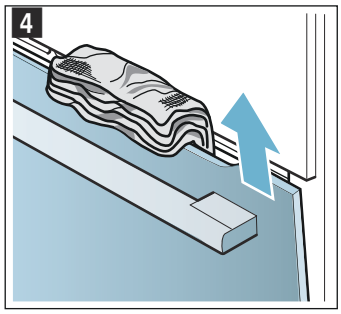

6. Push both retainers on the intermediate panel upwards, but do not remove it (figure 5). Hold the panel with one hand. Remove the panel.

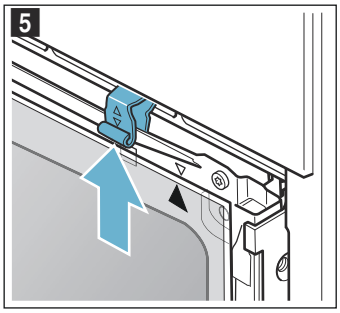

Clean the panels with glass cleaner and a soft cloth.

⚠ Warning
Risk of injury!
- Scratched glass in the appliance door may develop into a crack. Do not use a glass scraper, sharp or abrasive cleaning aids or detergents.
- The hinges on the appliance door move when opening and closing the door, and you may be trapped. Keep your hands away from the hinges.

Fitting the door on the appliance

When fitting the intermediate panel, make sure that the arrow is in the top right of the panel and that it aligns with the arrow on the metal panel.

1. Insert the intermediate panel at the bottom into the retainer and push it in firmly at the top (figure 1).
2. Push both retainers downwards (figure 2).

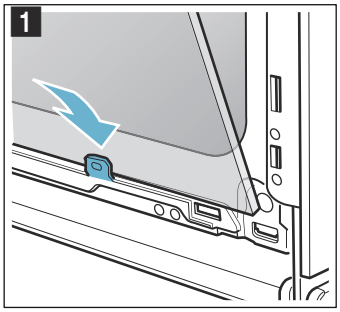

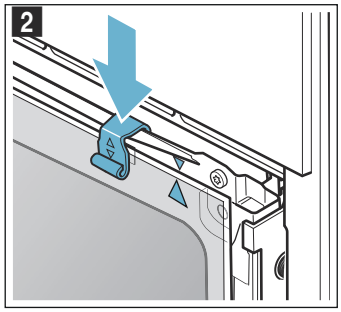

3. Insert the front panel at the bottom into the retainers (figure 3).
4. Close the front panel until both upper hooks are opposite the opening (figure 4).

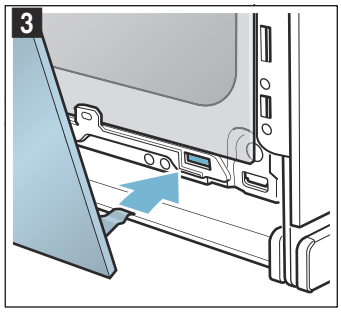

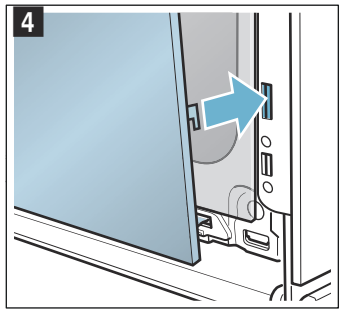

5. Press the front panel at the bottom until it clicks audibly into place (figure 5).
6. Open the appliance door again slightly and remove the tea towel.
7. Screw both screws back in on the left and right.
8. Put the cover back in place and press on it until it clicks audibly into place (figure 6).

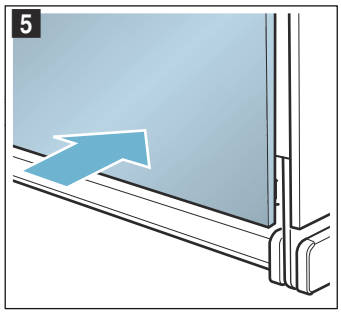

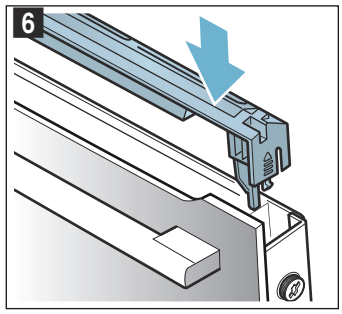

9. Close the appliance door.

Caution!
Do not use the cooking compartment again until the panels have been correctly fitted.

Trouble shooting

If a fault occurs, there is often a simple explanation. Before calling the after-sales service, please refer to the fault table and attempt to correct the fault yourself.

Tip: If a meal does not turn out exactly as you wanted, refer to the "Tested for you in our cooking studio" section.Here, you will find plenty of cooking tips and notes.

⚠ Warning
Risk of electric shock!
Incorrect repairs are dangerous. Repairs may only be carried out and damaged power cables replaced by one of our trained after-sales technicians. If the appliance is defective, unplug the appliance from the mains or switch off the circuit breaker in the fuse box. Contact the after-sales service.

Fault table

⚠ Warning
Risk of electric shock!
- Work on the appliance electronics may only be performed by a specialist.
- Always disconnect the appliance from the power supply when work is carried out on the electronics. Switch off the circuit breaker or remove the fuse from your household fuse box.

Fault	Possible cause	Notes/remedy
The appliance does not work	The plug is not plugged into the mains	Connect the appliance to the power supply
	Power cut	Check whether other kitchen appliances are working
	The circuit breaker is faulty	Check in the fuse box to make sure that the fuse for the appliance is OK
After switching on an operating mode, a message is shown on the display which indicates that the temperature is too high	The appliance has not cooled down sufficiently	Allow the appliance to cool down and switch the operating mode on again
The appliance cannot be switched on; the ⊸ symbol is shown on the display	The automatic childproof lock is activated	Press and hold the ◷ touch button until the ⊸ symbol goes out
The appliance cannot be operated when it is switched on; the ⊸ symbol is shown on the display	The childproof lock is activated	Press and hold the ◷ touch button until the ⊸ symbol goes out
The appliance does not heat up; ▭ is shown on the display	Demo mode is activated in the basic settings	Disconnect the appliance from the mains for approx. 10 seconds (switch off the circuit breaker in the fuse box) and then deactivate demo mode in the basic settings within 3 minutes → *"Basic settings" on page 16*
The appliance door cannot be opened; the 🔒 symbol is shown on the display	The appliance door is locked until the cooking compartment has cooled down	Wait until the 🔒 symbol goes out
	The childproof lock locks the appliance door	Press and hold the ◷ touch button until the 🔒 symbol goes out; adjust the childproof lock setting
"EXXXX" appears on the display, e.g. "E0111"	Technical problem	Switch the appliance off and back on again If the message appears again, call the after-sales service

Maximum operating time exceeded

Your appliance ends the operation automatically when no cooking time is set and the setting has not been changed for a long time.

The actual cooking time until the operation is stopped automatically varies according to the selected settings.

The appliance display indicates that the operation will end automatically. Afterwards, the operation is stopped.

To use the appliance again, switch it off beforehand. Then switch the appliance on again and set the required operation.

Replacing the bulb in the top of the cooking compartment

If the cooking compartment light bulb fails, it must be replaced. Heat-resistant, 40 watt, 230 V halogen bulbs are available from the after-sales service or specialist retailers.

When handling the halogen bulb, use a dry cloth. This will increase the service life of the bulb. Only use these bulbs.

⚠ Warning
Risk of electric shock!
When replacing the cooking compartment bulb, the bulb socket contacts are live. Before replacing the bulb, unplug the appliance from the mains or switch off the circuit breaker in the fuse box.

⚠ Warning
Risk of burns!
The appliance becomes very hot. Never touch the interior surfaces of the cooking compartment or the heating elements. Always allow the appliance to cool down. Keep children at a safe distance.

1. Place a tea towel in the cold cooking compartment to prevent damage.
2. Turn the glass cover anti-clockwise to remove it (figure **1**).
3. Pull out the bulb – do not turn it (figure **2**). Insert the new bulb, making sure that the pins are in the correct position. Push the bulb in firmly.

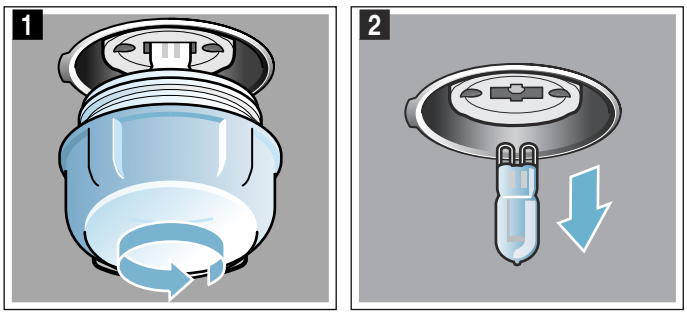

4. Screw the glass cover back in.
5. Remove the tea towel and switch on the circuit breaker.

Glass cover

If the glass cover of the halogen bulb is damaged, it must be replaced. You can obtain a new glass cover from the after-sales service. Please specify the E number and FD number of your appliance.

Customer service

Our after-sales service is there for you if your appliance needs to be repaired. We will always find an appropriate solution, also in order to avoid after-sales personnel having to make unnecessary visits.

E number and FD number

When calling us, please give the full product number (E no.) and the production number (FD no.) so that we can provide you with the correct advice. The rating plate bearing these numbers can be found when you open the appliance door.

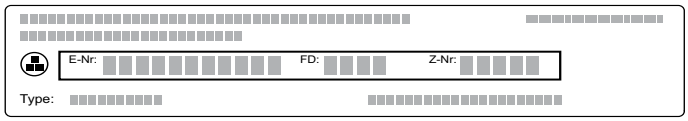

To save time, you can make a note of the number of your appliance and the telephone number of the after-sales service in the space below, should it be required.

E no.	**FD no.**

After-sales service ☎

Please note that a visit from an after-sales service engineer is not free of charge, even during the warranty period.

Please find the contact data of all countries in the enclosed customer service list.

To book an engineer visit and product advice
GB 0344 892 8989
Calls charged at local or mobile rate.
IE 01450 2655
0.03 € per minute at peak. Off peak 0.0088 € per minute.

Rely on the professionalism of the manufacturer. You can therefore be sure that the repair is carried out by trained service technicians who carry original spare parts for your appliances.

Tested for you in our cooking studio

Here, you can find a selection of dishes and the ideal settings for them. We will show you which type of heating and temperature are best suited to your dish. You will get information on suitable cooking accessories and the height at which they should be placed in the oven. You will also get tips about cookware and preparation methods.

Note: A lot of steam can build up in the cooking compartment when cooking food.
Your appliance is very energy-efficient and radiates very little heat to its surroundings during operation. Due to the high difference in temperature between the appliance interior and the external parts of the appliance, condensation may build up on the door, control panel or adjacent kitchen cabinet panels. This is a normal physical phenomenon. Condensation can be reduced by preheating the oven or opening the door carefully.

Silicone moulds

For the best cooking results, we recommend dark-coloured metal baking tins/dishes.

Nevertheless, if you wish to use silicone moulds, follow the manufacturer's instructions and recipes. Silicone moulds are often smaller than normal baking tins. Quantity and recipe specifications may vary.

Baking

Here, you can find recommended settings for many dishes.

Also refer to the notes in the section on allowing dough to rise.

Only use original accessories supplied with your appliance. These have been tailored to the cooking compartment and the operating modes of your appliance.

Shelf positions

Use the indicated shelf positions.

Baking on one level
When baking on one level, use the following shelf positions:
- Tall baked items: Level 2
- Flat baked items: Level 3

If you are using CircoTherm Hot air as the type of heating, you can choose between levels 1, 2, 3 and 4.

You can also prepare soufflés in a water bath in the universal pan. To do so, slide the universal pan in at level 2.

Baking on two levels
Use CircoTherm. Baked items that are placed into the oven on trays or in baking tins/dishes at the same time will not necessarily be ready at the same time.
- Universal pan: Level 3
  Baking tray: Level 1
- Baking tins/dishes on the wire rack
  First wire rack: Level 3
  Second wire rack: Level 1

By preparing several dishes at the same time, you can make energy savings of up to 45 per cent. Position baking tins/dishes next to one another or offset and vertically stacked in the cooking compartment.

Accessories

Ensure that you always use suitable accessories and that they are placed in the oven the right way around.

Wire rack
Insert the wire rack with the open side facing the appliance door and the outer rail pointing downwards .

Universal pan or baking tray
Slide the universal pan or the baking tray in carefully as far as the limit stop with the bevelled edge facing the appliance door.

When baking moist cakes or pastries with many toppings, use the universal pan so that any excess liquid does not overflow and make the cooking compartment dirty.

Baking tins
Dark- coloured metal baking tins are most suitable.

Tinplate baking tins, ceramic dishes and glass dishes extend baking time and mean that the baked item will not brown evenly. If you wish to bake using these baking tins/dishes and using top/bottom heating, slide in the tin/dish at level 1.

Greaseproof paper
Only use greaseproof paper that is suitable for the selected temperature. Always cut greaseproof paper to size.

Recommended setting values

You can find the ideal heating type for various pastries in the table. The temperature and baking time are dependent on the quantity and composition of the dough. Different settings ranges are indicated for this reason. Try using the lower values at first. A lower temperature results in more even browning. If necessary, use a higher setting the next time.

Note: Baking times can not be reduced by using higher temperatures. Cakes or small baked items would only be cooked on the outside, and would not be fully baked in the middle.

The setting values apply to dishes placed into a cold cooking compartment. By doing so, you can make energy savings of up to 20 per cent. If you preheat the oven, you can reduce the indicated baking times by several minutes.

Preheating is necessary for selected dishes, and this is indicated in the table.

If you wish to follow one of your own recipes when baking, you should use a similar baked item in the table as a reference. You can find additional information in the tips on baking attached to the settings table.

Remove unused accessories from the cooking compartment. This will achieve the best possible cooking results and energy savings of up to 20 per cent.

Types of heating used:
- CircoTherm hot air
- Top/bottom heating
- Pizza setting
- Bread baking setting

Dish	Accessories/cookware	Shelf position	Type of heating	Temperature in °C	Cooking time in mins.
One level baking					
Victoria sponge cake	2x Ø20 cm tins	2		160-170*	25-30
Light fruit cake	high Ø20 cm tin	2		140-160*	70-90
Rich fruit cake	high Ø23 cm tin	2		130-150*	150-180
Fruit crumble	flat glass dish	3		150-170*	35-45
Sponge Cake (fatless), 3 eggs	springform cake tin Ø26 cm	2		160-170*	25-35
Sponge flan, 6 eggs	springform cake tin Ø28 cm	2		150-170*	30-50
Swiss roll	swiss roll tin	3		180-190*	10-15
Tart	plate Ø20 cm or pie tin	2		160-170*	50-60
Tart	plate Ø20 cm or pie tin	2		170-190*	50-65
Quiche	quiche tin (dark coated)	3		190-210	30-40
(White) Bread	loaf tin (1x 900 g or 2x 450 g)	2		190-210*	25-40
(White) Bread	loaf tin (1x 900 g or 2x 450 g)	2		180-200*	20-30
Scones	baking tray	3		180-200*	10-14
Scones	baking tray	3		190-200	10-14
Biscuits	baking tray	3		140-160*	10-25
Biscuits	baking tray	3		150-170	10-20
Small Cakes	12-cup-tin	3		140-160*	20-30
Small Cakes	12-cup-tin	3		150-170	20-30
Puff pastry slices	baking tray	3		170-190*	20-35
Jam tarts	12-cup-tin	3		170-190*	15-30
Jam tarts	12-cup-tin	3		180-200	15-25
Meringue	baking tray	3		80-90*	120-150
Pavlova	baking tray	3		90-100*	120-180
Soufflé	1,2L-soufflé dish	2		160-170*	35-45
Soufflé	individual moulds	2		170-190	65-75
Choux pastry	baking tray	3		190-210*	30-40
Pie	rectangular pie tin	2		190-200	30-45
Pie	rectangular pie tin	2		170-190	50-70
Yorkshire pudding	12-cup-tin	3		200-220*	15-25
Jacket potatoes	baking tray	3		150-170*	75-90
Pizza, homemade	baking tray	3		200-220	25-35
Pizza, homemade	baking tray	3		200-220	25-35
Pizza, homemade, thin base	pizza tray	2		250-270	20-25
Pizza, homemade, thin base	pizza tray	2		210-220	25-30
Multishelf baking					
Victoria Sponge Cake, 2 levels	4x Ø20 cm tins	3+1		160-170*	25-35
Scones, 2 levels	2 baking trays	3+1		170-190*	12-16

* Preheat

Dish	Accessories/cookware	Shelf position	Type of heating	Temperature in °C	Cooking time in mins.
Biscuits, 2 levels	2 baking trays	3+1		140-160*	10-25
Biscuits, 3 levels	3 baking trays	4+3+1		140-160*	15-30
Small cakes, 2 levels	2x 12-cup-tins	3+1		140-160*	22-32
Puff pastry slices, 2 levels	2 baking trays	3+1		170-190*	25-45
Puff pastry slices, 3 levels	3 baking trays	4+3+1		170-190*	25-45
Jam tarts, 2 levels	2x 12-cup-tins	3+1		170-190*	20-35
Meringues, 2 levels	2 baking trays	3+1		80-90*	120-150
Jacket potatoes, 2 levels	universal pan + baking tray	3+1		150-170*	75-90
(White) Bread, 2 levels	4x loaf tins	3+1		170-190*	30-40
Pizza, homemade, 2 levels	universal pan + baking tray	3+1		180-200	35-45
* Preheat					

Tips on baking

You want to find out whether the cake is completely cooked in the middle.	Push a cocktail stick into the highest point on the cake. If the cocktail stick comes out clean with no dough residue, the cake is ready.
The cake collapses.	Next time, use less liquid. Alternatively, set the temperature to be 10 °C lower and extend the baking time. Adhere to the specified ingredients and preparation instructions in the recipe.
The cake has risen in the middle but is lower around the edge.	Only grease the base of the springform cake tin. After baking, loosen the cake carefully with a knife.
The fruit juice overflows.	Next time, use the universal pan.
Small baked items stick to one another during baking.	There should be a gap of approx. 2 cm around each item. This gives enough space for the baked items to expand well and brown on all sides.
The cake is too dry.	Set the temperature 10 °C higher and shorten the baking time.
The cake is generally too light in colour.	If the shelf position and the cookware are correct, then you should increase the temperature if necessary or extend the baking time.
The cake is too light on top, and too dark underneath.	Bake the cake one level higher in the oven the next time.
The cake is too dark on top, and too light underneath.	Bake the cake one level lower in the oven the next time. Select a lower temperature and extend the baking time.
Cakes baked in a tray or tin are too brown at the back.	Place the baking tray in the middle of the accessories, not directly against the back wall.
The whole cake is too dark.	Select a lower temperature next time and extend the baking time if necessary.
The cake is unevenly browned.	Select a slightly lower temperature. Protruding greaseproof paper can affect the air circulation. Always cut greaseproof paper to size. Ensure that the baking tin does not stand directly in front of the openings in the cooking compartment back wall. When baking small items, you should use similar sizes and thicknesses wherever possible.
You were baking on several levels. The items on the top baking tray are darker than those on the lower baking tray.	Always use CircoTherm when baking on several levels. Baked items that are placed into the oven on trays or in baking tins/dishes at the same time will not necessarily be ready at the same time.
The cake looks good, but is not cooked properly in the middle.	Use a lower temperature and bake slightly longer; if necessary, add slightly less liquid. For cakes with a moist topping, bake the base first. Sprinkle it with almonds or breadcrumbs and then place the topping on top.
The cake cannot be turned out of the dish when it is turned upside down.	Allow the cake to cool down for 5 to 10 minutes after baking. If it still sticks, carefully loosen the cake around the edges again using a knife. Turn the cake tin upside down again and cover it several times with a cold, wet cloth. Next time, grease the baking tin/dish and sprinkle with breadcrumbs.

Roasting and braising

Here, you can find information on roasting and braising poultry and meat. You can find the ideal settings for many dishes in the settings tables.

Poultry

For duck or goose, pierce the skin on the underside of the wings. This allows the fat to run out.

If using duck breast, score the skin. Do not turn duck breasts.

When you turn poultry, ensure that the breast side or the skin side is underneath at first.

Poultry will turn out particularly crispy and brown if you baste it towards the end of the roasting time with butter, salted water or orange juice.

Meat
Baste lean meat with fat as required or cover it with strips of bacon.

Score the rind crosswise. If you turn the joint when cooking, ensure that the rind is underneath at first.

When the joint is ready, turn off the oven and allow it to rest for another 10 minutes in the cooking compartment. This allows the meat juices to be better distributed. Wrap the joint in aluminium foil if necessary. The recommended resting time is not included in the cooking time indicated.

Roasting on the wire rack

On the wire rack, poultry and meat will become very crispy on all sides. Roasting on the wire rack is well suited for larger poultry or for multiple pieces at the same time.

Depending on the size and type of the meat, add up to ½ litres of water to the universal pan. Any dripping fat and meat juices will be caught. You can prepare a sauce using these meat juices. In addition, less smoke is generated, and the cooking compartment stays cleaner.

Slide the universal pan into the oven at the indicated shelf position with the wire rack attached. Ensure that the wire rack is correctly positioned on the universal pan. ⟶ *"Accessories" on page 9*

Roasting and braising in cookware

It is more convenient to roast and braise meat in cookware. You can take the joint out of the cooking compartment more easily in the cookware, and prepare the sauce in the cookware itself.

Only use cookware which is suitable for use in an oven. Check whether the cookware fits in the cooking compartment.

Glass cookware is most suitable. Place hot glass cookware onto a dry mat after cooking. If the surface is damp or cold, the glass may crack.

Add in a little liquid for roasting if the meat is lean. A covering of approx. ½ cm depth should be applied to the base of any glass cookware.

The amount of liquid is dependent on the type of meat, the cookware material and also on whether or not a lid is used. If preparing meat in an enamelled or dark metal roasting dish, it will need a little more liquid than if cooked in glass cookware.

The steam evaporates in the cookware when roasting. Carefully pour in more liquid if required.

Shiny roasting dishes made from stainless steel or aluminium reflect heat like a mirror and are therefore not particularly suitable. The meat cooks more slowly and will not brown so much. Use a higher temperature and/or a longer cooking time.

Observe the manufacturer's instructions for your roasting cookware.

Roasting in uncovered cookware
It is best to use a deep roasting tin/dish for roasting poultry and meat. Place the tin/dish onto the wire rack. If you do not have any suitable cookware, use the universal pan.

Braising in covered cookware
When preparing food with covered cookware, the cooking compartment remains considerably cleaner. Ensure that the lid fits well and closes properly. Place the cookware onto the wire rack.

The distance between the meat and the lid must be at least 3 cm. The meat may rise.

Very hot steam may escape when opening the lid after cooking. Lift the lid at the rear, so that the hot steam can escape away from you.

If necessary, braise the meat first by searing it. Add water, wine, vinegar or a similar liquid to the braising liquid. A covering at least 2 cm deep should be applied to the base of the cookware.

The steam evaporates in the cookware when roasting. Carefully pour in more liquid if required.

Recommended setting values

In the table, you can find the ideal heating type for poultry and meat. Temperature and cooking time depend on the quantity, composition and temperature of the food. Different settings ranges are indicated for this reason. Try using the lower values at first. You can increase the temperature next time if necessary.

The setting values are based on the assumption that unstuffed, chilled, ready-to-roast poultry and meat are placed into a cold cooking compartment. By doing so, you can make energy savings of up to 20 per cent. If you preheat the oven, the indicated cooking times will be reduced by several minutes.

In the table, you can find specifications for poultry and meat with default values for the weight. If you wish to prepare heavier poultry or meat, use the lower temperature in every case. If roasting several joints, use the weight of the heaviest piece as a basis for determining the cooking time. The individual pieces should be approximately equal in size.

A general rule: the larger the poultry or piece of meat is, the lower the cooking temperature and the longer the cooking time.

Turn the poultry and meat after approx. ½ to ⅔ of the indicated time.

Remove unused accessories from the cooking compartment. This will achieve the best possible cooking results and energy savings of up to 20 per cent.

Type of heating used:
- CircoTherm hot air

Dish	Accessories/cookware	Shelf position	Type of heating	Temperature in °C	Cooking time in mins.
Beef					
Slow roast joint	wire rack	2		130-140*	40+40
Top side / Top rump	wire rack	2		160-170*	30+25
Lamb					
Leg (bone-in)	wire rack	2		160-170*	30+25
Shoulder (bone-in)	wire rack	2		160-170*	25+20
Shoulder (boned and rolled)	wire rack	2		170-180*	25+25
Rack of lamb	wire rack	2		180-190*	25+25
Pork					
Roast joint	wire rack	2		180-190*	35+35
Loin joint	wire rack	2		170-180*	30+30
Belly	wire rack	2		160-170*	30+25
Gammon joint	wire rack	2		160-170*	30+30
Poultry					
Chicken, whole	wire rack	2		170-180*	25+25
Chicken, portion (je 200-250 g)	wire rack	2		190-200*	35-45
Chicken, quarter (je 450 g)	wire rack	2		180-190*	40-60
Duck, 2-3 kg	wire rack	2		180-190*	20+20
Turkey, crown	wire rack	2		160-170*	20+15
Turkey, drumstick	wire rack	2		160-170*	25+25
Turkey, whole, 3-4 kg	wire rack	2		160-170*	15+10
Turkey, whole, 4,5-12 kg	wire rack	2		160-170*	12+12
Meat dishes					
Meat loaf	cookware, uncovered	2		170-180*	20+35
Casserole					
Diced meat (beef, pork, lamb)	cookware, covered	2		140	60+120
Braising steak	cookware, covered	2		140	65+120
Chicken pieces (boned)	cookware, covered	2		140	70+110
Complete meal					
With beef	wire rack + wire rack + universal pan	4+1		160, then 200 (yorkshire pudding)	weight of meat (see table above) + 15-25 for yorkshire pudding
With chicken	wire rack + wire rack + universal pan	4+1		180	weight of chicken (see table above)

* Preheat

Tips on roasting and braising

The cooking compartment becomes very dirty.	Prepare your food in an enclosed roasting dish with higher temperature or use the grill tray. You will achieve the best roasting results if you use the grill tray. The grill tray can be bought later as a special accessory.
The roast is too dark and the crackling is burned in places, and/or the roast is too dry.	Check the shelf position and temperature. Select a lower temperature the next time and reduce the roasting time if necessary.
The crackling is too thin.	Increase the temperature or switch on the grill briefly at the end of the roasting time.

The roast looks good but the juices are burnt.	Next time, use a smaller roasting dish and add more liquid if necessary.
The roast looks good but the juices are too clear and watery.	Next time, use a larger roasting dish and add less liquid if necessary.
The meat gets burned during braising.	The roasting dish and lid must fit together well and close properly. Reduce the temperature and add more liquid when braising if necessary.

Grilling

Here, you can find information on grilling poultry, meat and fish, as well as toast. You can find the ideal settings for certain dishes in the settings tables.

Grilling with circo-roasting

Circo-roasting is very well suited to the preparation of whole poultry and fish, in addition to meat, e.g. roast pork with crackling.

Poultry
For duck or goose, pierce the skin on the underside of the wings. This allows the fat to run out.

If using duck breast, score the skin. Do not turn duck breasts.

When you turn poultry, ensure that the breast side or the skin side is underneath at first.

Poultry will turn out particularly crispy and brown if you baste it towards the end of the roasting time with butter, salted water or orange juice.

Meat
Baste lean meat with fat as required or cover it with strips of bacon.

Score the rind crosswise. If you turn the joint when cooking, ensure that the rind is underneath at first.

When the joint is ready, turn off the oven and allow it to rest for another 10 minutes in the cooking compartment. This allows the meat juices to be better distributed. Wrap the joint in aluminium foil if necessary. The recommended resting time is not included in the cooking time indicated.

Fish
Fish cooked whole does not have to be turned. Place the whole fish into the cooking compartment in swimming position with the dorsal fin facing upwards. Placing half a potato or a small oven-proof container in the stomach cavity of the fish will provide stability.

You can tell when the fish is cooked because the dorsal fin can be removed easily.

Roasting on the wire rack

On the wire rack, poultry and meat will become very crispy on all sides. Roasting on the wire rack is well suited for larger poultry or for multiple pieces at the same time.

Depending on the size and type of the meat, add up to ½ litres of water to the universal pan. Any dripping fat and meat juices will be caught. You can prepare a sauce using these meat juices. In addition, less smoke is generated, and the cooking compartment stays cleaner.

Slide the universal pan into the oven at the indicated shelf position with the wire rack attached. Ensure that the wire rack is correctly positioned on the universal pan. ⟶ *"Accessories" on page 9*

Roasting in cookware

It is more convenient to roast and braise meat in cookware. You can take the joint out of the cooking compartment more easily in the cookware, and prepare the sauce in the cookware itself.

Only use cookware which is suitable for use in an oven. Check whether the cookware fits in the cooking compartment.

Glass cookware is most suitable. Place hot glass cookware onto a dry mat after cooking. If the surface is damp or cold, the glass may crack.

Add in a little liquid if the meat is lean. A covering of approx. ½ cm depth should be applied to the base of any glass cookware.

The quantity of liquid is dependent on the type of meat, the cookware material and also on whether or not a lid is used. If preparing poultry, meat or fish in an enamelled or dark metal roasting dish, it will need a little more liquid than if cooked in glass cookware.

The steam evaporates in the cookware when roasting. Carefully pour in more liquid if required.

Shiny roasting dishes made from stainless steel or aluminium reflect heat like a mirror and are therefore not particularly suitable. The meat cooks more slowly and will not brown so much. Use a higher temperature and/or a longer cooking time.

Observe the manufacturer's instructions for your roasting cookware.

Uncovered cookware
Use a deep roasting tin/dish for roasting meat. Place the tin/dish onto the wire rack. If you do not have any suitable cookware, use the universal pan.

Covered cookware
When cooking with covered cookware, the cooking compartment remains considerably cleaner. Ensure that the lid fits well and closes properly. Place the cookware onto the wire rack.

The distance between the meat and the lid must be at least 3 cm. The meat may rise.

Very hot steam may escape when opening the lid after cooking. Lift the lid at the rear, so that the hot steam can escape away from you.

If necessary, braise the meat first by searing it. Add water, wine, vinegar or a similar liquid to the braising liquid. A covering approx. 1-2 cm deep should be applied to the base of the cookware.

The steam evaporates in the cookware when roasting. Carefully pour in more liquid if required.

Meat can also become crispy in a covered roasting dish. To do so, use a roasting dish with a glass lid and set a higher temperature.

Grilling flat pieces

Flat pieces of poultry, meat and fish, such as steaks, drumsticks and burgers, can be prepared well using the "Grill" heating type. Excellent results are also achieved when grilling toast.

Grilling

Keep the appliance door closed when using the grill. Never grill with the appliance door open.

Slide the universal pan into the oven at the indicated shelf position with the wire rack attached. Dripping fat will be collected. Ensure that the wire rack is positioned correctly on the universal pan. ⟶ *"Accessories" on page 9*

Note: When grilling very fatty items, do not slide the universal pan in directly under the wire rack, but rather at level 2.

When grilling, try wherever possible to use pieces of food which are of a similar thickness and weight. This will allow them to brown evenly and remain succulent and juicy. Place the food to be grilled directly onto the wire rack.

Use tongs to turn the pieces of food you are grilling. If you pierce the meat with a fork, the juices will run out and it will become dry.

Do not add salt to the meat until after it has been grilled. Salt draws water from the meat.

Notes

- The grill element switches itself on and off continuously; this is normal. The set temperature determines how frequently this occurs.
- Smoke may be produced when grilling.

Recommended setting values

In the table, you can find the ideal heating type for your poultry, meat and fish, in addition to toast. Temperature and cooking time depend on the quantity, composition and temperature of the food. Settings ranges are indicated for this reason. Try using the lower values at first. You can use a higher setting next time if necessary.

The setting values are based on the assumption that unstuffed, chilled, ready-to-roast poultry, meat and fish are placed into a cold cooking compartment.

In the table, you can find specifications for poultry, meat and fish with default values for the weight. If you wish to prepare heavier poultry, meat or fish, use the lower temperature in every case. If roasting several joints, use the weight of the heaviest piece as a basis for determining the cooking time. The individual pieces should be approximately equal in size.

A general rule: the larger the poultry, meat or fish is, the lower the cooking temperature and the longer the cooking time.

Turn the poultry, meat and fish after approx.½ to ⅔ of the indicated time.

Remove unused accessories from the cooking compartment. This will achieve the best possible cooking results and energy savings of up to 20 per cent.

Types of heating used:
- Circo-roasting
- Grill, large area

Dish	Accessories	Shelf position	Type of heating	Temperature in °C	Cooking time in mins.
Beef					
Steaks, height 2-3 cm**	wire rack	4		290	1st side 10-12
					2nd side 3-5
Burger, height 1-2 cm	wire rack	4		290*	1st side 6-8
					2nd side 4-6
Slow roast joint	wire rack	2		180-200	30+30
Top side / Top rump	wire rack	2		150-160	30+30
Lamb					
Steaks, height 2-3 cm	wire rack	4		290*	1st side 8-10
					2nd side 4-6
Chops, height 2-3 cm	wire rack	4		290	1st side 7-9
					2nd side 7-9
Leg (bone-in)	wire rack	2		160-180	30+30

* Preheat
** Do not preheat
*** Preheat 3 minutes
**** Preheat 3 minutes, turn over several times

Dish	Accessories	Shelf position	Type of heating	Temperature in °C	Cooking time in mins.
Shoulder (bone -in)	wire rack	2		170-190	25+15
Shoulder (boned and rolled)	wire rack	2		170-190	25+20
Rack of lamb	wire rack	2		190-200	25+20
Pork					
Steaks, height 2 cm	wire rack	4		290	1st side 10-12
					2nd side 5-7
Chops, height 2-3 cm	wire rack	4		275*	1st side 10-12
					2nd side 9-10
Burger, height 1-2 cm***	wire rack	4		290*	1st side 7-9
					2nd side 5-7
Sausages, thickness 2-4cm****	wire rack	4		290*	10-15
Roast joint	wire rack	2		180-200	35+40
Loin joint	wire rack	2		180-200	30+30
Belly	wire rack	2		220-240	25+40
Gammon joint	wire rack	2		180-200	30+25
Poultry					
Chicken drumstick, 150 g each	wire rack	3		210-230	20-30
Chicken breast, boneless, 150 g each***	wire rack	4		275*	1st side 10-15
					2nd side 10-15
Chicken, whole	wire rack	2		200-220	20+15
Chicken, portion, 200-250 g each	wire rack	3		210-230	1st side 15-20
					2nd side 10-15
Chicken, quarter 450 g each	wire rack	2		210-230	1st side 20-25
					2nd side 15-20
Duck, 2-3 kg	wire rack	2		190-210	20+20
Turkey, crown	wire rack	2		190-210	20+10
Turkey, drumstick	wire rack	2		190-210	25+20
Turkey, whole, 3-4 kg	wire rack	2		160-180	15+10
Turkey, whole, 4,5-12 kg	wire rack	2		140-160	12+12
Fish					
Trout, whole, 300 g each	wire rack	2		170-190	20-30
Fillets, each 150 g***	wire rack	4		220*	1st side 5-10
					2nd side 5-10
Toast					
Grilling white bread**	wire rack	4		290	4-6

* Preheat
** Do not preheat
*** Preheat 3 minutes
**** Preheat 3 minutes, turn over several times

Convenience products

Here, you can find the ideal settings for preparing chilled and frozen food.

Only use original accessories supplied with your appliance. These have been tailored to the cooking compartment and the operating modes of your appliance.

Tips

- The cooking result greatly depends on the quality of the food. Pre-browning and unevenness may already be present on the packaged product.

- Do not use frozen products that are heavily frosted. Remove any ice on the food.
- Distribute foods which are in pieces, such as bread rolls and potato products, so that they are spread flat and evenly on the accessories. Leave a little space between the individual pieces.
- Observe the instructions on the packaging.

Shelf positions

Use the indicated shelf positions.

Baking on one level

When baking on one level, use the following shelf positions:

- Tall baked items: Level 2
- Flat baked items: Level 3

If you are using CircoTherm Hot air as the type of heating, you can choose between levels 1, 2, 3 and 4.

Baking on two levels

Use CircoTherm. Baked items that are placed into the oven on trays or in baking tins/dishes at the same time will not necessarily be ready at the same time.

- Universal pan: Level 3
  Baking tray: Level 1

Accessories

Ensure that you always use suitable accessories and that they are placed in the oven the right way around.

Wire rack

Insert the wire rack with the open side facing the appliance door and the outer rail pointing downwards .

Universal pan or baking tray

Slide the universal pan or the baking tray in carefully as far as the limit stop with the bevelled edge facing the appliance door.

Greaseproof paper

Only use greaseproof paper that is suitable for the selected temperature. Always cut greaseproof paper to size.

Recommended setting values

In the table, you can find the ideal heating type for various dishes. Temperature and cooking time depend on the quantity and composition of the product. Setting ranges are indicated for this reason. Try using the lower values at first. A lower temperature results in more even browning. You can use a higher setting next time if necessary.

Note: Cooking times cannot be reduced by using higher temperatures. The dish would only be cooked on the outside, but would not be fully cooked in the middle.

The setting values apply to dishes placed into a cold cooking compartment. By doing so, you can make energy savings of up to 20 per cent. If you preheat the oven, the indicated cooking times will be reduced by several minutes.

Preheating is necessary for selected dishes, and this is indicated in the table.

Remove unused accessories from the cooking compartment. This will achieve the best possible cooking results and energy savings of up to 20 per cent.

Types of heating used:

- CircoTherm hot air
- Top/bottom heating
- Pizza setting
- Bread baking setting

Dish	Accessories/cookware	Shelf position	Type of heating	Temperature in °C	Cooking time in mins.
Pizza, chilled					
Pizza, chilled	wire rack	3		190-210	10-15
Pizza, frozen					
Pizza, thin base	wire rack	3		190-210	15-20
Pizza, thin base, 2 levels	universal pan + wire rack	3+1		190-210	20-25
Pizza, thick base	wire rack	3		180-200	20-25
Pizza, thick base, 2 levels	universal pan + wire rack	3+1		190-210	20-30
Pizza baguette	wire rack	3		200-220	15-20
Potatoe products, frozen					
Oven chips	universal pan	3		190-210	25-35
Oven chips, 2 levels	universal pan + baking tray	3+1		190-210	30-40
Croquettes	universal pan	3		200-220	25-35
Hash browns	universal pan	3		200-220	25-35
Potatoe wedges	universal pan	3		190-210	25-35
* Turn during cooking					

Dish	Accessories/cookware	Shelf position	Type of heating	Temperature in °C	Cooking time in mins.
Baked goods, frozen, prebaked					
Rolls, baguettes	universal pan	3		180-200	10-15
White bread	universal pan	3		180-200	15-30
Fried food, frozen					
Fish fingers*	universal pan	3		200-220	20-30
Chicken nuggets	universal pan	3		190-210	20-25
Food, chilled					
Lasagna, 400 g	ovenproof dish on wire rack	2		190-210	30-35
Lasagna, 1,2 kg	ovenproof dish on wire rack	2		180-200	30-40
Food, frozen					
Lasagna, 400 g	ovenproof dish on wire rack	2		190-210	30-35
Lasagna, 1,2 kg	ovenproof dish on wire rack	2		180-200	50-70
* Turn during cooking					

Yogurt

You can make your own yogurt using your appliance.

Preparing yogurt

Remove accessories and shelves from the cooking compartment. The cooking compartment must be empty.

1. Heat 1 litre of milk (3.5 % fat) to 90 °C on the hob and then cool down to 40 °C.
   It is sufficient to heat UHT milk to 40 °C.
2. Stir in 150 g (chilled) yogurt.
3. Pour into cups or small jars and cover with cling film.
4. Place the cups or jars onto the cooking compartment floor and use the settings indicated in the table.
5. After preparation, leave the yogurt to cool in the refrigerator.

Type of heating used:
- Dough proving

Dish	Cookware	Shelf position	Type of heating	Temperature in °C	Cooking time in hours
Yoghurt	individual moulds	cooking compartment floor		35-40	8-9h

Save energy with Eco heating types

You can save energy when cooking using the energy-efficient heating types "CircoTherm Eco" and "Top/ bottom heating Eco".

Place the food into the empty cooking compartment before it has heated up. Otherwise, energy optimisation will not have any effect. Always keep the appliance door closed when cooking.

Remove unused accessories from the cooking compartment. This will allow you to achieve ideal cooking results and save energy.

Only use original accessories supplied with your appliance. These have been tailored to the cooking compartment and the operating modes of your appliance.

Accessories

Ensure that you always use suitable accessories and that they are placed in the oven the right way around.

Wire rack
Insert the wire rack with the open side facing the appliance door and the outer rail pointing downwards .

Universal pan or baking tray
Slide the universal pan or the baking tray in carefully as far as the limit stop with the bevelled edge facing the appliance door.

Baking tins and cookware
Dark- coloured metal baking tins are most suitable. These allow you to make energy savings of up to 35 per cent.

Cookware made from stainless steel or aluminium reflects heat like a mirror. Non-reflective cookware made from enamel, heat-resistant glass or coated, die-cast aluminium is more suitable.

Tinplate baking tins, ceramic dishes or glass dishes prolong baking time, and the cake will not brown so evenly.

Greaseproof paper
Only use greaseproof paper that is suitable for the selected temperature. Always cut greaseproof paper to size.

Recommended setting values

Here, you can find specifications for the various dishes with CircoTherm Eco and Top/bottom heating Eco. The temperature and baking time depend on the consistency and amount of the dough. Settings ranges are indicated for this reason. Try with the lower values first. A lower temperature results in more even browning. You can increase the temperature next time if necessary.

Note: Baking times can not be reduced by using higher temperatures. Cakes or baked items would only be cooked on the outside, but would not be fully cooked in the middle.

Types of heating used:
- CircoTherm Eco
- Top/bottom heating Eco

Dish	Accessories/cookware	Shelf position	Type of heating	Temperature in °C	Cooking time in mins.
Baking					
Victoria Sponge Cake	2x Ø20 cm tins	2		170-180	30-40
Light Fruit Cake	high Ø20 cm tin	2		150-170	70-90
Rich Fruit Cake	high Ø23 cm tin	2		140-160	120-180
Fruit crumble	flat glass dish	3		160-180	40-70
Sponge Cake (fatless), 3 eggs	springform cake tin Ø26 cm	2		160-170	25-40
Swiss Roll	swiss roll tin	3		180-190	15-25
Tart	plate Ø20 cm or pie tin	2		170-190	55-70
Quiche	quiche tin (dark coated)	3		190-210	35-45
(White) Bread	loaf tin (1x 900 g or 2x 450 g)	2		190-200	40-50
Scones	baking tray	3		190-210	15-20
Jam tarts	12-cup-tin	3		180-200	20-30
Soufflé	1,2L-soufflé dish	2		160-170	40-50
Pie	rectangular pie tin	2		190-200	40-55
Jacket Potatoes	baking tray	3		150-170	60-90
Meat					
Beef, slow roast joint	wire rack	2		130-140	40+40
Casserole					
Diced meat (beef, pork, lamb)	cookware, covered	2		140	60+120
Braising steak	cookware, covered	2		140	65+120
Fish					
Fish, braised, whole 300 g, e. g. trout	cookware, covered	2		190-210	25-35
Fish, braised, whole 1,5kg, e. g. salmon	cookware, covered	2		190-210	45-55
Fish fillet, plain, braised, 100 g	cookware, covered	2		190-210	15-25

Acrylamide in foodstuffs

Acrylamide is mainly produced in grain and potato products prepared at high temperatures, such as potato crisps, chips, sliced bread, bread rolls, bread or fine baked goods (biscuits, gingerbread, spiced biscuit).

Tips for keeping acrylamide to a minimum	
General	■ Keep cooking times as short as possible. ■ Cook food until it is golden brown, but not too dark. ■ Large, thick pieces of food contain less acrylamide.
Baking	With top/bottom heating at max. 200 °C. With hot air at max. 180 °C.
Biscuits	With top/bottom heating at max. 190 °C. With hot air at max. 170 °C. Egg or egg yolk reduces the production of acrylamide.
Oven chips	Spread out a single layer evenly on the baking tray. Cook at least 400 g at once on a baking tray so that the chips do not dry out.

Slow cook

Slow cooking is a technique for cooking food over a long period at low temperatures. For this reason, it is also called "low-temperature cooking".

Slow cooking is ideal for all prime cuts (e.g. tender portions of beef, veal, pork, lamb or poultry) which are to be cooked "à point". The meat will remain succulent and tender.

The benefit of this cooking method is that it allows lots of scope for menu planning because slow-cooked meat is easy to keep warm. You do not have to turn the meat when cooking. Keep the appliance door closed in order to maintain an even cooking climate.

Only use fresh, clean and hygienic meat without bones. Carefully remove sinews and fat from around the edge. Fat develops a strong, distinct flavour during slow cooking. You can also use seasoned or marinated meat. Do not use defrosted meat.

Meat can be carved immediately following slow cooking. No standing time is required. Due to the special cooking method, the meat looks pink, but is not raw or undercooked.

Note: Delayed-start operation with an end time is not possible for the slow cooking heating type.

Cookware

Use shallow cookware, e.g. a glass/porcelain serving dish. Place the cookware into the cooking compartment to preheat it.

Always place the uncovered cookware onto the wire rack at level 2.

You can find additional information in the tips on slow cooking attached to the settings table.

Your appliance features the heating type "Slow cook". Only start operation when the cooking compartment has fully cooled down. Allow the cooking compartment to warm up for approx. 15 minutes with the cookware inside.

Sear the meat on the hotplate at a very high heat and for a sufficiently long time on all sides, even on the ends. Place into the preheated cookware right away. Place the cookware containing the meat into the cooking compartment once again and cook slowly.

Recommended setting values

The slow cooking temperature and cooking time are dependent on the size, thickness and quality of the meat. Different settings ranges are indicated for this reason.

Type of heating used:
- Slow cooking

Dish	Cookware	Shelf position	Type of heating	Searing time in mins.	Temperature in °C	Cooking time in mins.
Poultry						
Duck breast, 400 g	Cookware, uncovered	2		6-8	90*	45-60
Chicken breast fillet, 200 g each	Cookware, uncovered	2		5-7	90*	30-60
Turkey breast, boned, 1 kg	Cookware, uncovered	2		8-10	90*	150-210
Pork						
Pork tenderloin steak, 5-6 cm thick, 1.5 kg	Cookware, uncovered	2		8-10	80*	210-240
Pork fillet, whole	Cookware, uncovered	2		6-8	80*	90-120
Pork medallions, 4 cm thick	Cookware, uncovered	2		5-7	80*	90-120
Beef						
Joint of beef (rump), 6-7 cm thick, 1.5 kg	Cookware, uncovered	2		8-10	80*	210-270
Beef tenderloin, whole, 1 kg	Cookware, uncovered	2		4-6	80*	150-210
Sirloin, 5-6 cm thick	Cookware, uncovered	2		6-8	80*	210-270
Beef medallions/rump steak, 4 cm thick	Cookware, uncovered	2		5-7	80*	30-60
Veal						
Joint of veal, 4-5 cm thick, 1.5 kg	Cookware, uncovered	2		8-10	80*	210-240
Joint of veal, 10-15 cm thick, 1.5 kg	Cookware, uncovered	2		8-10	80*	210-240
Veal fillet, whole, 800 g	Cookware, uncovered	2		5-7	80*	120-150
Veal medallions, 4 cm thick	Cookware, uncovered	2		5-7	80*	45-90

* Preheat

Dish	Cookware	Shelf position	Type of heating	Searing time in mins.	Temperature in °C	Cooking time in mins.
Lamb						
Saddles of lamb, boneless, 200 g each	Cookware, uncovered	2		5-7	80*	120-180
Leg of lamb, boned, medium, 1 kg, tied	Cookware, uncovered	2		6-8	80*	180-240
* Preheat						

Tips for slow cooking

Slow-cooking duck breast.	Place the cold duck breast into a pan and fry the skin side first. After slow cooking, grill for 3 to 5 minutes until crispy.
The slow-cooked meat is not as hot as conventionally roasted meat.	So that the roasted meat does not cool so quickly, warm the plates and serve the sauces very hot.

Drying

You can achieve outstanding drying results with CircoTherm. With this type of preserving, flavourings are concentrated by the dehydration.

Only use unblemished fruit, vegetables and herbs and wash them thoroughly. Line the wire rack with greaseproof paper or parchment paper. Drain the excess water from the fruit and dry it.

If necessary, cut it into equal chunks or thin slices. Place unpeeled fruit onto the dish with the sliced surfaces facing upwards. Ensure that neither fruit nor mushrooms overlap on the wire rack.

Grate vegetables and then blanch them. Allow the blanched vegetables to drain off and distribute them evenly on the wire rack.

Dry herbs on the stem. Position the herbs evenly and slightly heaped on the wire rack.

Use the following shelf positions for drying:
- 1 wire rack: Level 3
- 2 wire racks: Level 3+1

Turn very juicy fruit and vegetables several times. After drying, remove the dried products from the paper immediately.

Recommended setting values

In the table, you can find settings for drying various foodstuffs. The temperature and cooking time are dependent on the type, moisture, ripeness and thickness of the food to be dried. The longer you leave the food to be dried, the better it will be preserved. The thinner the slices are, the quicker the drying process will be and the more aromatic the dried food will remain. Setting ranges are indicated for this reason.

If you wish to dry additional foodstuffs, you should use similar foodstuffs in the table as a reference.

Type of heating used:
- CircoTherm hot air

Fruit, vegetables and herbs	Accessories	Type of heating	Temperature in °C	Cooking time in hours
Pomes (apple rings, 3 mm thick, 200 g per wire rack)	1-2 wire racks		80	5-9
Stone fruit (plums)	1-2 wire racks		80	8-10
Root vegetables (carrots), grated, blanched	1-2 wire racks		80	5-8
Sliced mushrooms	1-2 wire racks		60	6-9
Herbs, washed	1-2 wire racks		60	2-6

Preserving

You can preserve fruit and vegetables using your appliance.

⚠ Warning
Risk of injury!
If the food is preserved incorrectly, the preserving jars may burst. Follow the instructions for preserving.

Jars

Use only clean and undamaged preserving jars. Only use heat-resistant, clean and undamaged rubber rings. Check clips and clamps in advance.

For each preserving process, only use preserving jars that are the same size and contain the same food. In the cooking compartment, you can preserve the contents of a maximum of six ½, 1 or 1½-litre preserving jars at the same time. Do not use jars that are larger or taller than this. The lids could rupture.

Preserving jars must not touch one another in the cooking compartment during the preserving process.

Preparing fruit and vegetables

Only use fruit and vegetables that are in good condition. Wash them thoroughly.

Peel, core and chop fruit and vegetables appropriate to their type and fill the preserving jars with them up to approx. 2 cm below the rim.

Fruit
Fill the preserving jars with the fruit along with a hot, skimmed sugar solution (approx. 400 ml for a 1-litre jar). For one litre of water:
- Approx. 250 g sugar for sweet fruit
- Approx. 500 g sugar for sour fruit

Vegetables
Fill the jars with the vegetables along with hot, boiled water.

Wipe the rims of the jars, as they must be clean. Place a damp rubber ring and a lid on each jar. Seal the jars with clamps. Place the jars into the universal pan so that they do not touch each other. Pour 500 ml hot water (approx. 80 °C) into the universal pan. Use the settings indicated in the table.

Ending the preserving process

Fruit
After a short while, small bubbles will form at short intervals. Switch off the appliance once all preserving jars are bubbling. Remove the jars from the cooking compartment after the indicated cooling time.

Vegetables
After a short while, small bubbles will form at short intervals. As soon as all preserving jars are bubbling, reduce the temperature to 120 °C and allow the jars to continue to bubble in the closed cooking compartment as indicated in the table. After this time has elapsed, switch off the appliance and make use of the residual heat for several minutes as indicated in the table.

After preserving, remove the jars from the cooking compartment and place them onto a clean cloth. Do not place these hot jars onto a cold or damp surface, as they may crack. Cover the preserving jars to protect them from draughts. Only remove the clamps once the jars are cold.

Recommended setting values

The indicated times in the settings table are average values for preserving fruit and vegetables. They may be influenced by room temperature, the number of jars, quantity, heat and quality of the jar contents. The specifications are based on 1-litre round jars. Before you switch off the appliance or change the cooking mode, check whether the contents of the jars are bubbling as they should. The bubbling process starts after approx. 30-60 minutes.

Type of heating used:
- CircoTherm hot air

Preserving	Cookware	Shelf position	Type of heating	Temperature in °C	Cooking time in mins.
Vegetables, e.g. carrots	1-litre preserving jars	1		160-170	Before it starts bubbling:30-40
				120	When it starts to bubble: 30-40
				-	Residual heat: 30
Vegetables, e.g. cucumbers	1-litre preserving jars	1		160-170	Before it starts bubbling: 30-40
				-	Residual heat: 30
Stone fruit, e.g. cherries, damsons	1-litre preserving jars	1		160-170	Before it starts bubbling:30-40
				-	Residual heat:35
Pomes, e.g. apples, strawberries	1-litre preserving jars	1		160-170	Before it starts bubbling:30-40
				-	Residual heat: 25

Allowing the dough to prove at dough proving setting

Yeast dough will prove considerably more quickly using the "Dough proving" heating type than at room temperature and does not dry out. Only start operation when the cooking compartment has fully cooled down.

Always allow yeast dough to prove twice. Observe the specifications in the settings tables for the 1st and 2nd proving processes (dough fermentation and final fermentation).

Dough fermentation
Pour 200 ml water onto the cooking compartment floor for the dough fermentation.

Caution!
Surface damage
- Never pour water into the hot cooking compartment. The temperature change can cause damage to the enamel.
- Do not use distilled water. Use tap water only.

Place the dough into a heat-resistant bowl and place it onto the wire rack. Use the settings indicated in the table.

Do not open the appliance door during the proving process, as moisture will escape. Do not cover the dough.

Condensation builds during operation which steams up the door pane. Wipe out the cooking compartment after dough proving. Loosen any limescale with a little vinegar and wipe with clean water.

Final fermentation
Place your baked item into the oven at the shelf position indicated in the table.

If you want to preheat the oven, the final fermentation takes place outside the appliance in a warm place.

Recommended setting values

The temperature and proving time are dependent on the type and quantity of the ingredients. The values in the table are therefore only meant to be average values.

Type of heating used:
- Dough proving

Dish	Accessories/cookware	Shelf position	Type of heating	Step	Temperature in °C	Cooking time in mins.
Yeast dough, light	Bowl	2		Dough fermentation	35-40	25-30
	Baking tray	2		Final fermentation	35-40	10-20
Yeast dough, heavy and rich	Bowl	2		Dough fermentation	35-40	20-40
	Baking tray	2		Final fermentation	35-40	15-25

Defrosting

Use heating type "CircoTherm" to defrost frozen fruit, vegetables and baked items. Poultry, meat and fish should ideally be defrosted in the refrigerator.

Use the following shelf positions when defrosting:
- 1 wire rack: Level 2
- 2 wire racks: Level 3+1

Recommended setting values

The times in the table are average values. They are dependent on the quality, freezing temperature (-18 °C) and composition of the food. Time ranges are indicated. Set the shortest time first and then extend the time if necessary.

Tip: Items which were frozen flat or portioned defrost faster than those frozen in a block.

Remove frozen food from the packaging and place it in suitable cookware onto the wire rack.

Stir the food or turn it once or twice in between. Large pieces of food should be turned several times. Occasionally split the food or remove items which have already defrosted from the cooking compartment.

Leave the defrosted food to rest for another 10 to 30 minutes in the appliance whilst it is switched off, so that the temperature balances out.

Type of heating used:
- CircoTherm hot air

Dish	Accessories	Shelf position	Type of heating	Temperature in °C	Cooking time in mins.
Bread, bread rolls					
Bread & bread rolls general	Baking tray	2		50	40-70
Cake					
Cake, moist	Baking tray	2		50	70-90
Cake, dry	Baking tray	2		60	60-75

Keeping warm

You can keep cooked dishes warm using the top/bottom heating type at 70 °C. This will avoid condensation developing, and means you will not have to wipe out the cooking compartment.

Do not keep cooked dishes warm for longer than two hours. Be aware that some dishes may continue cooking whilst being kept warm. Cover the dishes if necessary.

Test dishes

These tables have been produced for test institutes to facilitate the inspection of the appliance.

In accordance with EN 60350-1:2013 and IEC 60350-1:2011.

Baking

Baked items that are placed into the oven on trays or in baking tins/dishes at the same time will not necessarily be ready at the same time.

Shelf positions for baking on two levels:
- Universal pan: Level 3
  Baking tray: Level 1
- Baking tins/dishes on the wire rack
  First wire rack: Level 3
  Second wire rack: Level 1

Shelf positions for baking on three levels:
- Baking tray: Level 4
- Universal pan: Level 3
- Baking tray: Level 1

Double-crusted apple pie
Double- crusted apple pie on one level: place dark-coloured springform cake tins diagonally next to each other.

Double-crusted apple pie on two levels: position dark-coloured springform cake tins above each other so that they are offset.

Cakes in tinplate springform cake tins: bake on one level with top/bottom heating. Place the springform cake tin onto the universal pan instead of onto the wire rack.

Hot water sponge cake
Hot water sponge cake on two levels: vertically stack springform cake tins in an offset manner on the wire racks.

Notes
- The setting values apply to dishes placed into a cold cooking compartment.
- Please note the information in the tables about preheating. The setting values are valid without rapid heating-up.
- For baking, use the lower of the indicated temperatures first.

Types of heating used:
- CircoTherm hot air
- Top/bottom heating
- Pizza setting

Dish	Accessories	Shelf position	Type of heating	Temperature in °C	Cooking time in mins.
Baking					
Whirls***	Baking tray	3	Top/bottom heating	140-150*	25-40
Whirls***	Baking tray	3	CircoTherm hot air	140-150*	25-40
Whirls, 2 levels***	Universal pan + baking tray	3+1	CircoTherm hot air	140-150*	30-40
Whirls, 3 levels***	Baking trays + universal pan	4+3+1	CircoTherm hot air	130-140*	35-55
Small cakes***	Baking tray	3	Top/bottom heating	160*	20-30
Small cakes***	Baking tray	3	CircoTherm hot air	150*	25-35
Small cakes, 2 levels***	Universal pan + baking tray	3+1	CircoTherm hot air	150*	25-35
Small cakes, 3 levels***	Baking trays + universal pan	4+3+1	CircoTherm hot air	140*	35-45
Hot water sponge cake**	Springform cake tin, diameter 26 cm	2	Top/bottom heating	160-170*	25-35
Hot water sponge cake**	Springform cake tin, diameter 26 cm	2	CircoTherm hot air	160-170*	25-35
Hot water sponge cake, 2 levels**	Springform cake tin, diameter 26 cm	3+1	CircoTherm hot air	150-170*	30-50
Double-crusted apple pie	2 x black plate tins, diameter 20 cm	2	Pizza setting	170-180	60-80
Double-crusted apple pie	2 x black plate tins, diameter 20 cm	2	Top/bottom heating	180-200	60-80
Double-crusted apple pie, 2 levels	2 x black plate tins, diameter 20 cm	3+1	CircoTherm hot air	170-190	70-90

* Preheat
** Preheat, do not use quick heat function
*** Preheat for 5 mins., do not use quick heat function

Grilling

Also slide in the universal pan. The liquid will be caught and the cooking compartment stays cleaner.

Type of heating used:
- ■ 〰 Grill, large area

Dish	Accessories	Shelf position	Type of heating	Temperature in °C	Cooking time in mins.
Grilling					
Toasting bread*	Wire rack	4	〰	290	4-6
Beefburgers, x 12**	Wire rack	4	〰	290	25-30
* Do not preheat ** Turn after 2/3 of the total time					



Constructa Neff
Vertriebs-GmbH
Carl-Wery-Straße 34
D-81739 München

Register your product online

www.neff-international.com

9001082126 950428