NORTHERN LIGHTS

HUXLEY

WALL

PRODUCT CODE: HUXLEY WALL NA546

Influenced by wooden furniture and metal inlay designs from the 1960s, the Huxley range combines shaped routed rectangular wooden pieces, finished in Rose Teak with brass accents. The brass details are intricately assembled after a soft antique patina is applied. A rectangular antique brass backplate completes the fitting, resulting in an impressively solid and serious piece.

Completed with an Ivory Satin Oval shade with Gold PVC Lining.

Bespoke finish and shade options are available.

Please contact us for details.

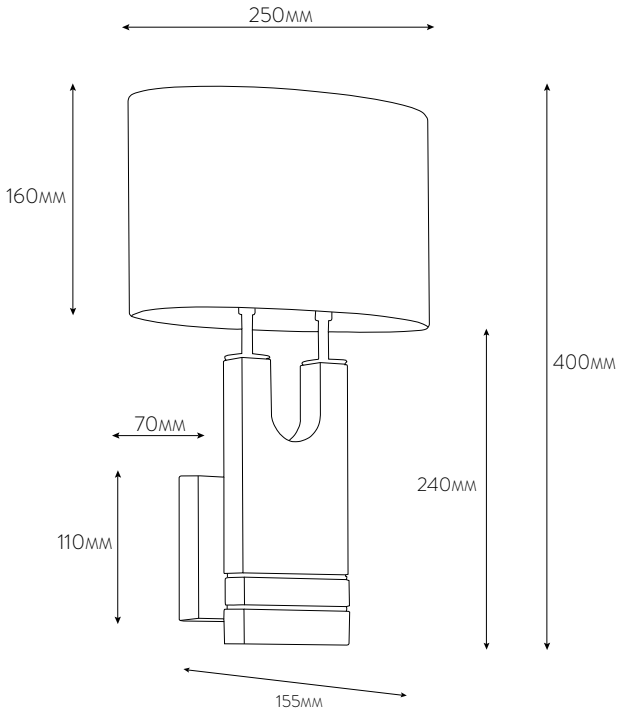

MAX WATTAGE : 1 X 40W
LAMP HOLDER TYPE : E27
RECOMMENDED LAMP : LED