ON A3 SIZED ORIGINAL (MM) | 0 | 10 | 20 | 30 | 40 | 50

0.5 | 1 | 1.5 | 2 | 2.5 | ON A3 SIZED ORIGINAL (INCHES)

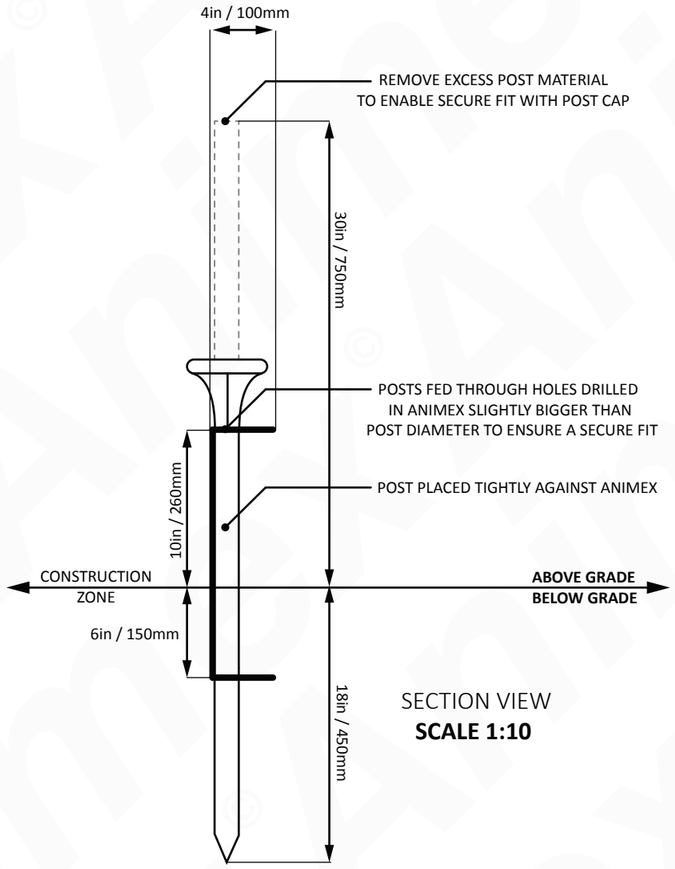

SECTION VIEW
SCALE 1:10

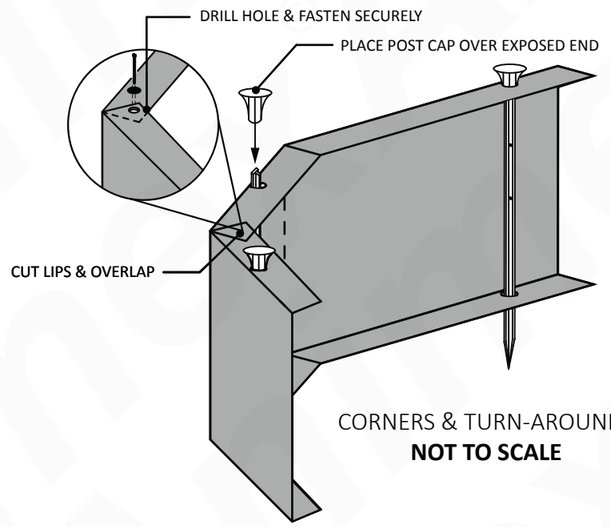

CORNERS & TURN-AROUNDS
NOT TO SCALE

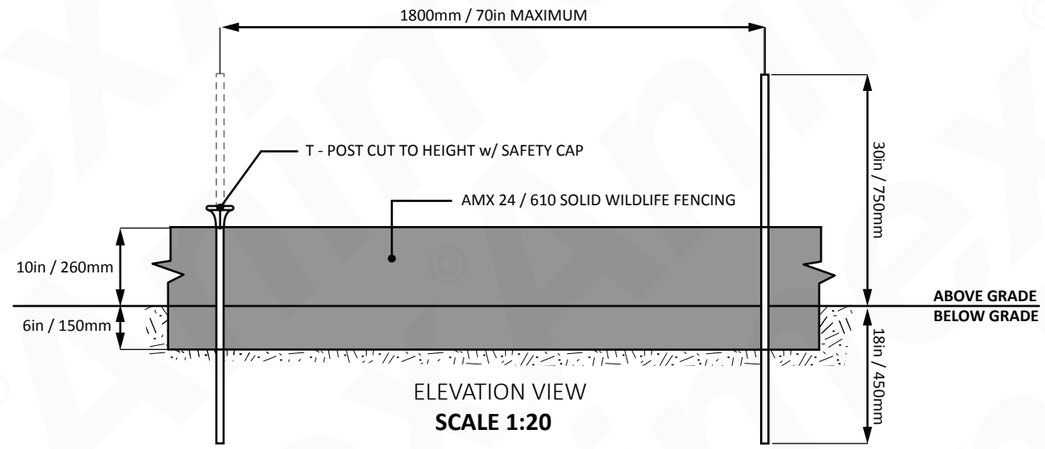

ELEVATION VIEW
SCALE 1:20

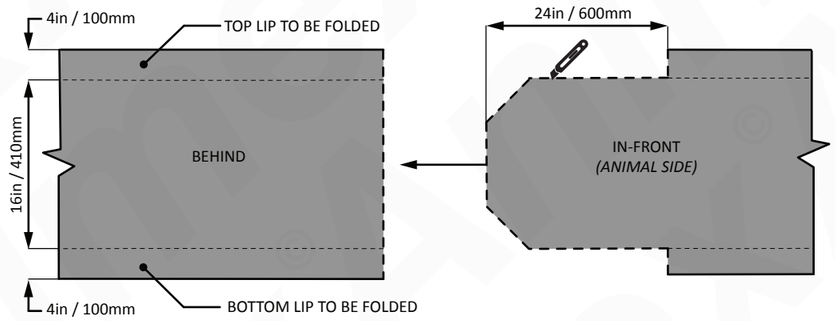

CUTTING AND JOINING
ELEVATION VIEW
NOT TO SCALE

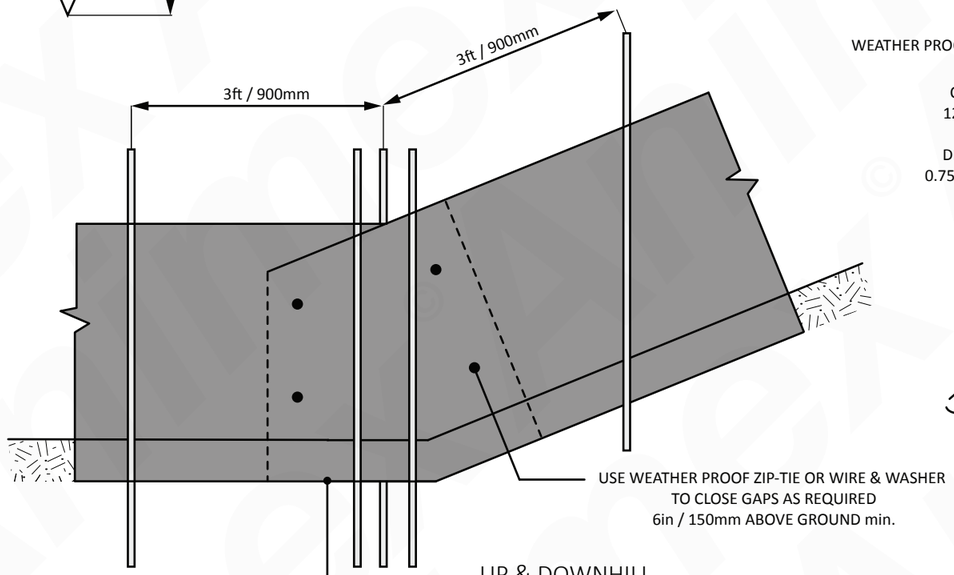

UP & DOWNHILL
NOT TO SCALE

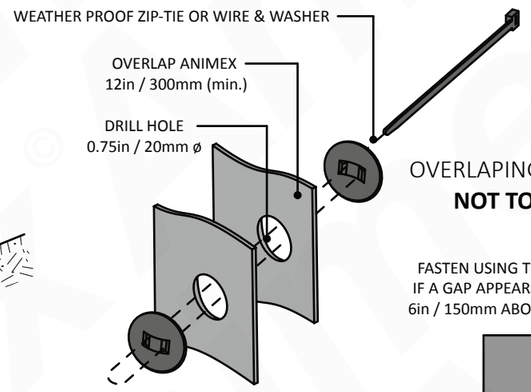

OVERLAPING SECTIONS
NOT TO SCALE

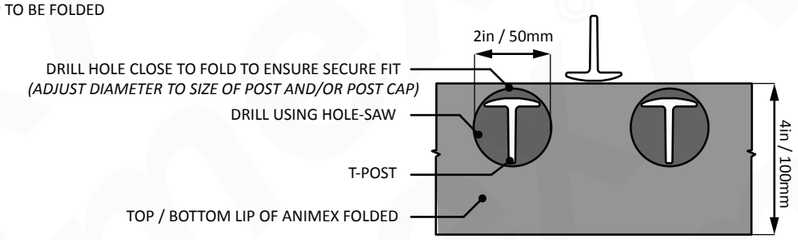

BIRDS EYE VIEW
POST INSTALLATION & JOINING
NOT TO SCALE

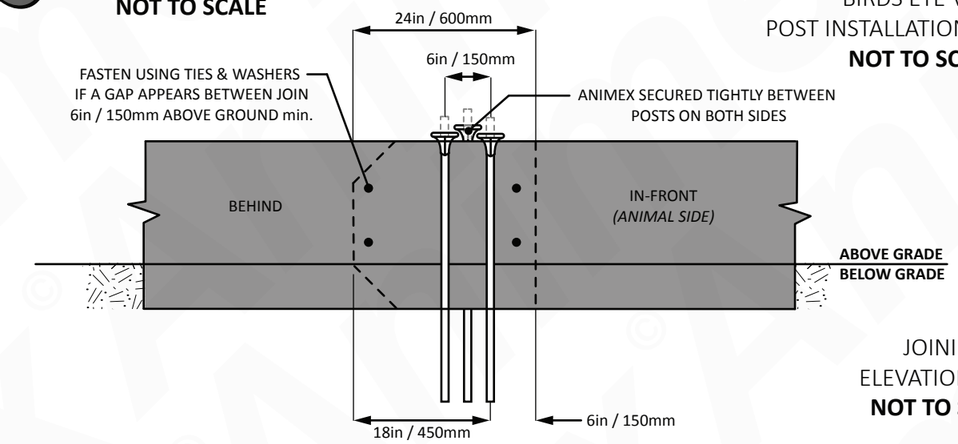

JOINING
ELEVATION VIEW
NOT TO SCALE

Animex®
Wildlife Fencing Solutions

FREE STANDING WILDLIFE FENCING : **PERMANENT**

- AMX 24 / 610 - BELOW GROUND INSTALLATION -

NOTES:
This specification should be used to aid installation. Measurements are accurate but may need to be adjusted dependent on location, conditions and local authority recommendations.

DRAWING NO.
1 OF 1

COPYRIGHT ANIMEX INTERNATIONAL 2018 ©
info@animexfencing.com