ON A3 SIZED ORIGINAL (MM) | 0 | 10 | 20 | 30 | 40 | 50

0.5 | 1 | 1.5 | 2 | 2.5 | ON A3 SIZED ORIGINAL (INCHES)

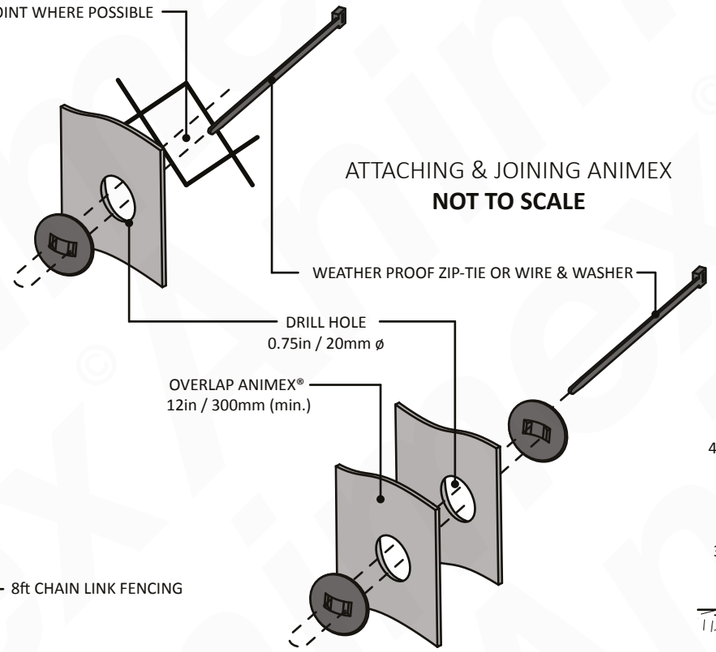

ATTACHING & JOINING ANIMEX
NOT TO SCALE

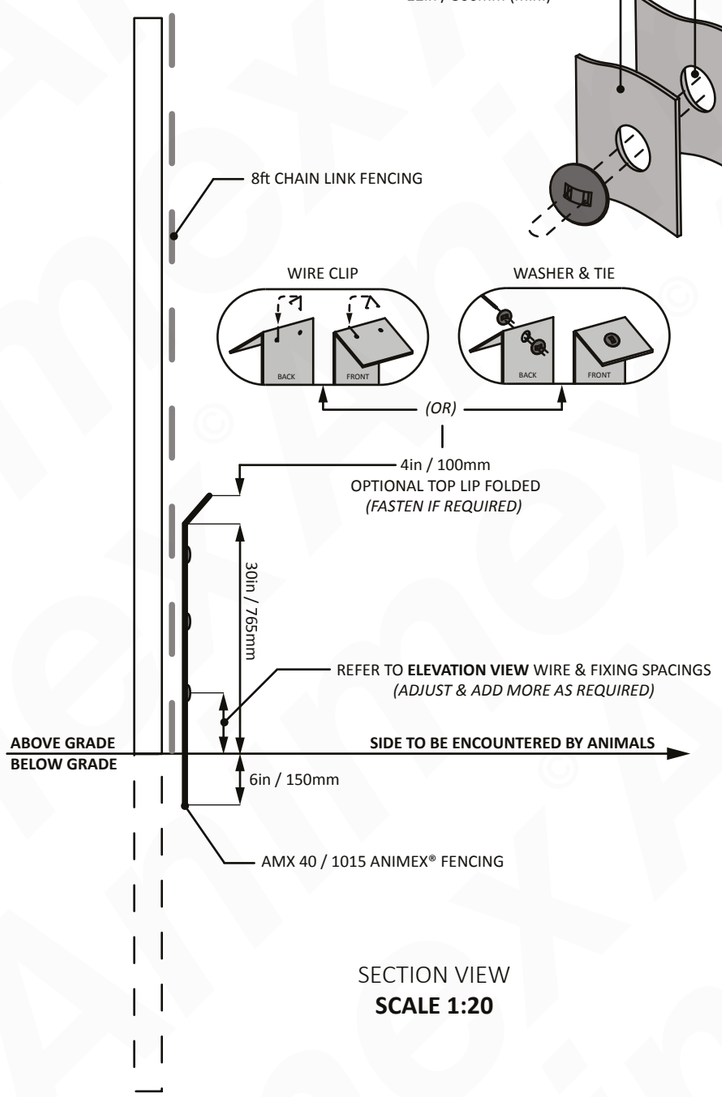

SECTION VIEW
SCALE 1:20

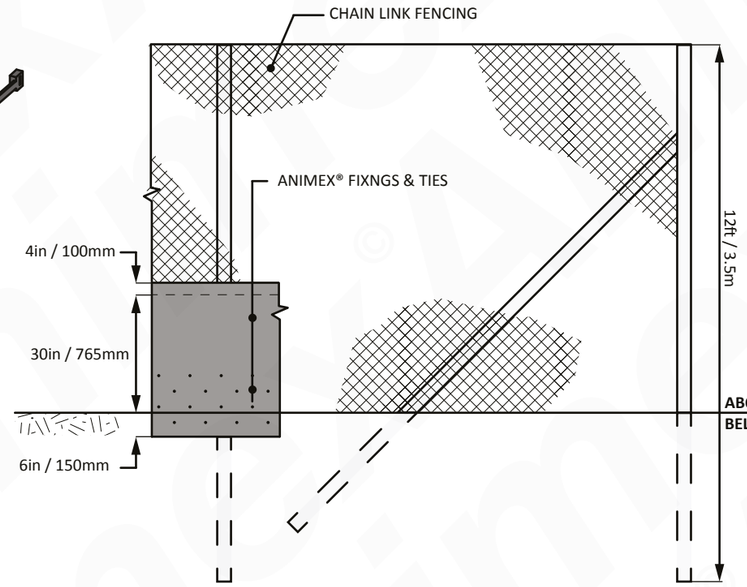

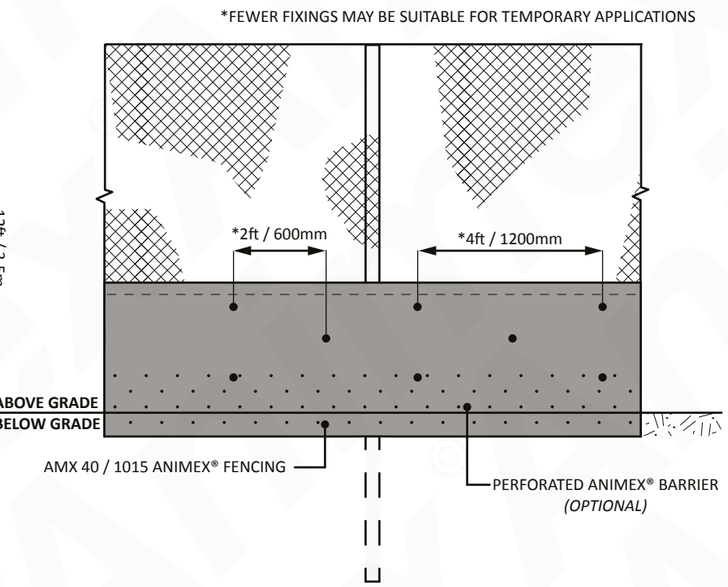

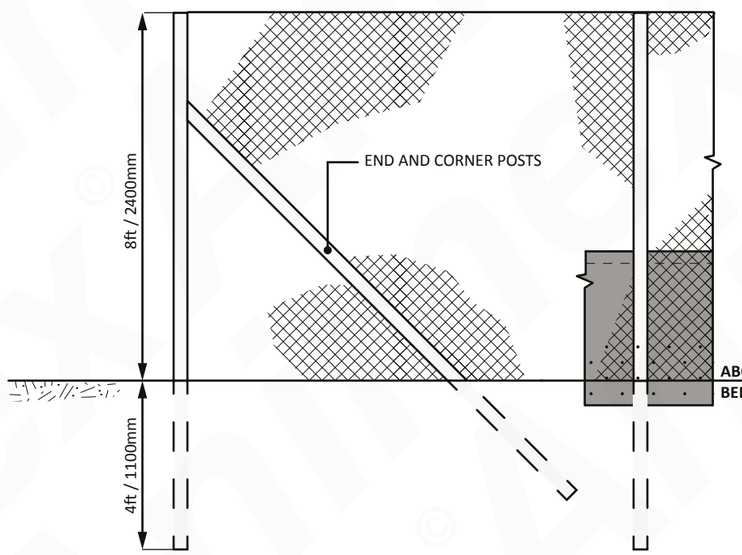

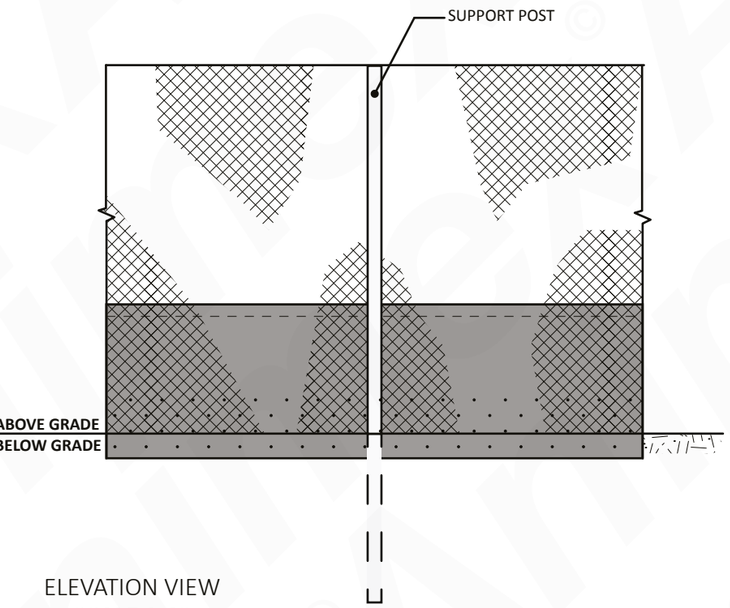

ELEVATION VIEW
SCALE 1:40

Animex®
Wildlife Fencing Solutions

ATTACHED TO CHAIN LINK FENCING

- **AMX 40 / 1015** - BELOW GROUND INSTALLATION -

NOTES:
This specification should be used to aid installation. Measurements are accurate but may need to be adjusted dependent on location, conditions and local authority recommendations.

PRODUCT NO.
AMX 40
AMX 1015

COPYRIGHT ANIMEX INTERNATIONAL 2018 ©
info@animexfencing.com