MASTER®
CLIMATE SOLUTIONS

DSH00089

INDIRECT OIL HEATER

BV 77
DUAL VOLTAGE

HEATER FUNCTIONING DIAGRAM

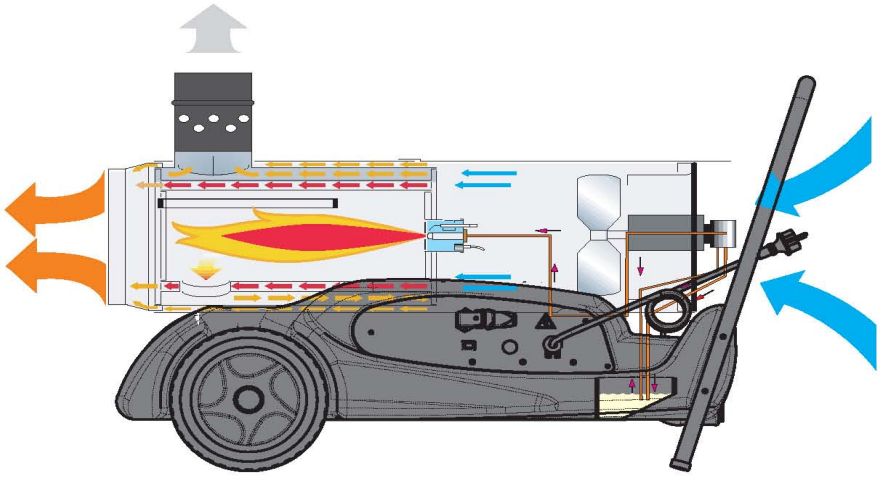

The indirect air heaters thanks a heat exchanger that enables to separate exhaust combustion gases from the heat released in the environment, so that it is possible to inject a flow of clean hot air in the area that needs to be heated and to discharge exhaust
fumes externally. The hot air generators is designed in compliance with current safety, performance and life standards, is fitted with safety devices confi gured to guarantee continuous operation, minimize noise and are manufactured in carefully selected materials that
ensure maximum reliability.

SPECIFICATION

Max Capacity	kW Kcal/h Btu/h	**20** **17200** **68300**	Oil consumption	kg/h	**1,67**
			Tank capacity	l	**36**
Combustible	Oil / Kerosene		Autonomy	h	**18**
Net weight	Kg	**32**	Tension	V	**220-240** **110-120**
Gross weight	Kg	**36**	Frequency	Hz	**50**
Ø Fan	mm	**250**	Rated current	A	**1,5 / 3,0**
Ø Chimney flue	mm	**120**	Noise level	dBa	**73**
Performance	%	**84**	Pump pressure	bar	**12**
Airflow	m³/h	**1550**			

PACKING

Packaging dimensions	mm	**1200 x 400 x 530**
Effective dimensions	mm	**1130 x 380 x 660**
Pieces for pallet	n°	**8**
Pieces full truck	n°	**264**

COMPONENTS

Pump	**Danfoss BFP - rotary with element filter**
Nozzle	**Danfoss 0,40 GPH 80° S**
Flame control	**Electronic board with transformer on board**
Igniter	**Bifilar electrodes**
Oil filter	**In line da 250 µm**
Overheat thermostat	**Series / N.C. until at 90°C**
Motor	**Asynchronous, monophase, with thermal protection, Anticlockwise rotation, 2800 g/1'**
Tank	**Material PE**
Ambient thermostat	**Predisposition for connecting an ambient thermostat**

ACCESSORIES

Ambient thermostat	**Thermostat TH5**
Hose flexible	**Ø 305 - Lengh 7,6 m - first 2 meters are made high resistant material**
Adaptor ring kit	**Kit for hose flexible Ø 294 mm**

SCHEMA ELETTRICO

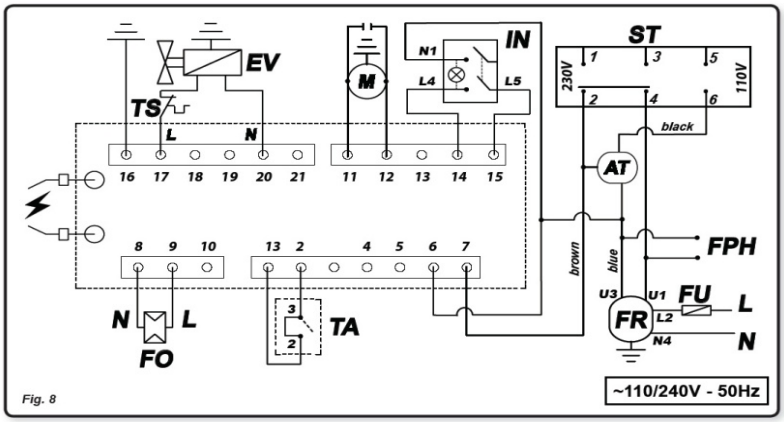

FO:	**Photoresistance**
TA:	**Ambient thermosta**
FR:	**Noise filter**
FPH:	**Pre-heated filter**
AT:	**Autotransformer**
IN:	**Switch**
EV:	**Electric valve**
TS:	**Overheat thermostat**
ST:	**Switch dual voltage**
FU:	**Fuse**
M:	**Motor**
N:	**Neutral**
L:	**Line**

SCHEMA IMPIANTO COMBUSTIBILE

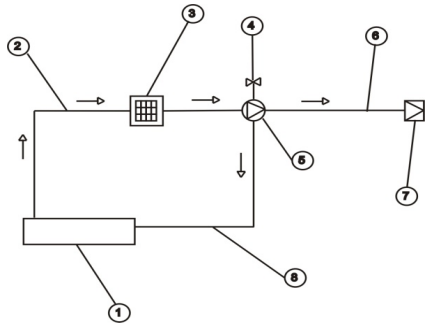

1	:	**Tank**
2	:	**Aspiration pipe**
3	:	**Oil filter**
4	:	**Electric valve**
5	:	**Pump**
6	:	**Suction pipe**
7	:	**Nozzle**
8	:	**Discharge pipe**