future automation

PLF-S-DRL

LIFT SYSTEM HEAVY SWIVEL DROP AND ROLL

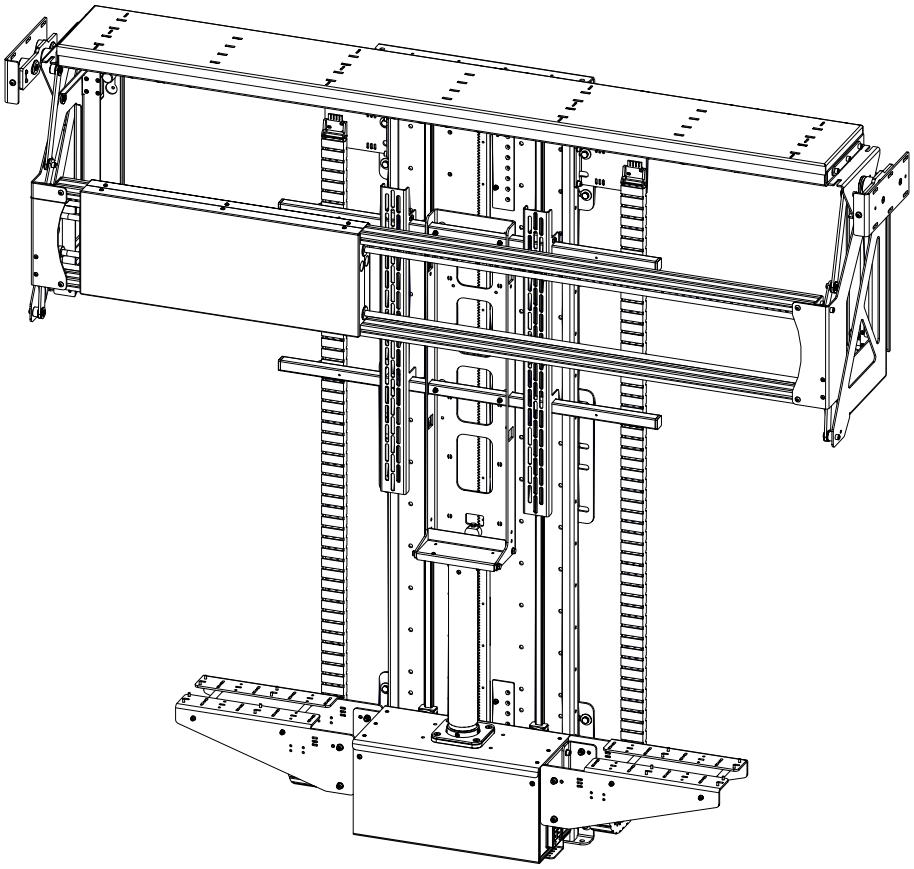

INSTALLATION
INSTRUCTIONS

ISSUE **002**

SAFETY
DISCLAIMER

IMPORTANT SAFETY INSTRUCTIONS BELOW

WARNING: Failure to provide adequate structural strengthening, prior to installation can result in serious personal injury or damage to the equipment. It is the installer's responsibility to ensure the structure to which the component is affixed can support at least four times the combined weight of the component and any additional apparatus mounted to the component.

WARNING: Do not exceed the weight capacity for this product as listed below. This can result in serious personal injury or damage to the equipment. It is the installer's responsibility to ensure that the total combined weight of all attached components does not exceed that of the maximum figure stated.

WARNING: Risk of death or serious injury may occur when children climb on audio and/or video equipment or furniture. A remote control or toys placed on the furnishing may encourage a child to climb on the furnishing and as a result the furnishing may tip over on to the child.

WARNING: Risk of death or serious injury may occur. Relocating audio and/or video equipment to furniture not specifically designed to support audio and/or video equipment may result in death or serious injury due to the furnishing collapsing or overturning onto a child or adult.

WARNING – RISK OF INJURY!

Only for use with equipment weighing **100KG (220LBS) OR LESS**.

Use with heavier equipment may lead to instability causing tip over or failure resulting in death or serious injury.

Bracket Suitable for Residential and Commercial Use.

ADDITIONAL WARNINGS:

1. Keep all documentation/instructions after fitting.
2. Read all technical instructions fully before installation and use. It is the installer's responsibility to ensure that all documentation is passed on to the end user and read fully before operation.
3. Do not use near water or outdoors unless the product has been specifically designed to do so.
4. Protect any cables or cords being used near this bracket from being walked on or pinched to prevent damage and risk of injury.
5. Use this product only for its intended purpose as described in the product instructions and only use attachments/ accessories specified by the manufacturer.
6. Do not operate the product if it is damaged in any way, liquid has been spilled or objects have fallen into the apparatus, the apparatus has been exposed to rain or moisture, does not operate normally, or has been dropped. Contact the original installer/manufacturer to arrange repair or return.

WARNING - To reduce the risk of burns, fire, electric shock, or injury to persons:

1. Clean only with a dry cloth and always unplug any electrical items being used in conjunction with this product before cleaning.

Future Sound & Vision trading as Future Automation intend to make this and all documentation as accurate as possible. However, Future Automation makes no claim that the information contained herein covers all details, conditions or variations, nor does it provide for every possible contingency in connection with the installation or use of this product. The information contained in this document is subject to change without prior notice or obligation of any kind. Future Automation makes no representation of warranty, expressed or implied, regarding the information contained herein. Future Automation assumes no responsibility for accuracy, completeness or sufficiency of the information contained in this document.

PRODUCT WARRANTY
& RISK ASSESSMENT

WARRANTY INFORMATION

WARNING - The warranty offered for this product shall be annulled if the product is used improperly or in a way that is in breach of our Terms of Service.

Future Automation provides warranty for the mechanism you purchased for the period of **24 months** from the date of purchase, provided that it isn't used for unintended purposes.

Under the warranty, Future Automation aims to either solve the issue remotely (via telephone or email support) or if the mechanism requires a part, arrange a visit to your premises by a Future Automation approved engineer or send replacement items where appropriate.

Warranty repairs will be carried out as quickly as possible, but subject to parts availability. This warranty period is respectively extended for the period of a repair.

A malfunctioning product must be cleaned and placed into suitable packaging to protect against transit damage before organising delivery to a repair workshop.

All the complaints about defects must be submitted to the vendor/installer that sold this product, rather than directly to the manufacturer.

Any part of your system that needs to be replaced during a warranty repair becomes the property of Future Automation.

The warranty does not cover the following:

- Damages resulting from improper product use or maintenance.
- Repairs carried out by unauthorized persons.
- Natural wear and tear during operation.
- Damages caused by the buyer.
- Accidental damages caused by a customer or damages caused as a result of careless attitude or usage, or damages caused by natural disasters (natural phenomena).
- Any electrical, or other environmental work external to your Future Automation mechanism including power cuts, surges etc.
- Additional items not supplied by Future Automation although they may have been supplied together by the retailer
- Any 3rd party software products controlling your mechanism
- Any transfer of ownership. Warranty is provided only to the initial purchaser.
- Compensation for loss of use of the product, and consequential loss of any kind.

A separate Safety and Servicing Information document is provided with these instructions (additional copies can be found at www.futureautomation.co.uk/safety), and this document **MUST** be filled out by the approved Future Automation Dealer who is installing the product. This Warranty Sheet must be held by the end user for the duration of the products life and will be referred to during servicing or warranty queries.

The Safety and Servicing Information document also contains two Service History Forms that must be filled in by the approved Future Automation dealer who is performing the first required yearly service of this product.

One copy of the Service History Form must be held by the customer (along with the Warranty Sheet) and a duplicate copy must be held by the approved Future Automation dealer that performed the service. Missing and/or mismatching documents may delay or invalidate warranty claims.

Additional Service History Forms can be found on the Future Automation website for further yearly services.

RISK ASSESSMENT INFORMATION

It is the installer's responsibility to perform a risk assessment of installed products. Future Automation can provide guidelines to installers/dealer about what should be included in a risk assessment, but due to the individual nuances of each location/site, Future Automation cannot provide a full list of areas to risk assess.

For full risk assessment and safety information please view our Safety and Servicing guide available at www.futureautomation.net/safety

GUIDE
CONTENTS

SAFETY DISCLAIMER 1

PRODUCT WARRANTY & RISK ASSESSMENT 2

GUIDE CONTENTS 3

PACKAGE CONTENTS 4

INITIAL TESTING 5

PLF-S FITTING 6

DRL FLAP FIXINGS 9

DRL FLAP FITTING 13

DRL FLAP ADJUSTMENTS 14

BASE PANEL ADJUSTMENTS 15

FITTING THE SCREEN 16

LEVELLING THE SCREEN 17

CABLE MANAGEMENT 18

GENERAL CONTROL 20

INFRARED (IR) 21

RADIO FREQUENCY (RF) 22

CONTACT CLOSURE 23

RS232 CONTROL 24

INTEGRATION CONSIDERATIONS 25

PACKAGE
CONTENTS

1 - PLF MECHANISM
- 1.1 - SCREEN MOUNT UPRIGHTS (X2)
- 1.2 - LIFTING BEAM
- 1.3 - BASE PANEL SUPPORT (X2)
- 1.4 - TOP CAP MOUNT

2 - DLR MECHANISM
- 2.1 - FLAP CATCH
- 2.2 - DROP AND ROLL FLAP (DRL FLAP)

4 - CONTROL BOX
- 2.1 - CONTROL BOX
- 2.2 - IR LEAD
- 2.3 - 3M LONG CABLE LOOM
- 2.4 - POWER SUPPLY UNIT
- 2.5 - CABLE CONNECTORS

4 - INFRARED (IR) REMOTE CONTROL

ITEMS NOT SHOWN ON PAGE

PLF ACCESSORY PACK:
- X2 AAA BATTERIES
- MAINS POWER LEAD
- INFRA-REF CONTROL LEAD
- CAT5 LEAD WITH RJ45 CONNECTOR
- MULTI-PACK OF NUTS, BOLTS AND WASHERS
- STOP KEY

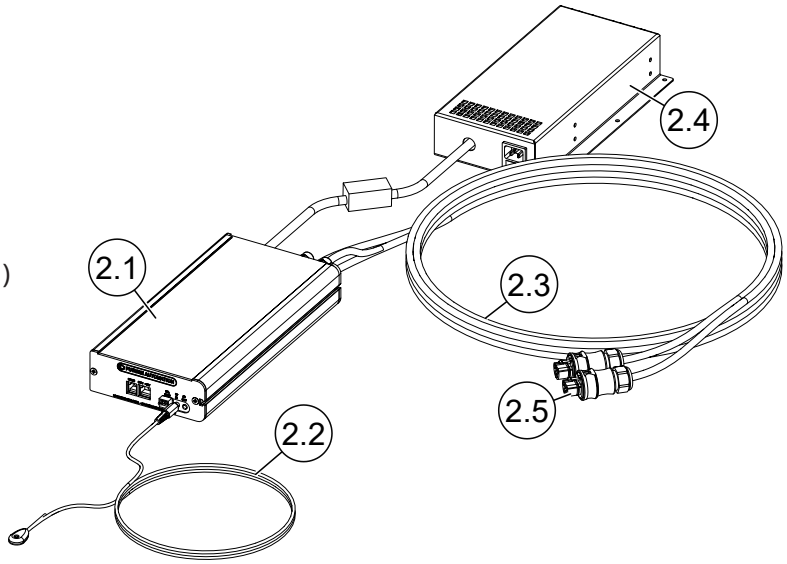

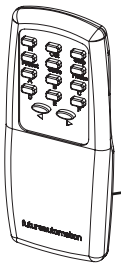

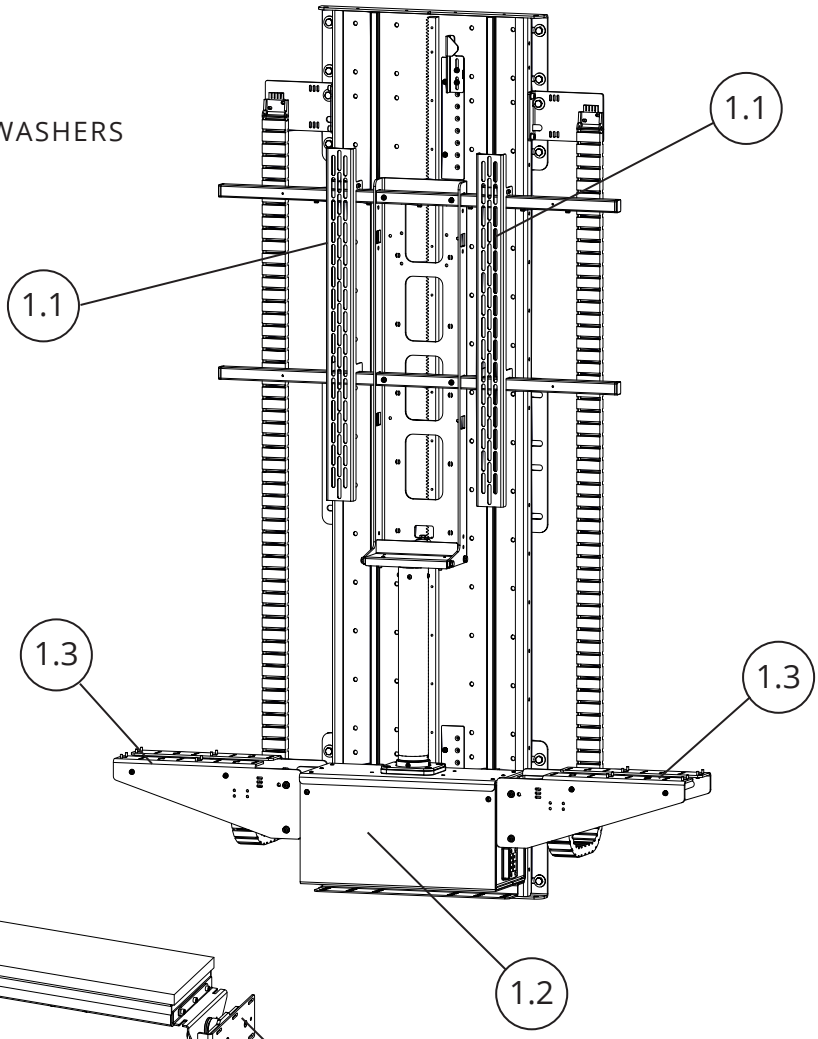

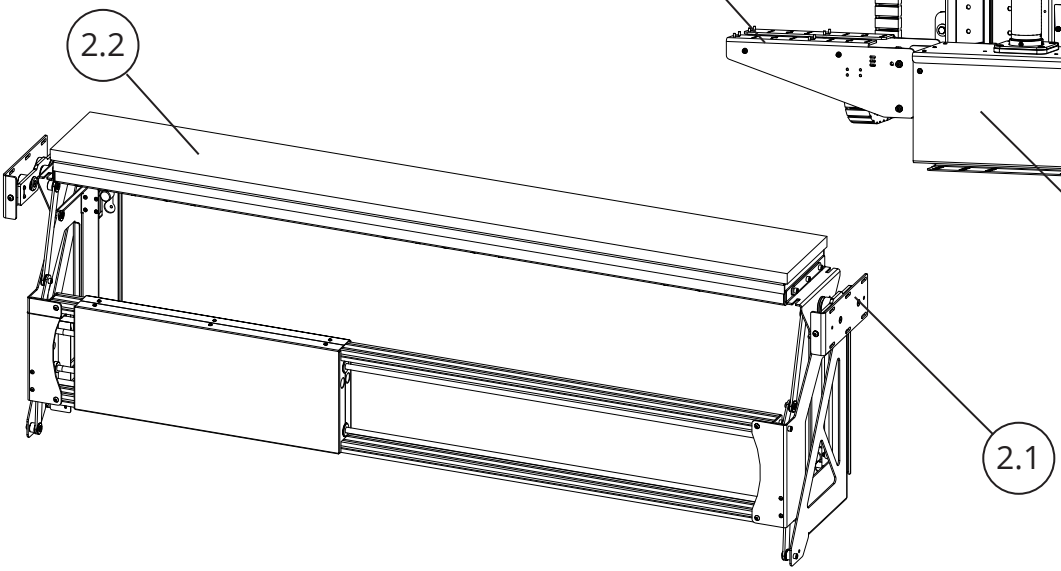

INITIAL TESTING

Before installing the PLF-S mechanism:

- Remove all red cable ties.
- Check there is no damage to any part of the PLF-S mechanism, control board, or wiring.
- Check all internal and external mechanism wiring is secure.

WARNING: THE PLF-S MECHANISM **DOES NOT** HAVE AN ANTI-JAM CAPABILITY WHEN OPENING. THE MOTOR DRIVE SYSTEM WILL Continue MOVING UNTIL IT REACHES A LIMIT SWITCH. KEEP HANDS AND ANY OBJECTS CLEAR OF THE MECHANISM DURING OPERATION TO REDUCE RISK OF DAMAGE OR INJURY.

1

Connect the control board to the PLF-S using the mechanism cable connectors at the end of the cable looms. Connect the IR lead into the control box and ensure that the emergency stop is secure.

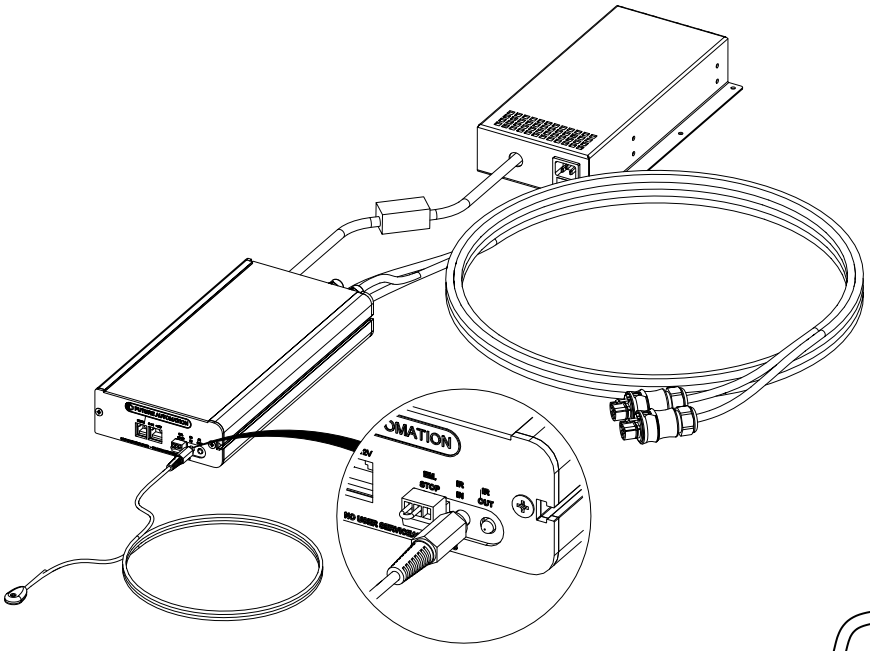

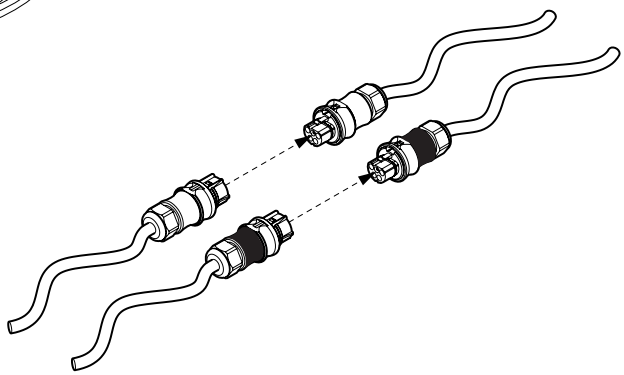

2

Familiarise yourself with the mechanism.

Pressing **'OUT'** on the IR remote will raise the lifting beam.

Pressing **'IN'** will lower the lifting beam.

Pressing **'HOME'** will take the mechanism to an up position with no swivel rotation.

PLF-S
FITTING

1 Place the PLF-S centrally to the aperture in the pit or cabinet. Ensure the top of the mechanism is 10mm (50/127”) below the underside of the floor / cabinet top. Use blocks or a plinth to raise the mechanism if necessary.

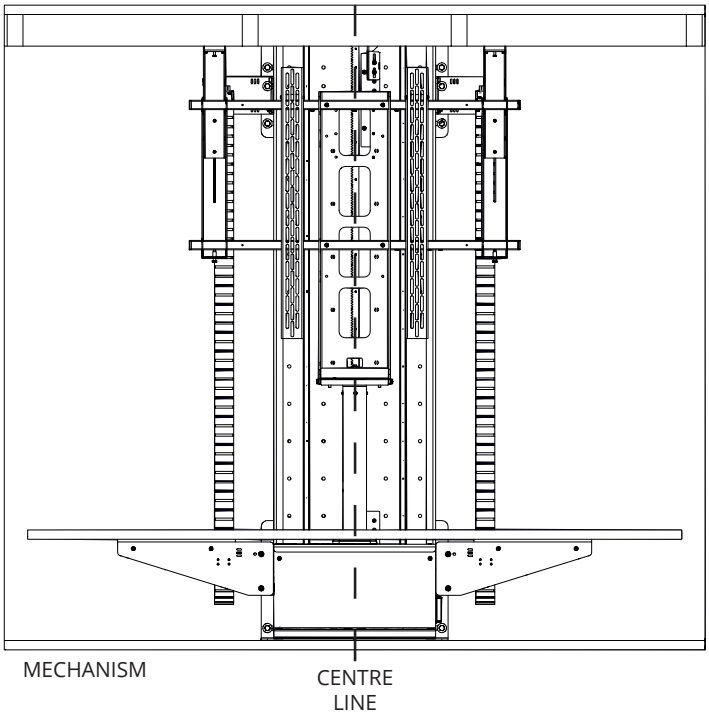

2 Once in the correct position, bolt the mechanism to the back wall / panel.

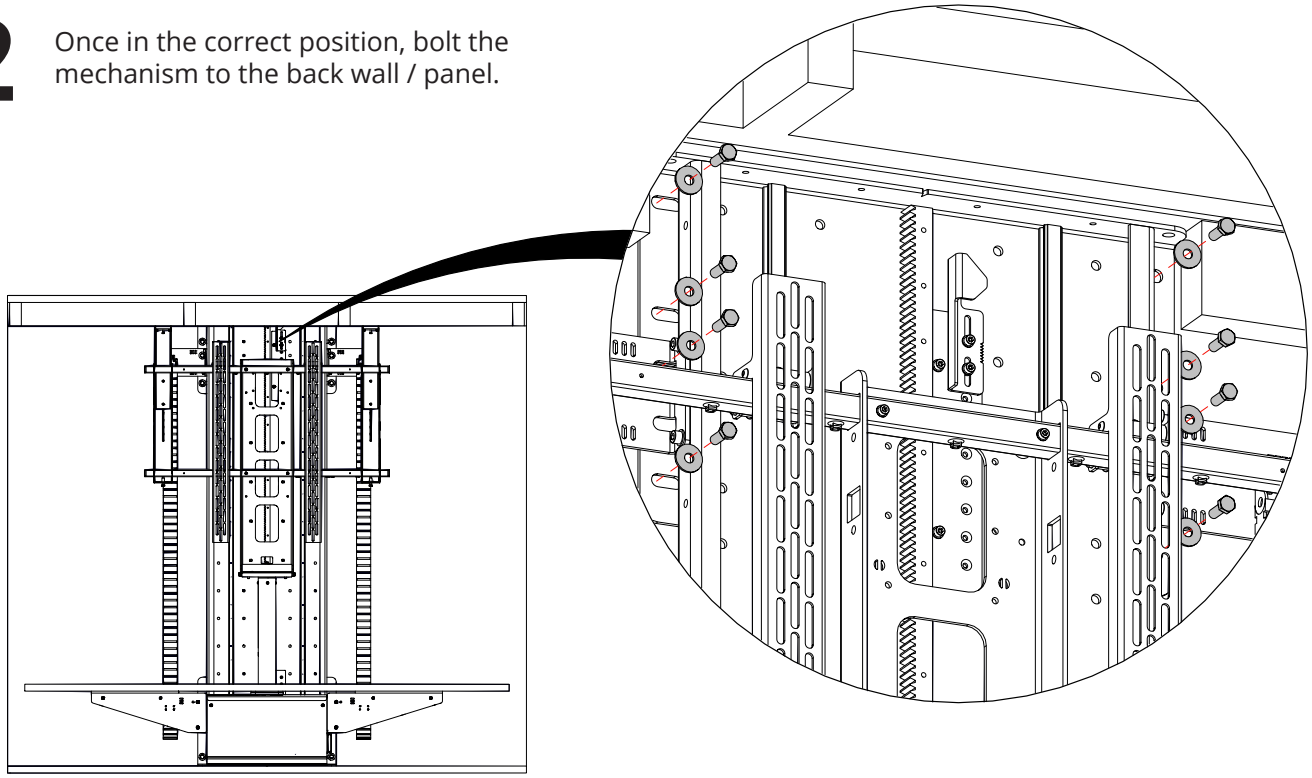

BASE PANEL
FITTING CONT.

1 The base panel requires a cut out detail as shown below.

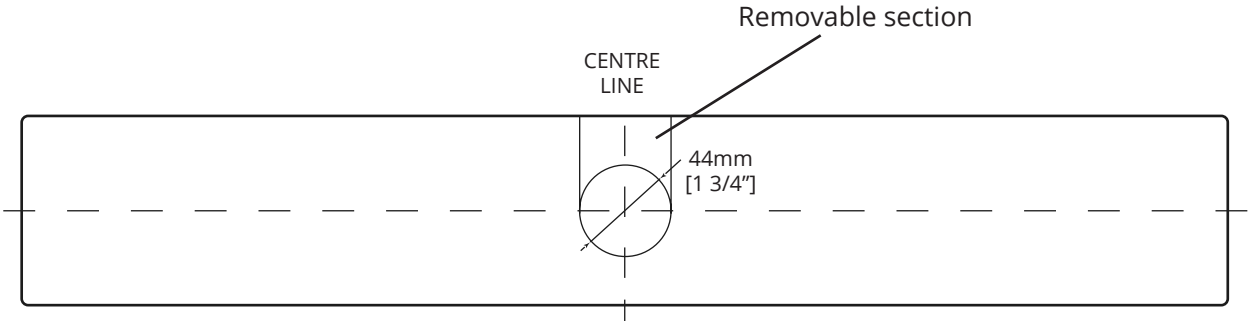

2

Slide base panel around uprights and lower into place.

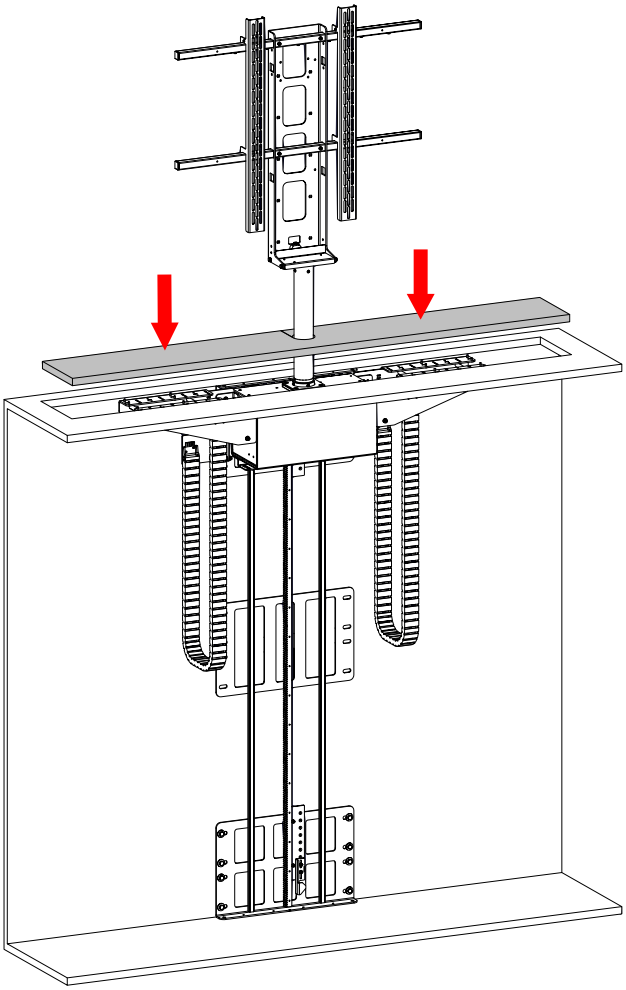

3

Place 5mm shims all round to ensure spacing.

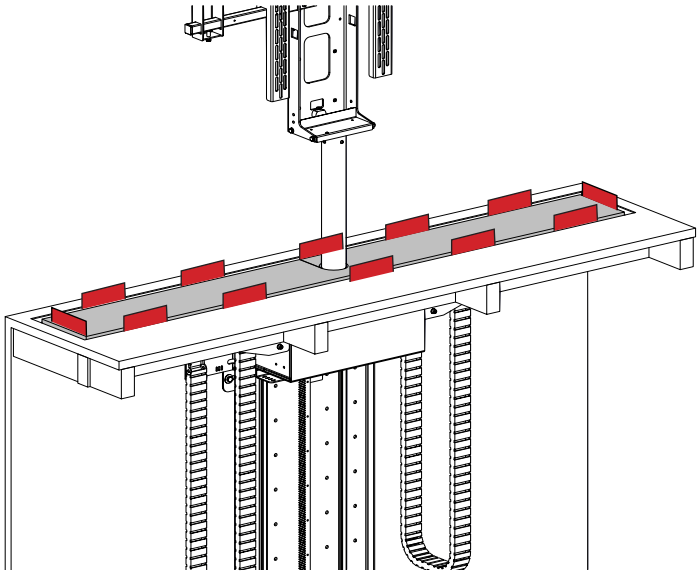

BASE PANEL
FITTING CONT.

4 Using the appropriate fixings, secure the base panel to the mechanism on both sides. Use the IR remote (page 15) to position the lifting beam for easier access.

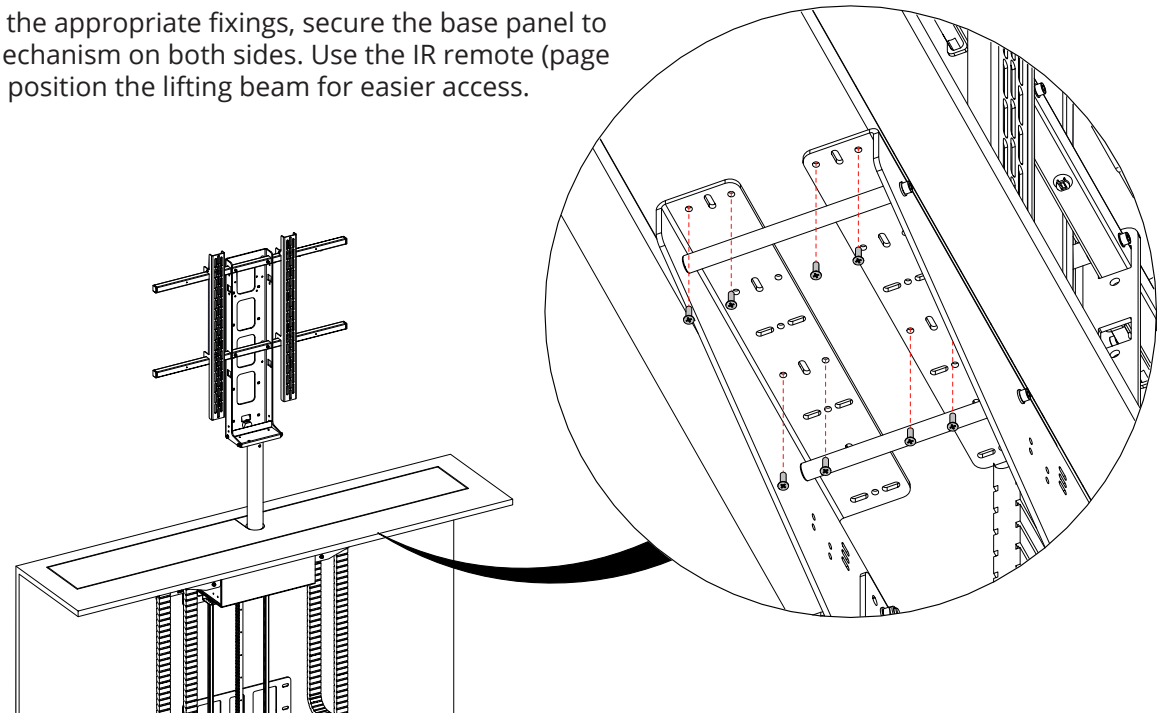

5

Add further bolts at the top and bottom of the mechanism as shown below.

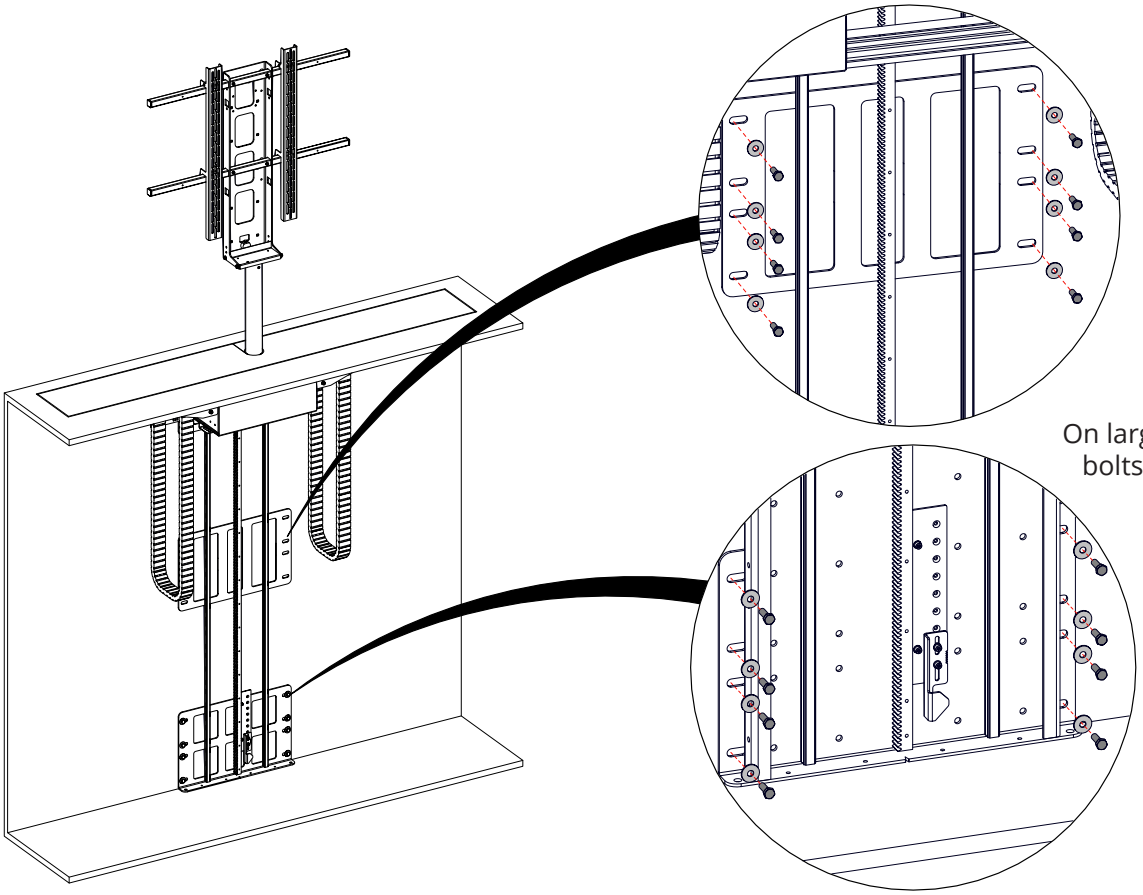

6

On larger mechanisms add bolts into the mid plate.

DRL FLAP
FIXINGS

1 Slide the wall plates down and unhook them from the DRL flap.

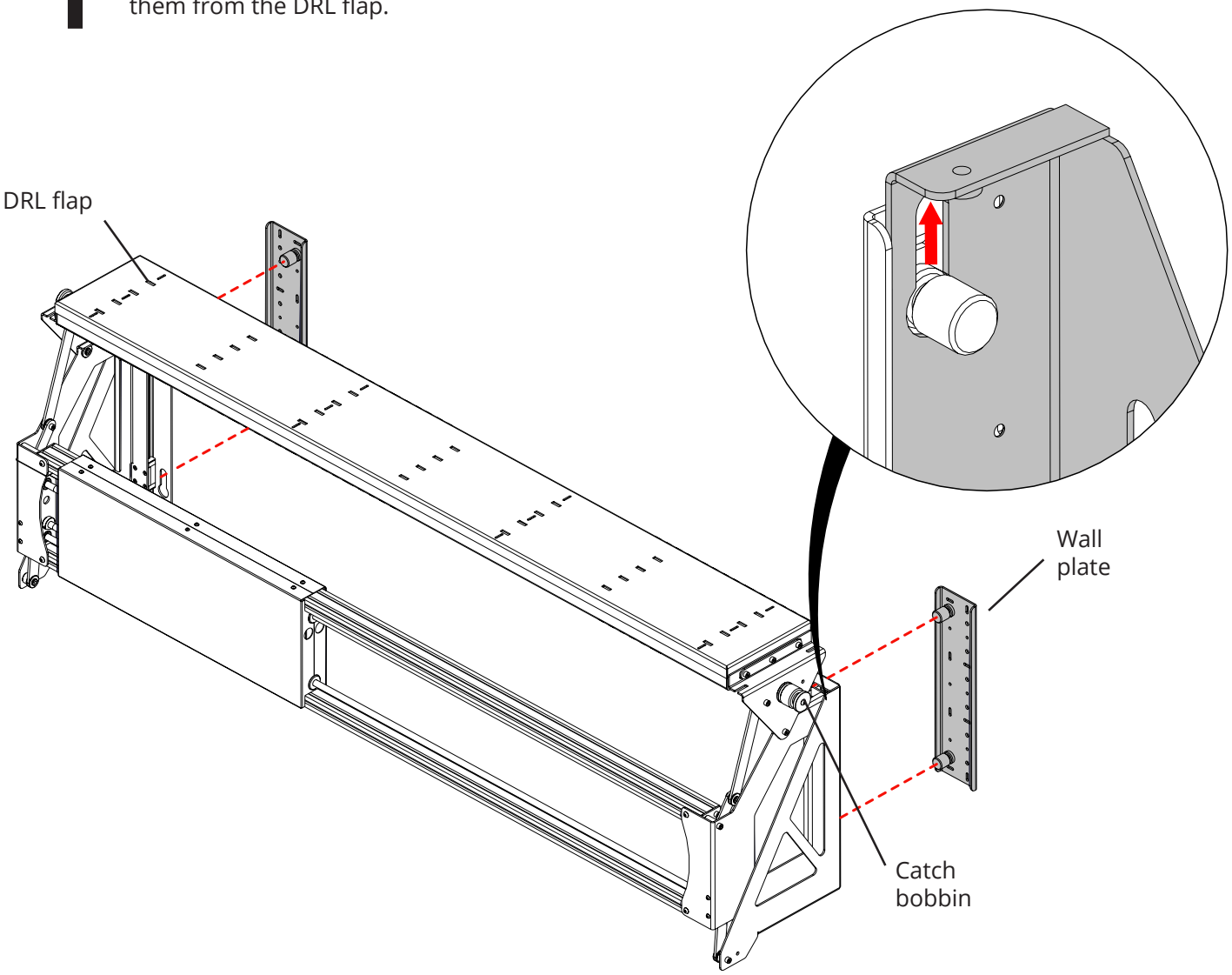

2

Bolt the catch bobbins to either side of the DRL flap.

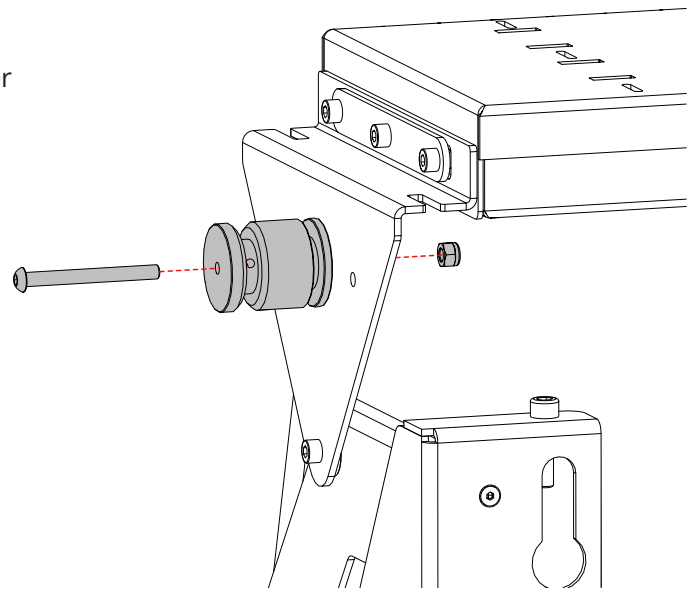

DRL FLAP
FIXINGS CONT.

3 Place the wall plates in the pit to the dimensions shown below.

$$B = \frac{\textbf{MECH WIDTH (mm)} - 952}{2}$$

Example: For a mechanism width of 2020mm, B would be 534mm (21”).

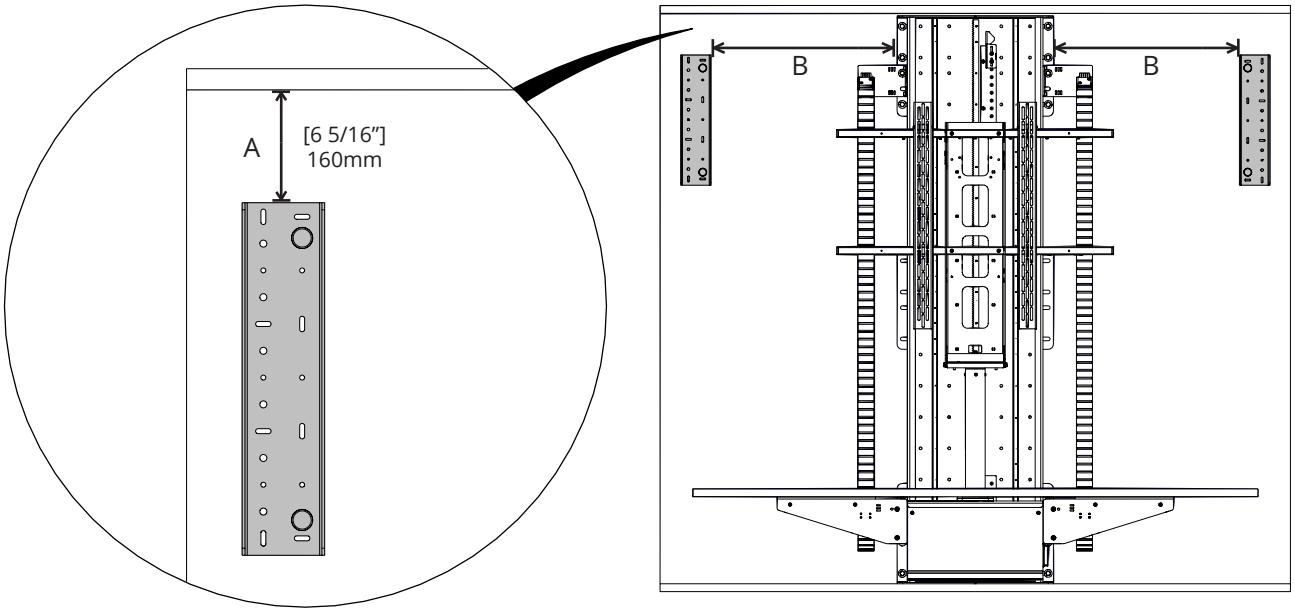

4 Once the wall plates are in place, bolt both to the pit wall using the appropriate fixings. Various bolt fastening positions are available.

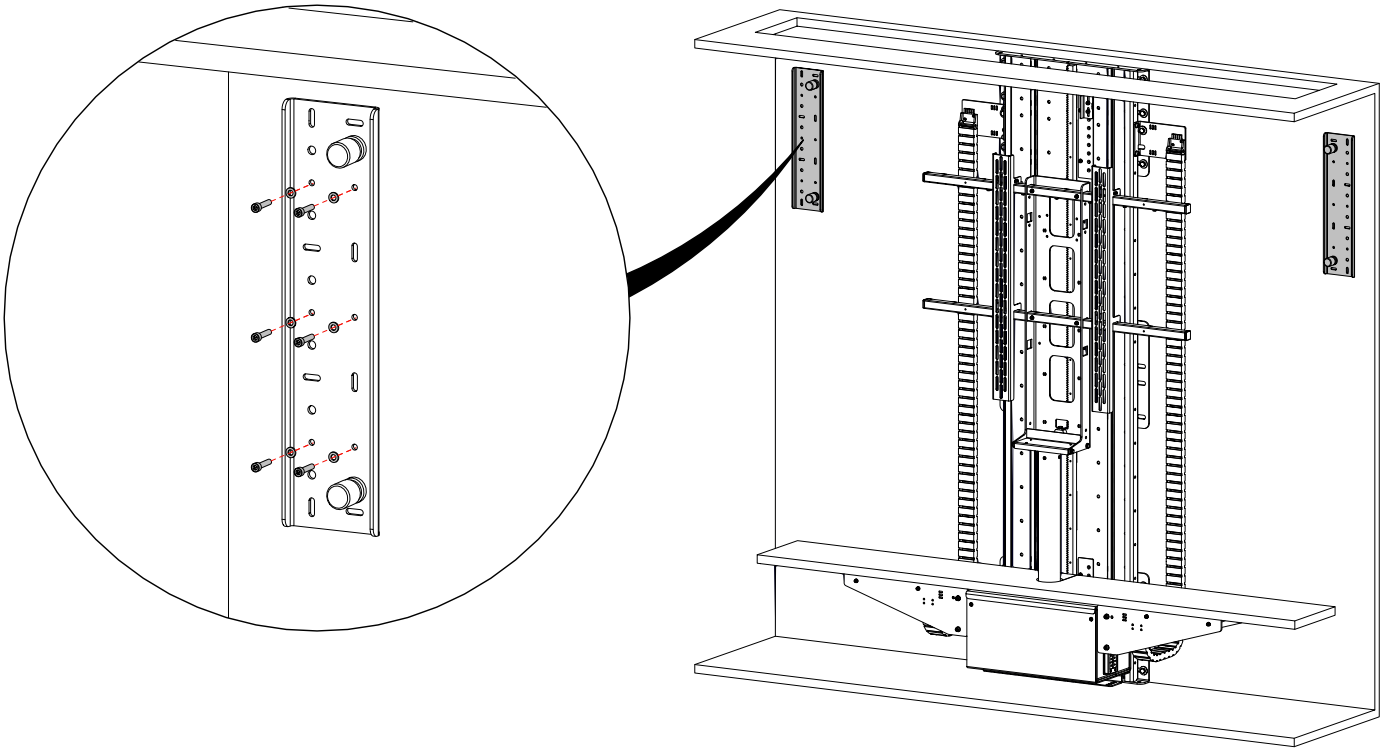

DRL FLAP
FIXINGS CONT.

5 Place the flap catches in the pit to the dimensions shown below.

Mechanism Width	C
≤ 1920mm	(1 5/16") 33mm
> 1920mm	(1 15/16") 50mm

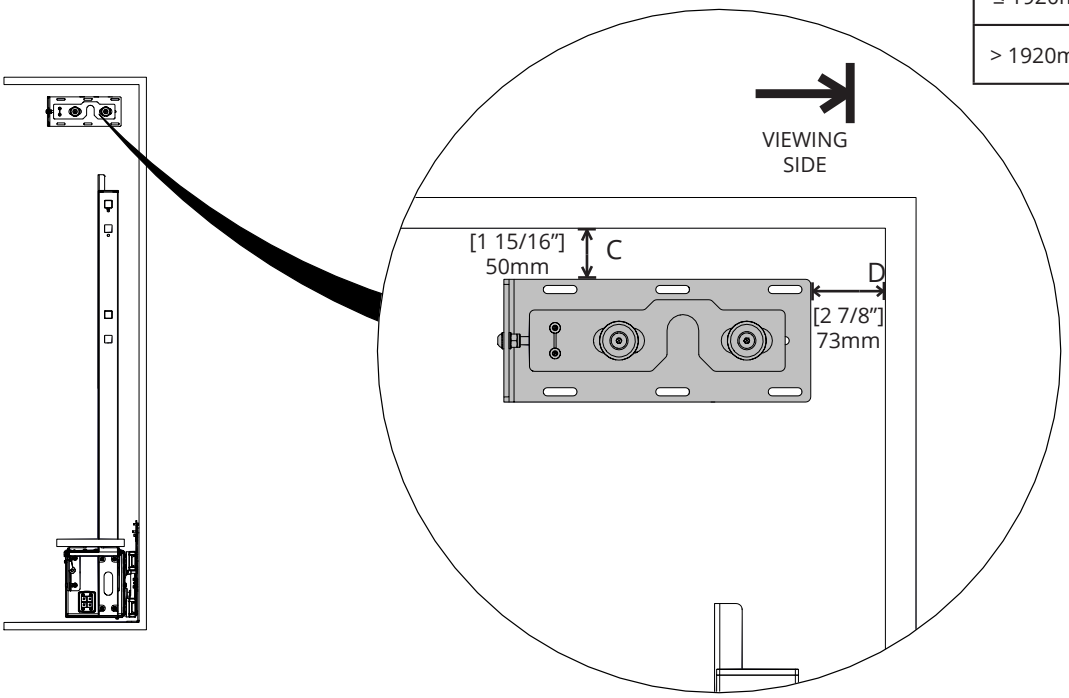

Dimension E is the distance between the flap catches. It must match the **Mechanism Width.** Use blocks to adjust if E is too large.

6 Once the flap catches are in place, bolt them to the pit wall using the appropriate fixings. Ensure to bolt centrally in the slots.

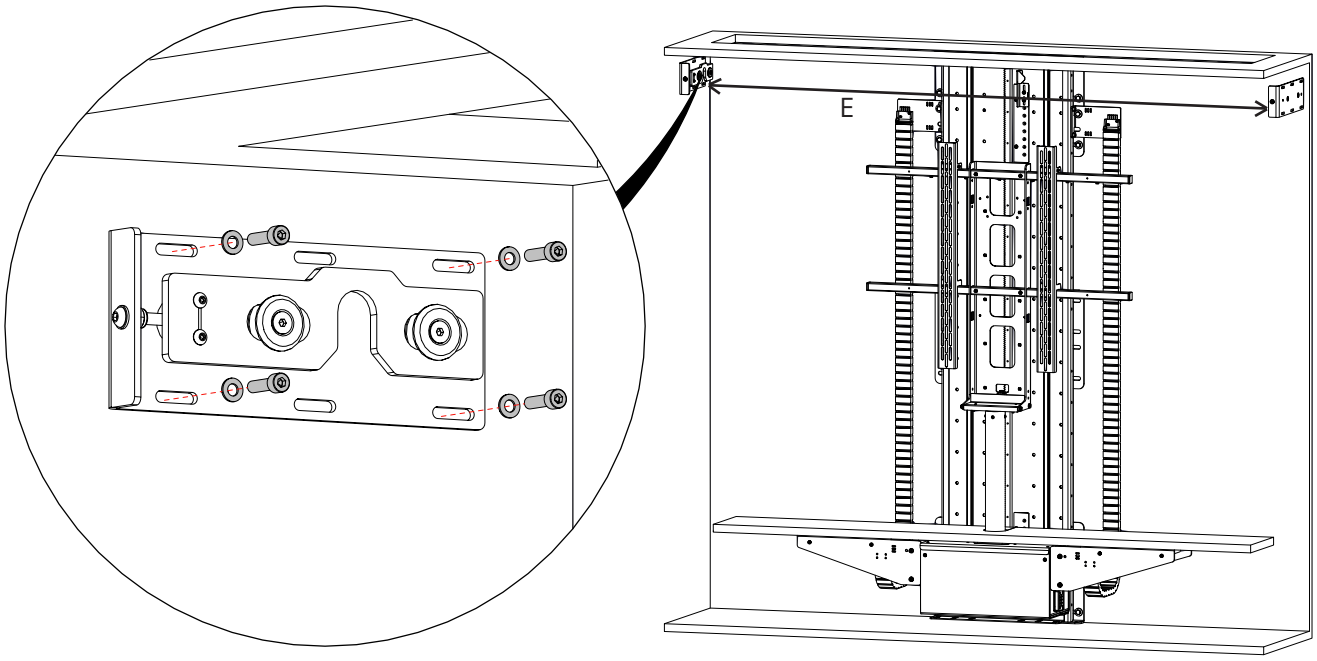

DRL FLAP
FITTING CONT.

2 Hook the DRL flap onto the wall plates in the pit.

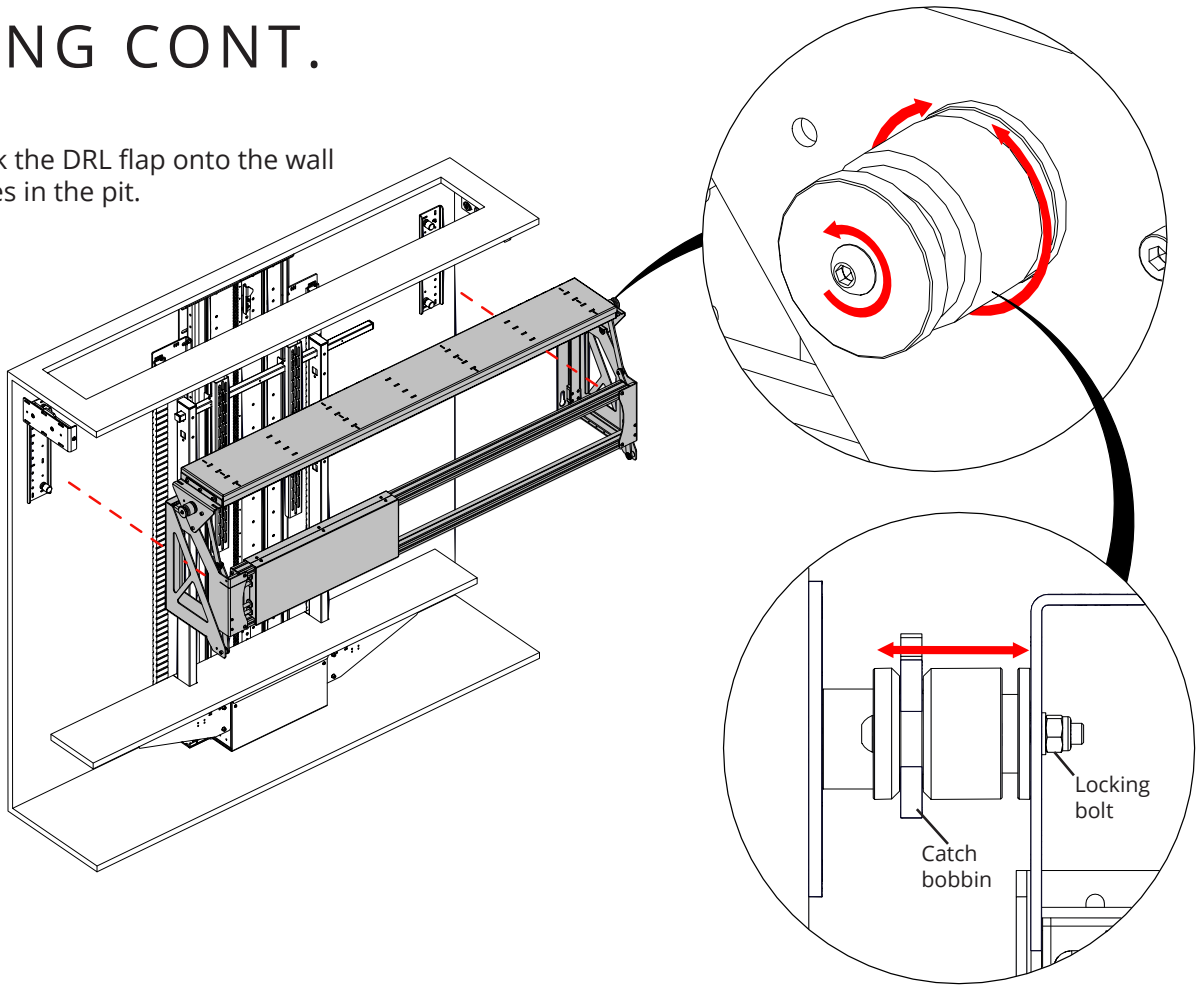

Press 'STOP' before reaching the fully 'IN' position to visually check alignment with flap catches.

3 Whilst holding the locking bolt, loosen the bolt shown above and twist the catch bobbins on both sides to adjust their lengths. Retighten the bolts once the required lengths are reached.

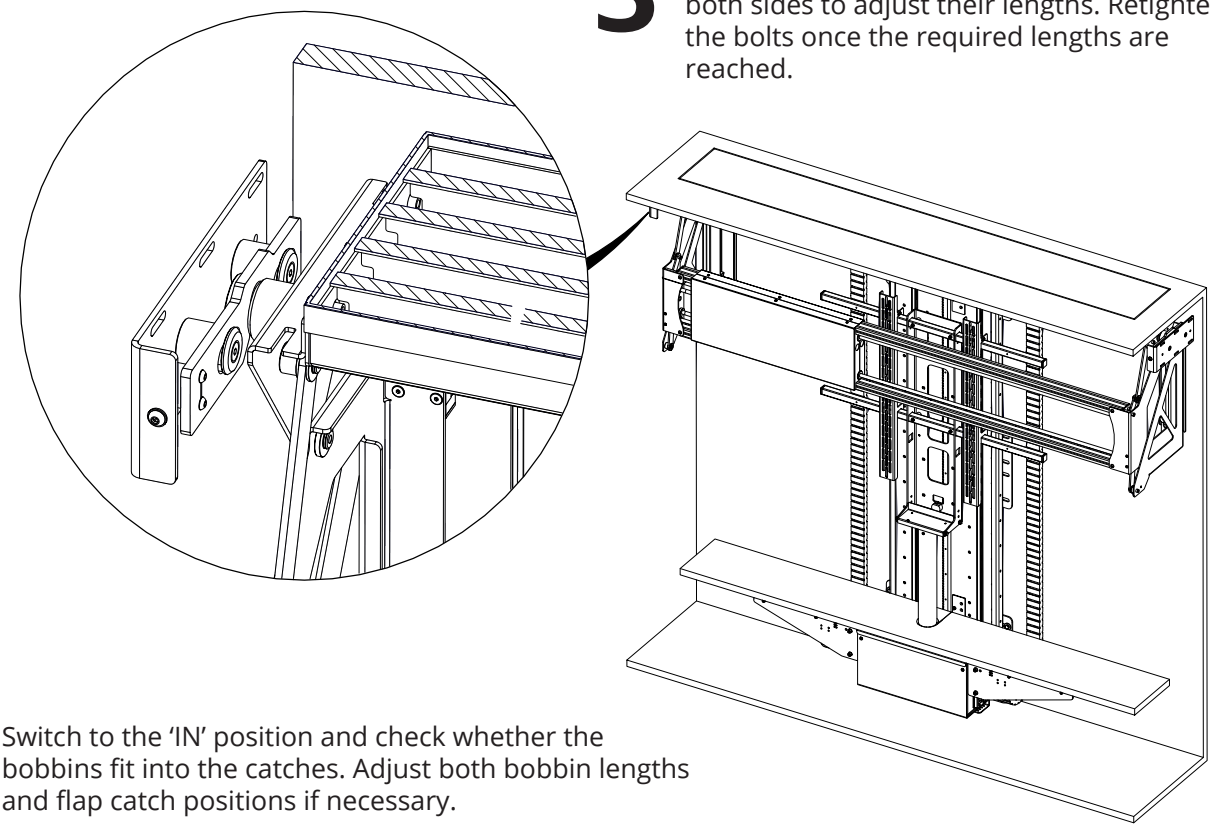

4 Switch to the 'IN' position and check whether the bobbins fit into the catches. Adjust both bobbin lengths and flap catch positions if necessary.

DRL FLAP
FITTING

1 Place the flap panel onto the DRL flap. Ensure there is at least a 3mm gap on all sides.

NOTE: See tech sheet for flap panel dimensions

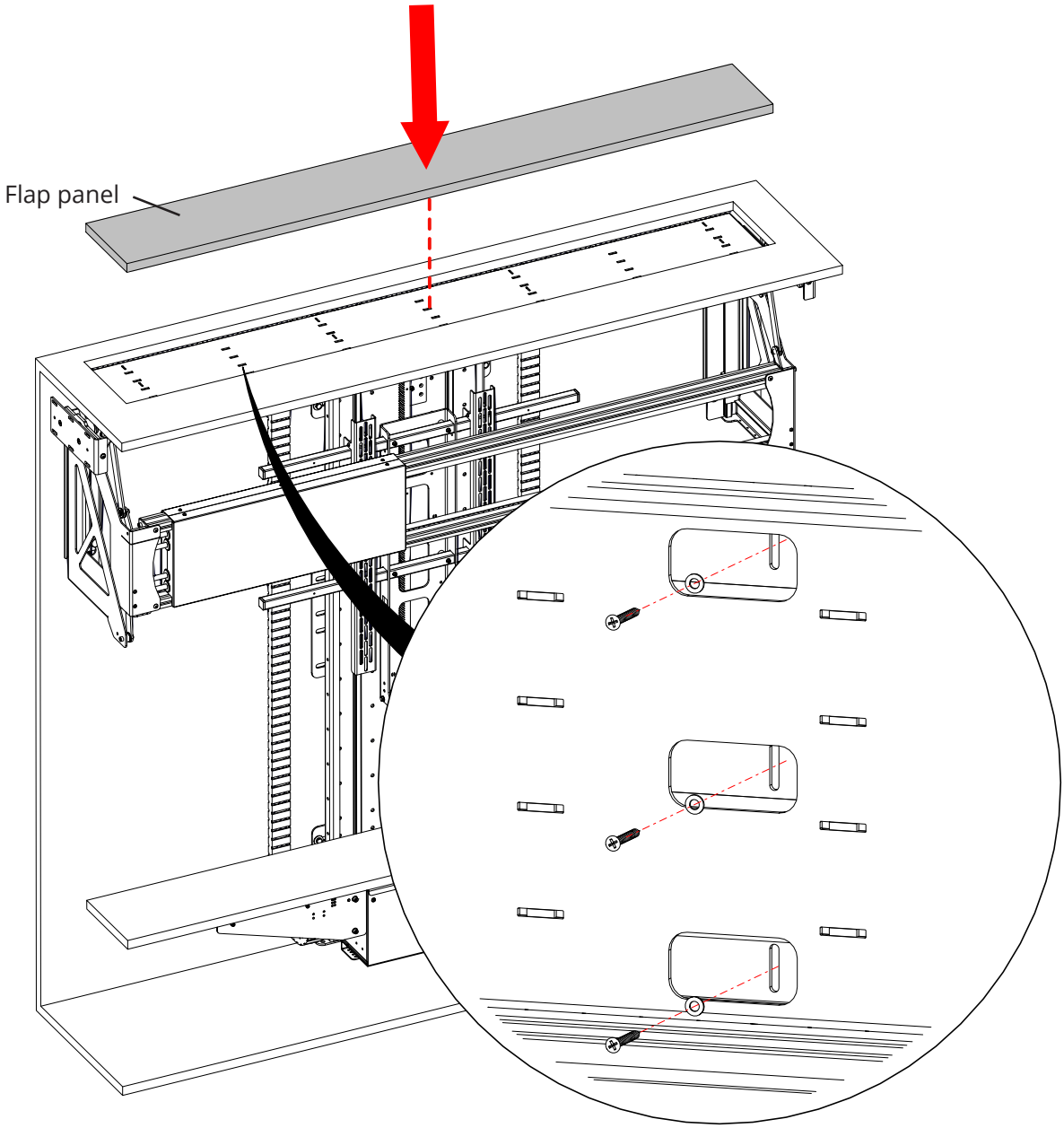

2 From underneath, secure the flap panel to the DRL flap using the appropriate fixings.

DRL FLAP
ADJUSTMENTS

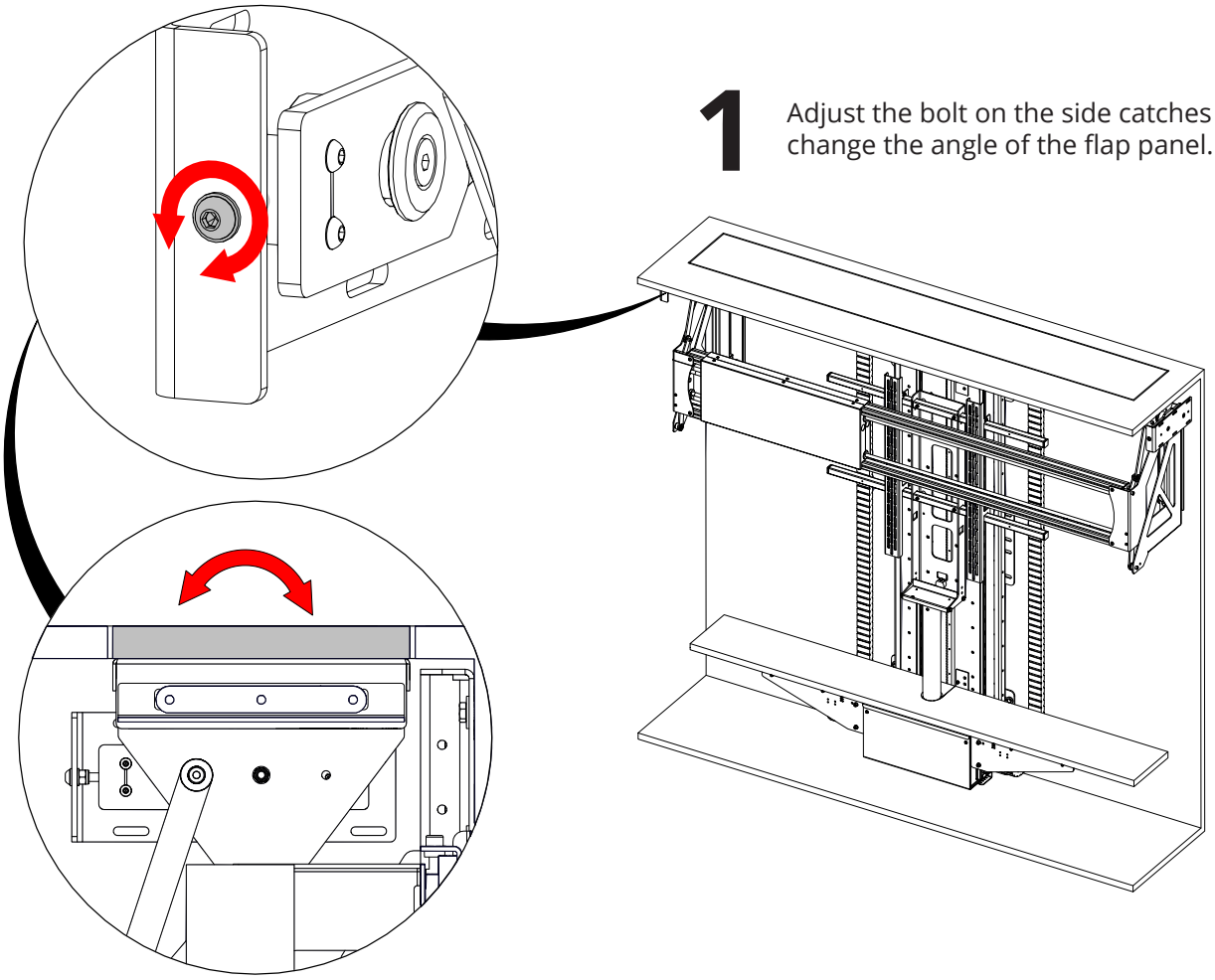

1 Adjust the bolt on the side catches to change the angle of the flap panel.

2 Adjust the bolt shown on the right on both sides of the DRL flap to change the height of the flap panel.

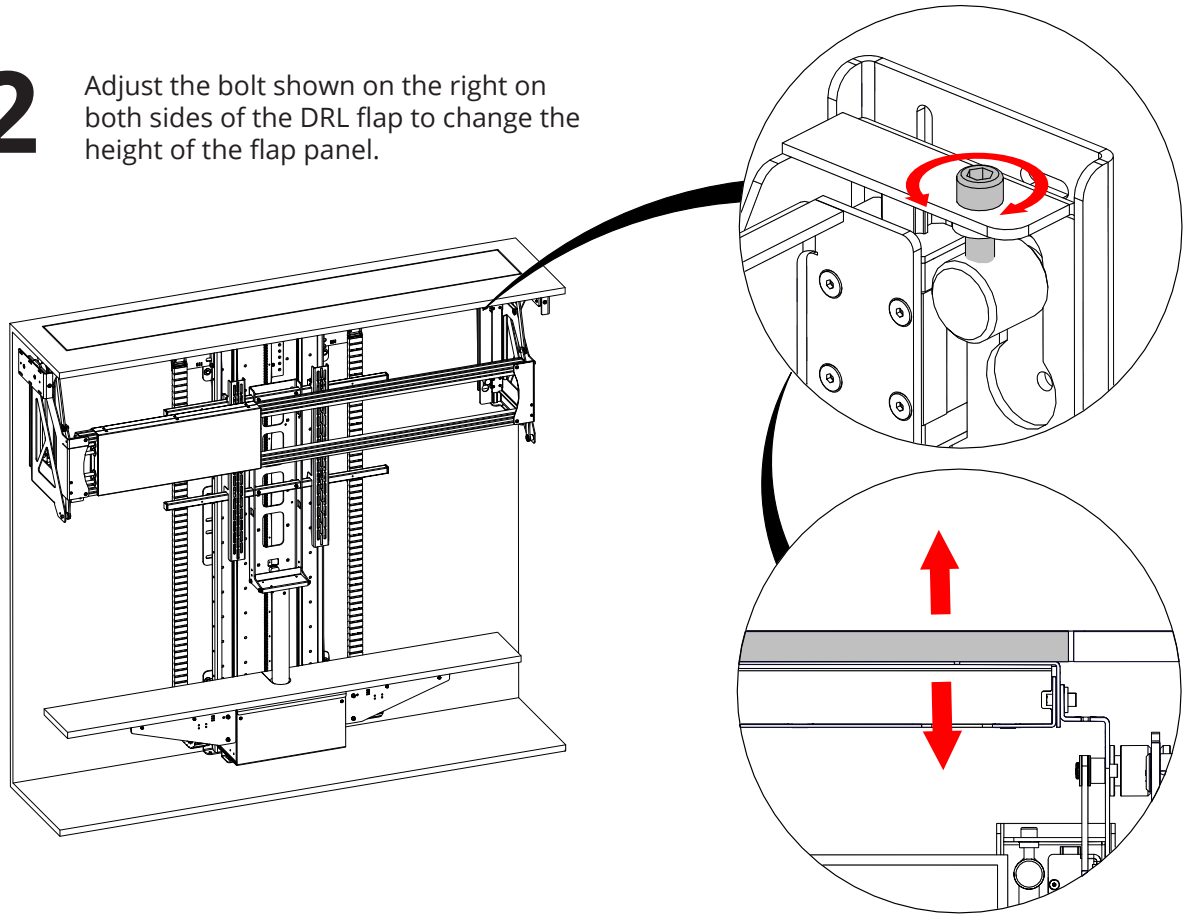

BASE PANEL
ADJUSTMENTS

1 Loosen the bolts shown below to adjust the position of the top switch stop. Use the serrated edge to make small adjustments to change its position. The bottom switch stop is factory set to its lowest position.

Only make small adjusments to top switch to avoid any collisions.

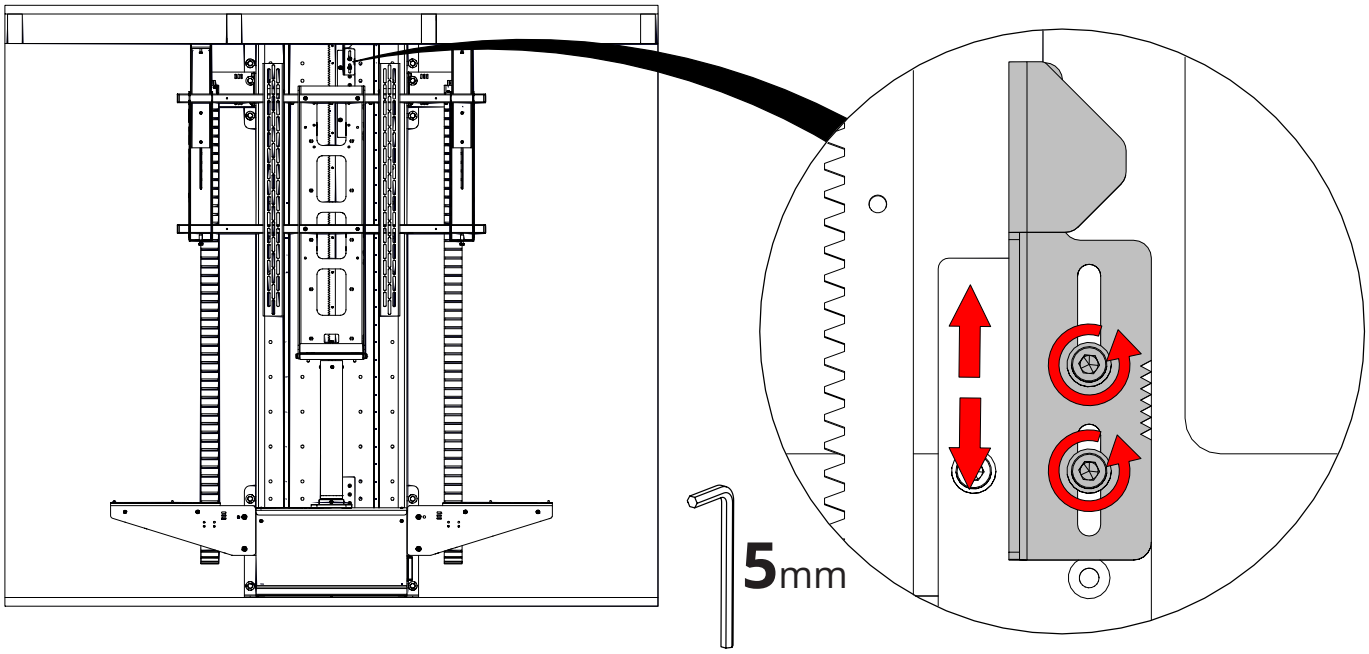

2 Adjust the position of the top switch stop until the base panel is in-line with the floor.

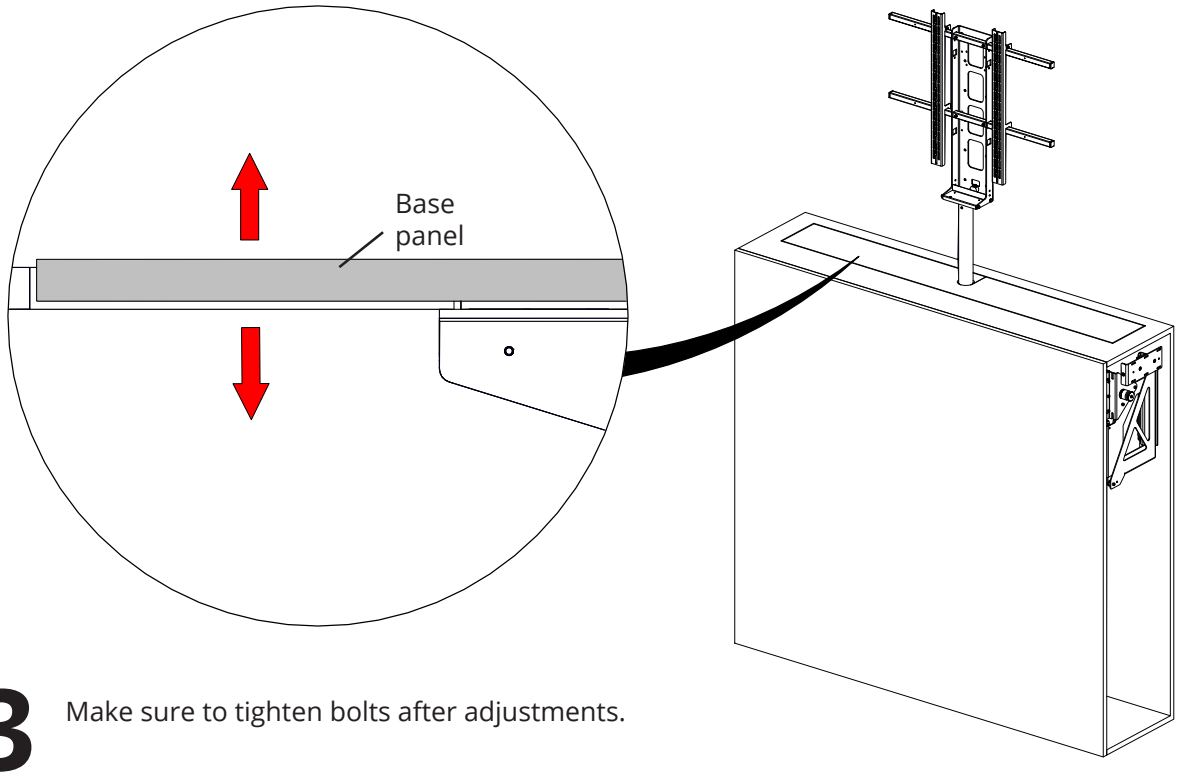

3 Make sure to tighten bolts after adjustments.

FITTING THE SCREEN

1 Lay the screen face down on a padded surface and place the Screen Mount Uprights onto the screens four mount holes. Secure the Screen Mount Uprights to the back of the screen, using the bolts and washers provided in the Fixings Pack as shown below. If the screen has recessed mount holes or if you need to space the uprights off for clearance, use the spacers provided in the Fixings Pack.

NOTE: Screens that do not have standard VESA bolt patterns may require an adapter plate.

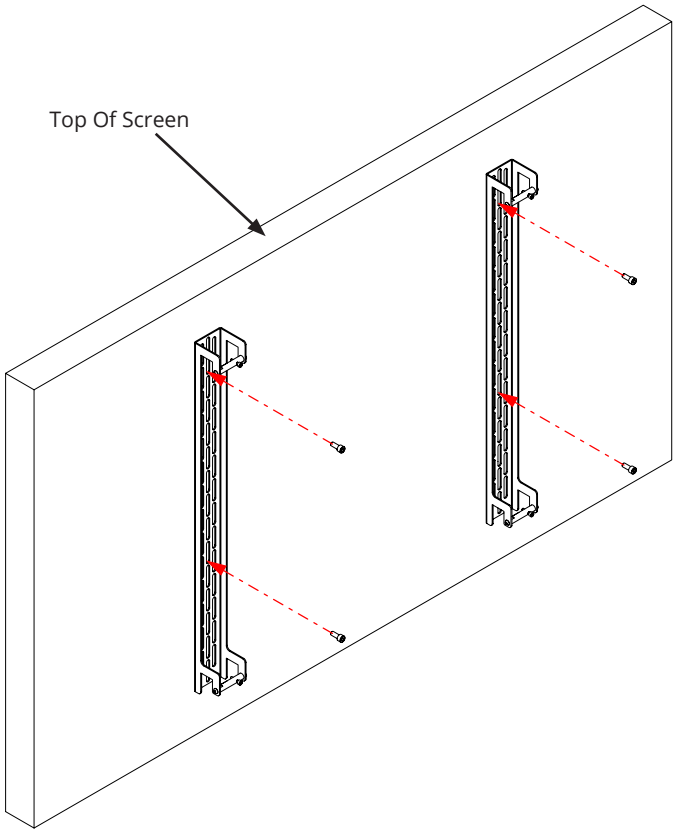

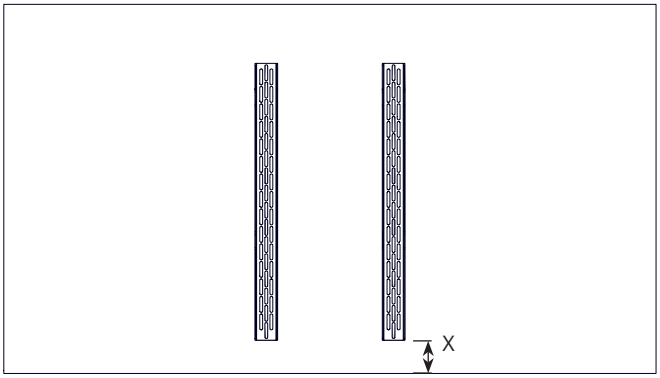

SIZE	X Distance
5	
6	
7	
8	
9	

2 Lift the Screen and Screen Mount Uprights up and onto the Screen Mount Crossbars of the PLF-S Bracket.

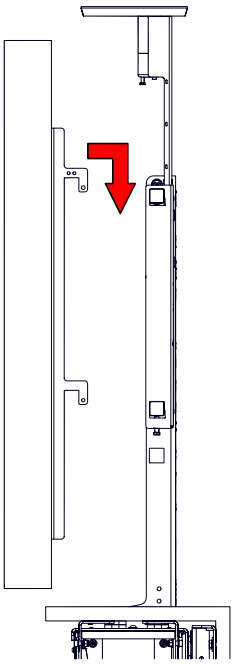

LEVELLING THE SCREEN

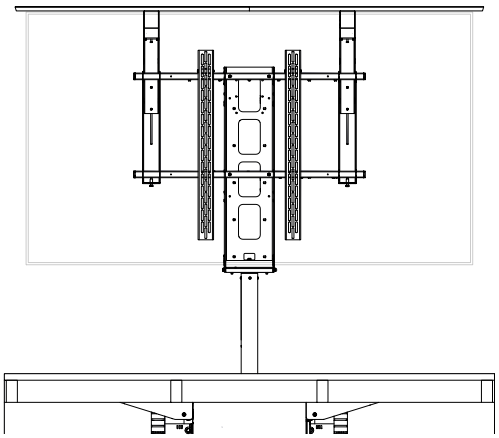

1

The screen uprights have a grub screw that can be adjusted to allow the screen to be levelled.

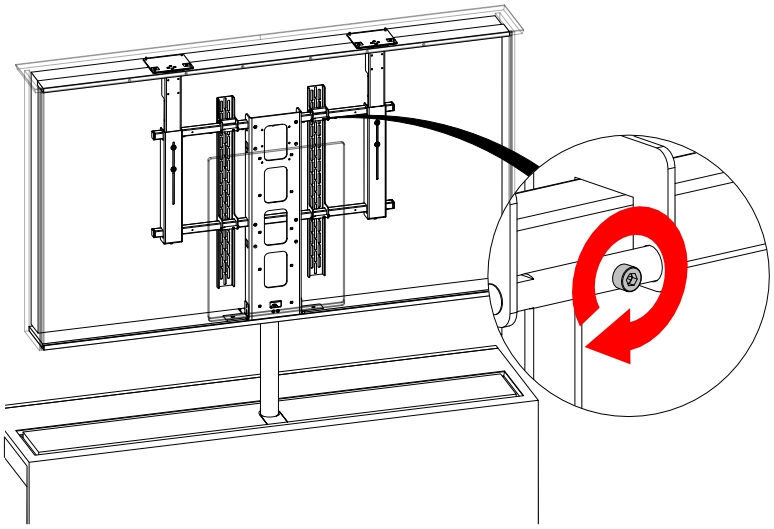

2

Loosen all four pinch bolts and adjust grub screws until the screen sits level.

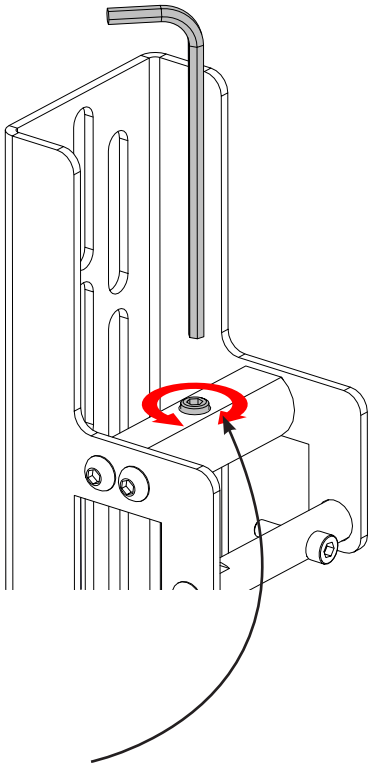

3

When the screen is level remember to re-tighten all four pinch bolts.

Connect all power and signal cables to Screen and check that enough slack has been left for the full range of motion of the bracket.

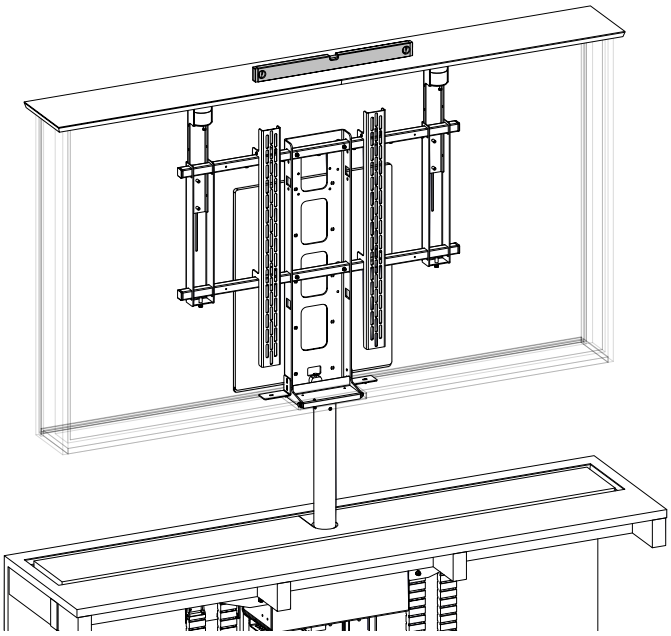

4

Lower top cap to 5mm from top of screen. Using 'IN' and 'STOP' on the IR remote, carefully lower the mechanism to check the top cap aligns correctly with the floor aperture.

CABLE MANAGEMENT

1 Remove the two M4 x 12mm bolts and remove the mount foot cover plate.

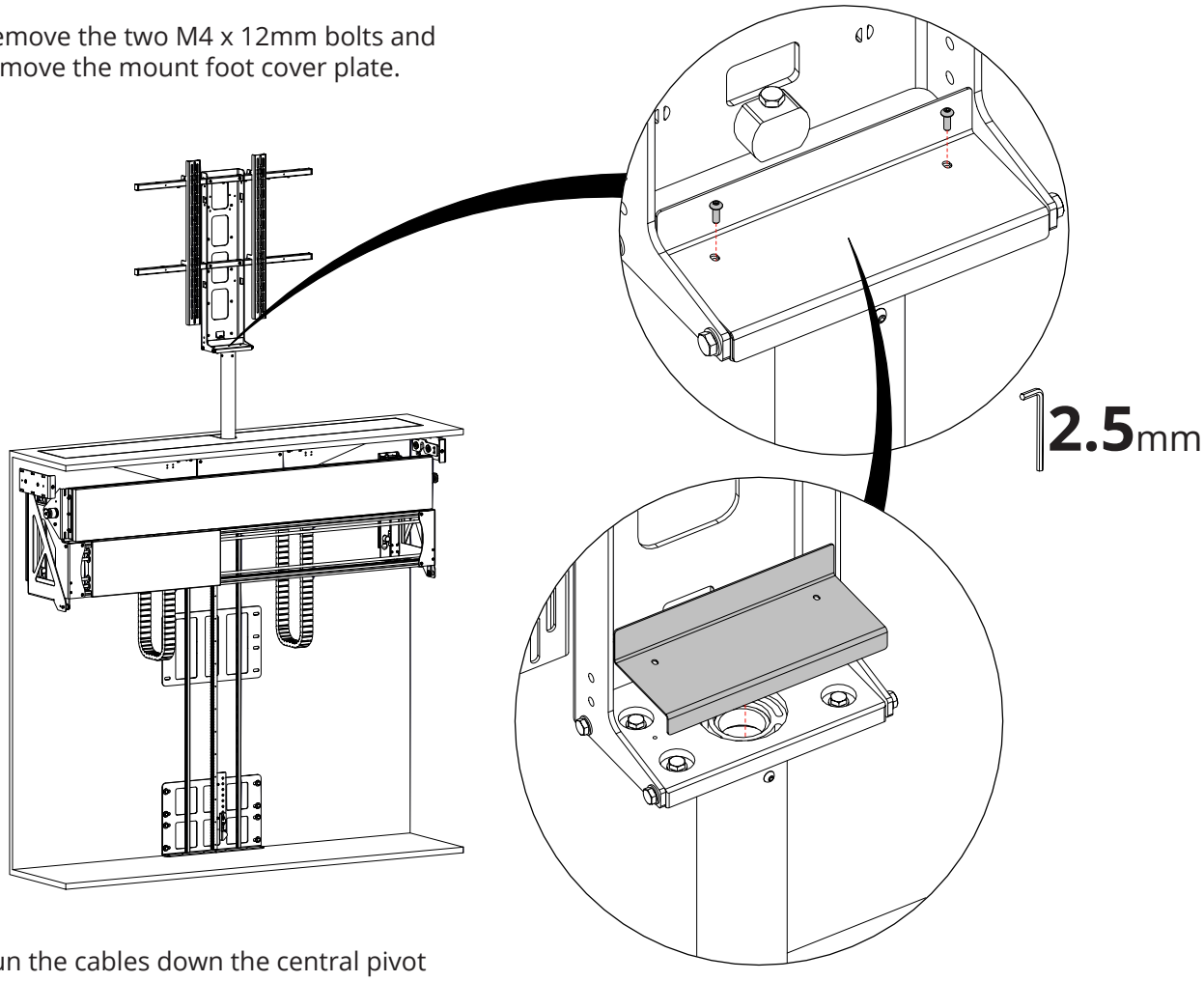

2 Run the cables down the central pivot tube.

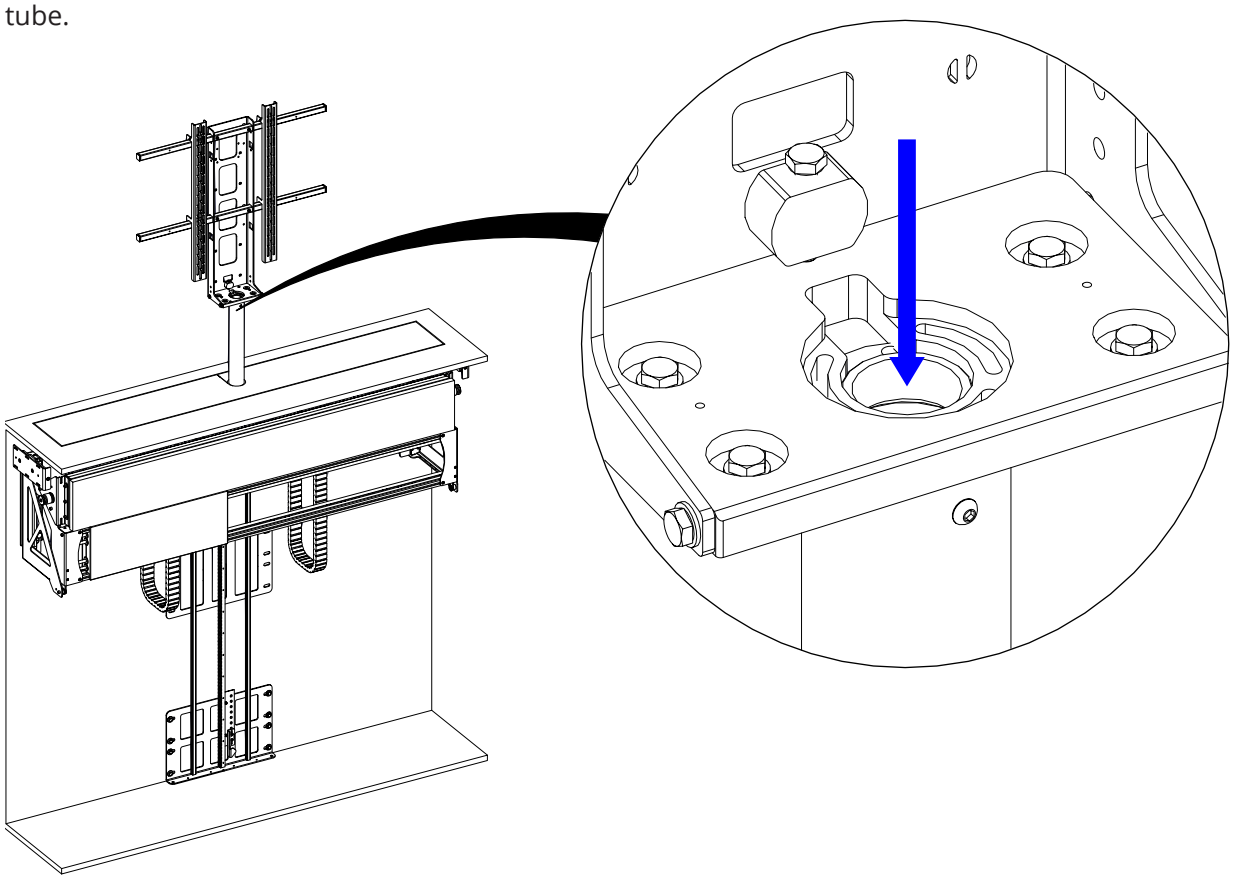

CABLE MANAGEMENT

3 Run the cables under the base panel. This can go both ways, left or right.

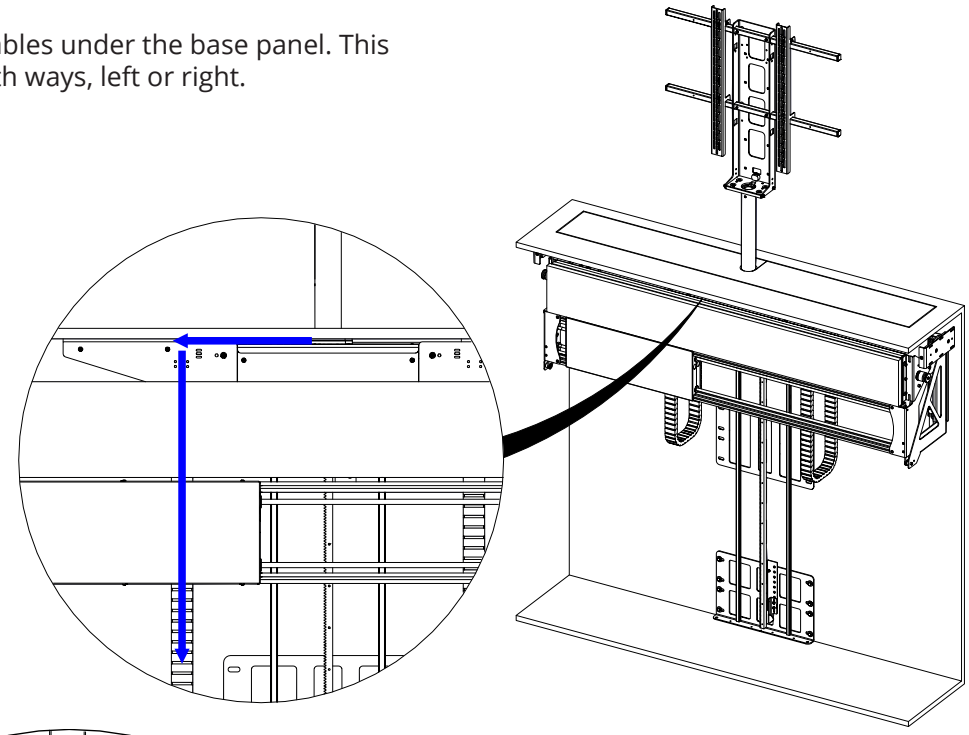

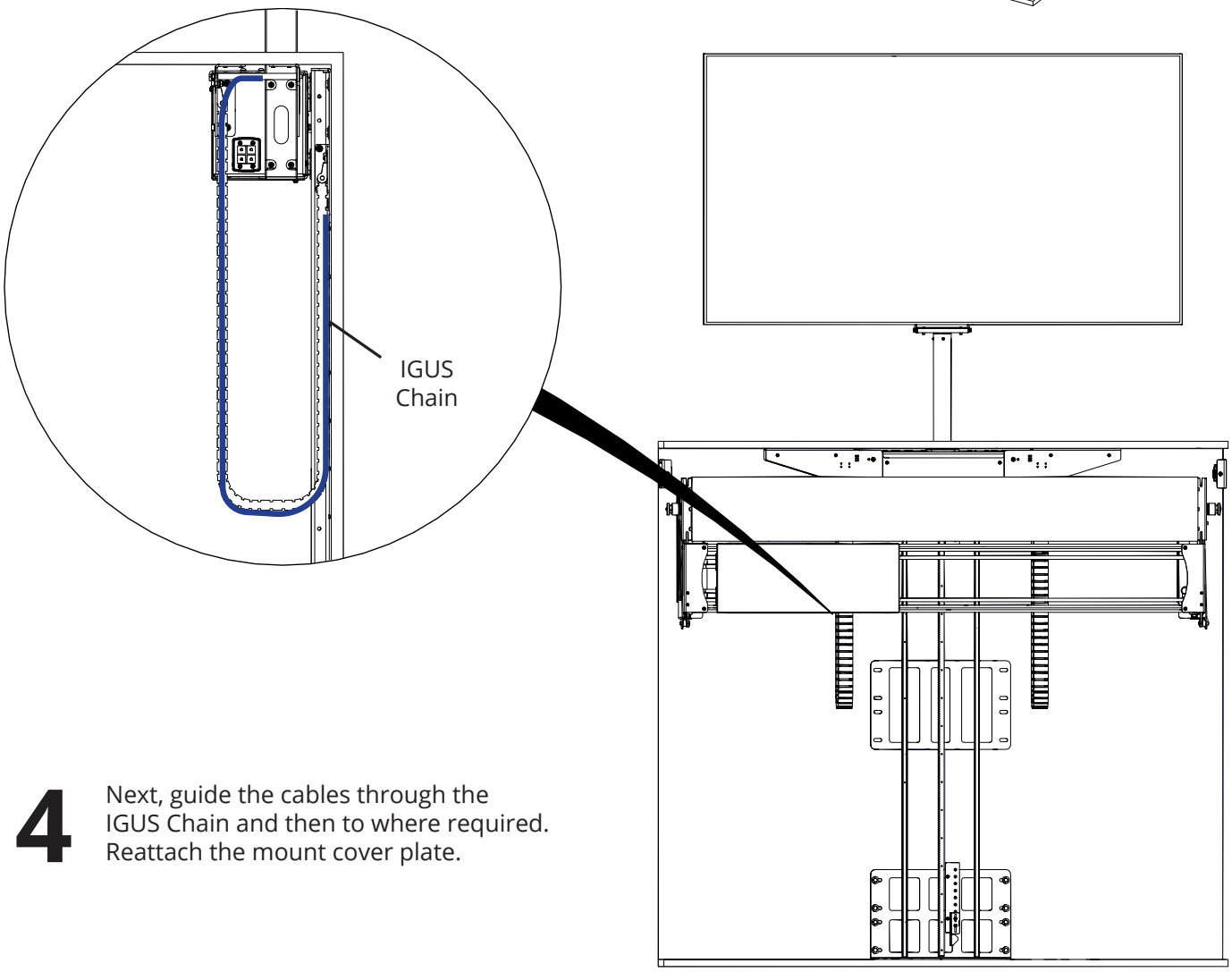

4 Next, guide the cables through the IGUS Chain and then to where required. Reattach the mount cover plate.

5 Ensure the cable loom is routed safely clear of the mechanism and does not obstruct or interfere with its movement. The control box must be stored in a safe, secure, and easily accessible location.

GENERAL
CONTROL

This mechanism has multiple standard control methods, each of which requires a different input method to the control box. For ease, the input sockets on the control board are labelled below.
(Control box size and style may vary to image shown)

CONTROL BOX INPUTS

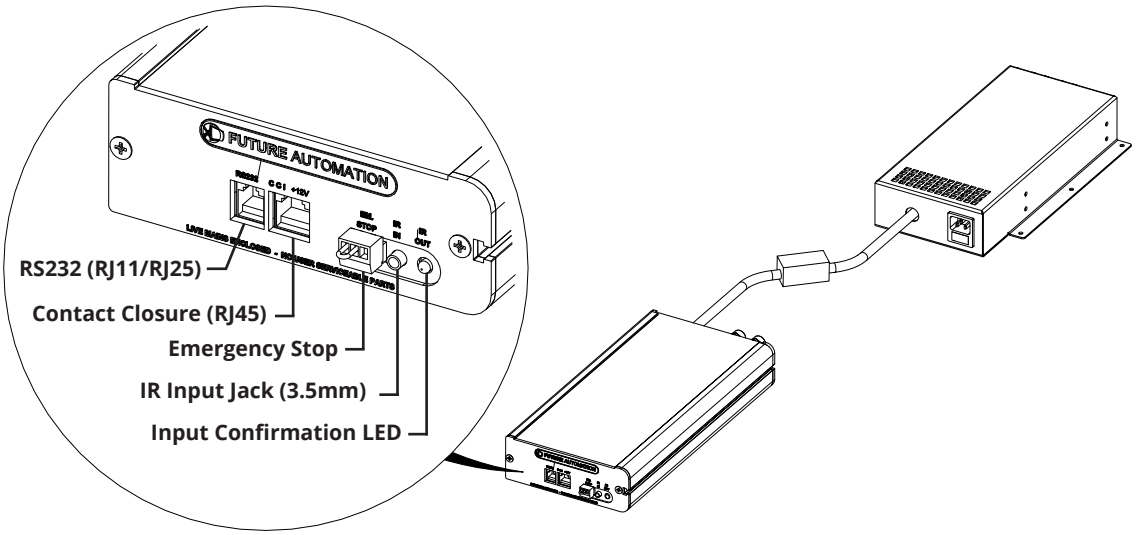

MECHANISM EMERGENCY STOP CONNECTOR

This mechanism features an Emergency Stop Connector, which MUST be plugged into the control box in the connector labelled above for the mechanism to operate. If this connector is not plugged in, the Input Confirmation LED will be permanently lit. As per the red plastic tag attached to the Emergency Stop Connector (and shown below), the small loop of wire in this connector is designed to be replaced by a third party safety mechanism.

REPLACING MECHANISM BATTERIES

The standard Future Automation Infrared (IR) remote control requires x2 AAA batteries to operate. These are provided with the mechanism in the Accessories Pack. These batteries can be replaced as per the image below.

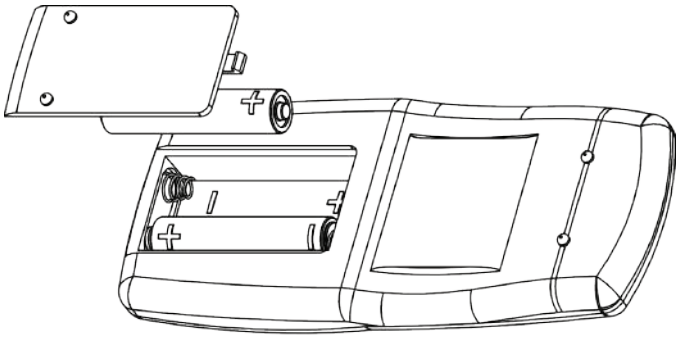

INFRARED
(IR)

This mechanism can be controlled via the supplied 14 button Infrared (IR) Remote Control, paired with the supplied Infrared (IR) lead and sensor.

The mechanism's functions can be controlled by plugging the Infrared (IR) lead and sensor into the 3.5mm IR Input Jack shown on the General Mechanism Control page.

Confirmation of Infrared (IR) input will be shown by a single flash of the large green LED located on the end of the control box.

As Infrared (IR) control works via line of sight, the Infrared (IR) sensor must be directly viewable from the location the remote control is being used from.

Infrared (IR) Remote Control Button Layout

NOTE: Commands involving multiple keys requires each successive key to be pressed within 2 seconds of each other.

IN - The mechanism is brought fully in.

OUT - Raises the mechanism fully out. No rotation.

STOP - Stops the operation of the mechanism.

HOME - Takes the screen to a position with no rotation.

A-C - Takes the screen to the rotation position saved to buttons **'A-C'**.

< OR > - Rotates screen left or right.

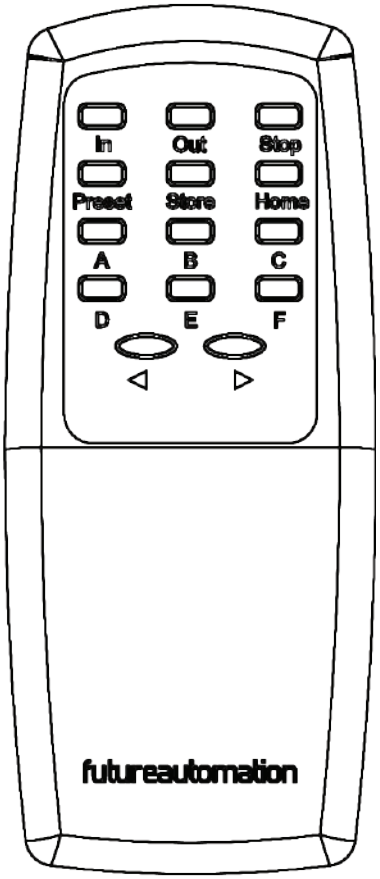

PRESET - Takes the screen to the rotation position saved to the **'PRESET'** button.

STORE, PRESET - Stores the current rotation position to the **'PRESET'** button.

STORE, A/B/C - Stores the current rotation position to buttons **'A/B/C'**.

STORE, E - Clears right and left swivel rotation limit and allows 180° rotation left and right.

STORE, F - Sets right rotation limit.

STORE, D - Sets left rotation limit.

Future Automation recommends that this mechanism operates with hold-to-run (Dead Man Switch) for user safety. This can be activated if required. https://fa.support/Files/PL-SAFETY-1

IMPORTANT

Only buttons indicated above are functional with the product. Any other button press will STOP the mechanism.

RADIO FREQUENCY
(RF)

If purchased with the Radio Frequency (RF) control option, this mechanism can be controlled via the supplied 4 button Radio Frequency (RF) Remote Control, paired with the in-built Radio Frequency (RF) sensor.

Confirmation of Radio Frequency (RF) input will be shown by a single flash of the large green LED located on the end of the control box.

Radio Frequency (RF) control does not require line of site, but signal can affected cabinet thickness, cabinet material or other electronic signals (i.e. strong WIFI signals).

Radio Frequency (RF) Remote Control Button Layout

IN - Brings the mechanism into the pit.

RIGHT - Rotates the mechanism towards the right.

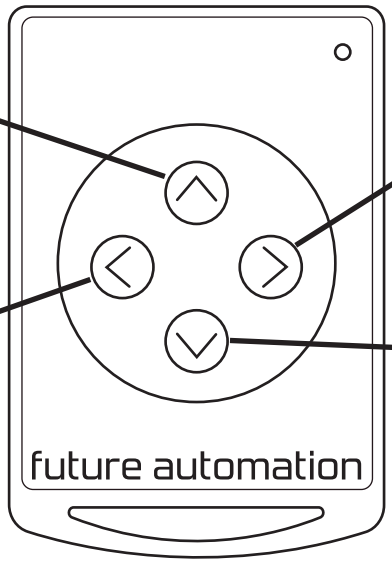

OUT - Brings the mechanism out of the pit.

LEFT - Rotates the mechanism towards the left.

The Radio Frequency (RF) Remote Control can only be used to recall the above functions.

The mechanism limits and preset positions must be programmed using the supplied Infrared (IR) Remote Control.

IMPORTANT
Pressing any button while the mechanism is moving will STOP the mechanism.

Future Automation recommends that the mechanism runs on a Dead Man (hold-to-run) system for user safety. The installer is responsible for carrying out the necessary risk assessments and end user training before proceeding without Dead Man functionality.

CONTACT CLOSURE

This Mechanism can be controlled via Contact Closure, utilising the 8 Pin RJ45 Connector attached to a length of CAT5 (Type 568A or 568B) cable.

The mechanism's functions can be controlled by plugging this into the RJ45 port on the mechanism control board, then shorting pins 1-8 on this connector as shown in the Contact Closure Input Table below.

Confirmation of Contact Closure input will be shown by a single flash of the large green LED located on the end of the control box, as well as illumination of the corresponding Contact Closure LED on the printed circuit board as shown below.

RJ45 Pin Layout

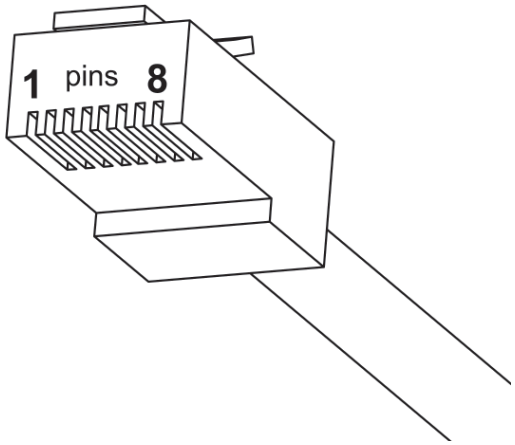

Contact Closure LED Layout

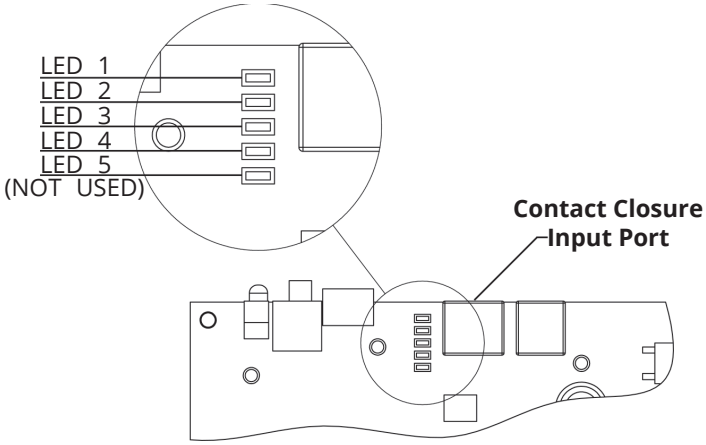

CONTACT CLOSURE INPUT TABLE

PIN	DESCRIPTION	MOMENTARY ACTION	DEAD-MAN SWITCH ACTION
1	12V SUPPLY	12V SUPPLY - CURRENT LIMITED	12V SUPPLY - CURRENT LIMITED
2	12V LATCH		
3	GROUND	GROUND	GROUND
4	PRESET D	SHORT TO GROUND (PIN 3), MAKES DEVICE GO TO PRESET D.	MOTION TO PRESET D REQUIRES CONTINUOUS SHORT TO GROUND (PIN 3); RELEASING THE SHORT STOPS MOVEMENT IMMEDIATELY.
5	DEVICE LEFT	MOMENTARY SHORT TO GROUND (PIN 3), WILL MAKE DEVICE GO LEFT OR STOP IF MOVING.	MOTION LEFT REQUIRES CONTINUOUS SHORT TO GROUND (PIN 3); RELEASING THE SHORT STOPS MOVEMENT IMMEDIATELY.
6	DEVICE RIGHT	MOMENTARY SHORT TO GROUND (PIN 3), WILL MAKE DEVICE GO RIGHT OR STOP IF MOVING.	MOTION RIGHT REQUIRES CONTINUOUS SHORT TO GROUND (PIN 3); RELEASING THE SHORT STOPS MOVEMENT IMMEDIATELY.
7	DEVICE HOME/ STOP	MOMENTARY SHORT TO GROUND (PIN 3), WILL MAKE DEVICE GO HOME OR STOP IF MOVING.	MOTION OUT REQUIRES CONTINUOUS SHORT TO GROUND (PIN 3); RELEASING THE SHORT STOPS MOVEMENT IMMEDIATELY.
8	DEVICE IN / STOP	MOMENTARY SHORT TO GROUND (PIN 3), WILL MAKE DEVICE GO IN OR STOP IF MOVING.	MOTION IN REQUIRES CONTINUOUS SHORT TO GROUND (PIN 3); RELEASING THE SHORT STOPS MOVEMENT IMMEDIATELY.

WIRE/CABLE TYPE		LED INDICATOR
568A	568B	
W G	W O	
G	O	
W O	W G	
B	B	
W B	W B	LED 4
O	G	LED 3
W BR	W BR	LED 2
BR	BR	LED 1

Future Automation recommends that the mechanism runs on a Dead Man (hold-to-run) system for user safety. The installer is responsible for carrying out the necessary risk assessments and end user training before proceeding without Dead Man functionality.

RS232
CONTROL

This Mechanism can be controlled via RS232, utilising a 6 Pin RJ11/RJ25 connector OR 9 Pin Serial connector attached to a length of 6 core cable.

The mechanism's functions can be controlled by plugging this into the RJ11/RJ25 port on the mechanism control box, then inputting the RS232 commands shown in the RS232 Input Table below.

Confirmation of Contact Closure input will be shown by a single flash of the large green LED located on the end of the control box.

RJ11/RJ25 PIN LAYOUT
PIN 1: TX
PIN 6: RX
PIN 3 & 4: GROUND

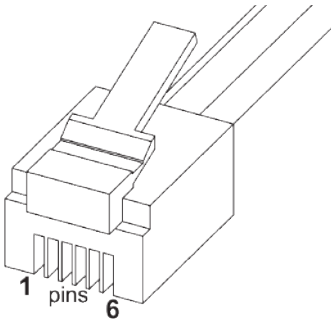

SERIAL PIN LAYOUT
PIN 2: RX
PIN 3: TX
PIN 5: GROUND

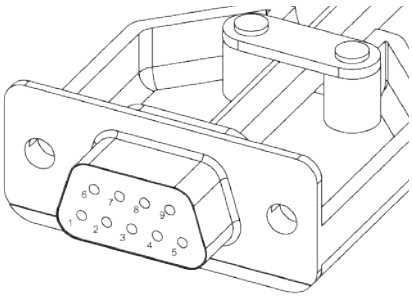

RS232 PROGRAMMING DETAILS

Baud Rate: 9600

Stop Bit: 1

Parity: None

Databits: 8

RJ11/RJ25	Func.	9 PIN Serial	Colour
PIN 1	TX-RX	PIN 2	Blue
PIN 3	GROUND	PIN 5	Green
PIN 4	GROUND	PIN 5	Red
PIN 6	RX-TX	PIN 3	White

RS232 INPUT TABLE

IMPORTANT - Ensure all protocols are entered exactly as written below, including Carriage Return (ENTER / ASCII 13)

Protocol	Action
fa_in Carriage Return (Enter / ASCII 13)	Device IN
fa_out Carriage Return (Enter / ASCII 13)	Device OUT no movement to swivel
fa_stop Carriage Return (Enter / ASCII 13)	Device STOP (At any position)
fa_home Carriage Return (Enter / ASCII 13)	Device UP and swivel parallel
fa_left Carriage Return (Enter / ASCII 13)	Device UP and rotation to LEFT limit
fa_right Carriage Return (Enter / ASCII 13)	Device UP and rotation to RIGHT limit
fa_a Carriage Return (Enter / ASCII 13)	Device OUT and preset position A
fa_b Carriage Return (Enter / ASCII 13)	Device OUT and preset position B
fa_c Carriage Return (Enter / ASCII 13)	Device OUT and preset position C
fa_preset Carriage Return (Enter / ASCII 13)	Device UP and preset position “PRESET”

Future Automation recommends that the mechanism runs on a Dead Man (hold-to-run) system for user safety. The installer is responsible for carrying out the necessary risk assessments and end user training before proceeding without Dead Man functionality.

PLF-S-DRL

FLOOR LIFT - DROP AND ROLL

future automation

INTEGRATION CONSIDERATIONS

GENERAL MITIGATIONS:
- Implement hold and run (Dead man switch operation).
- Control methods should be located within direct line of sight of the mechanism.
- Implement password or key switch protected operation.

For more information on **Pit integration** follow link or scan the QR below https://fa.support/Files/PitGuidance

For more information on **Tape Switch integration** follow link or scan the QR below https://fa.support/Files/TapeSwitch

High Risk - Crushing Hazard
Crush hazard between the screen and the floor surface when the mechanism is closing.

Mitigation
See general mitigations.

High Risk - Crushing Hazard
Crush hazard between the base panel and the floor surface when the mechanism is opening.

Mitigation
A Tapeswitch can be installed underneath the floor to detect any obstructions.

Low Risk - Cable Snagging
Hazard Cables could be snagged if not properly managed through and around the mechanism, causing damage to the mechanism and electronics.

Mitigation
Ensure sufficient cable slack is allowed around movement joints to prevent stretching and/or damage to the cables and/or mechanism.

High Risk - Crushing Hazard
Crush hazard below the mechanism when the mechanism is closing.

Mitigation
Ensure the area below the mechanism is kept clear at all times during operation. If installing or maintaining the mechanism, do so with the mechanism turned off.

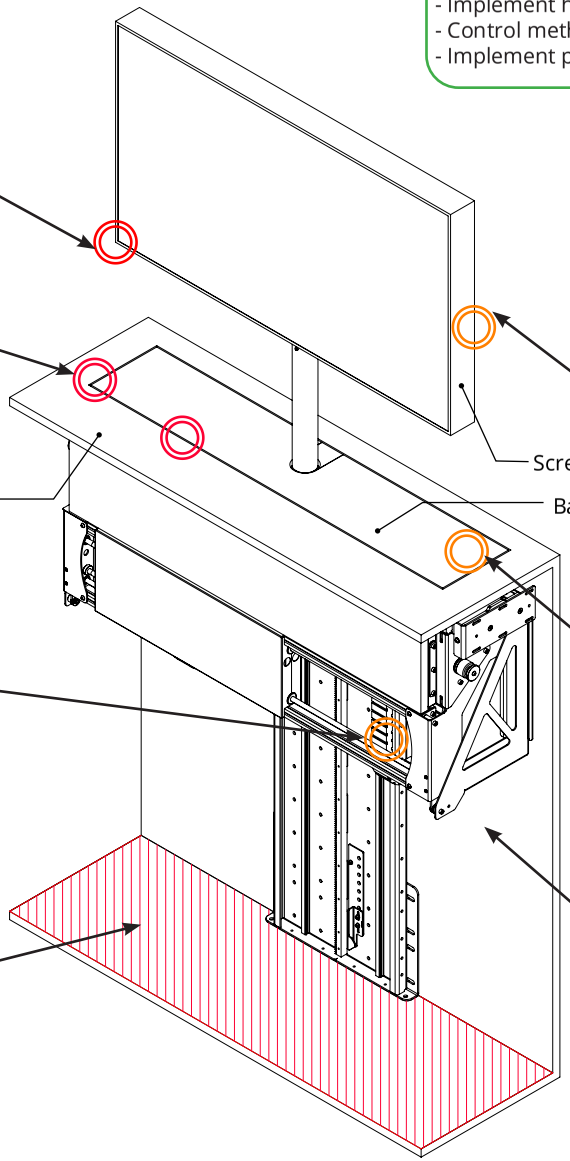

Low Risk - Impact Hazard
Impact hazard around the mechanism when it is swivelling.

Mitigation
Set swivel limits to prevent impact with surrounding objects. See also general mitigations.

Low Risk - Falling Objects Hazard
Falling object hazard if objects are left on top of the top panel.

Mitigation
See general mitigations.

Low Risk - Falling Hazard
Falling hazard when the mechanism is closing or opening. Fallen items may also cause damage to the mechanism during operation.

Mitigation
See general mitigations.

The installer is responsible for conducting a site-specific risk assessment. Due to the unique conditions of each installation, Future Automation cannot provide an exhaustive list of all potential risks. Installers must ensure that all risks associated with installation, operation, and maintenance are identified and mitigated in accordance with applicable legislation and best practice.
Further safety and servicing guidance is available at:
www.futureautomation.net/safety

NOTES

EUROPEAN OFFICE

Address:
Unit 6-8
Brunel Road
Bedford
Bedfordshire
MK41 9TG

Phone: +44 (0) 1438 833577
Email: info@futureautomation.co.uk

Office Hours:
Mon - Fri 8:00 to 17:30 GMT
Saturday & Sunday - Closed

NORTH AMERICAN OFFICE

Address:
Enterprise Park
127 Venture Drive
Dover
NH
03820

Phone: +1 (603) 742 9181
Email: info@futureautomation.net

Office Hours:
Mon - Fri 7:00 to 17:00 EST
Saturday & Sunday - Closed