PLF-6
FLOOR LIFT SYSTEM HEAVY

future automation

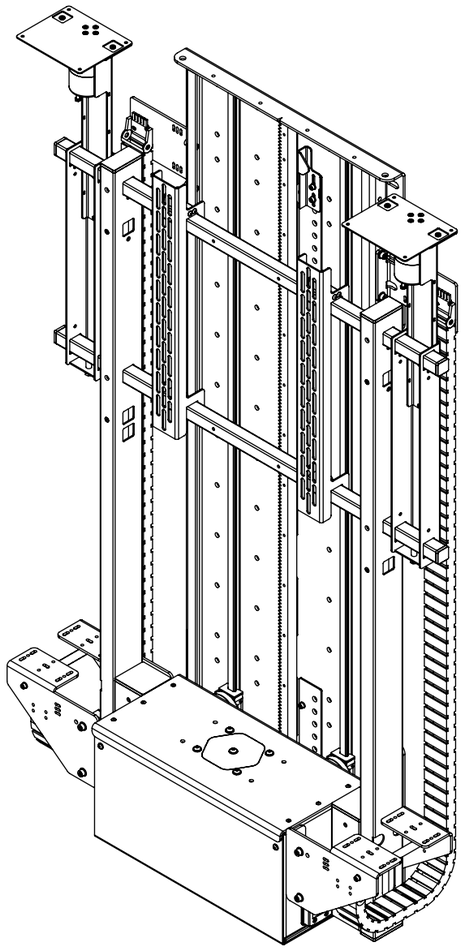

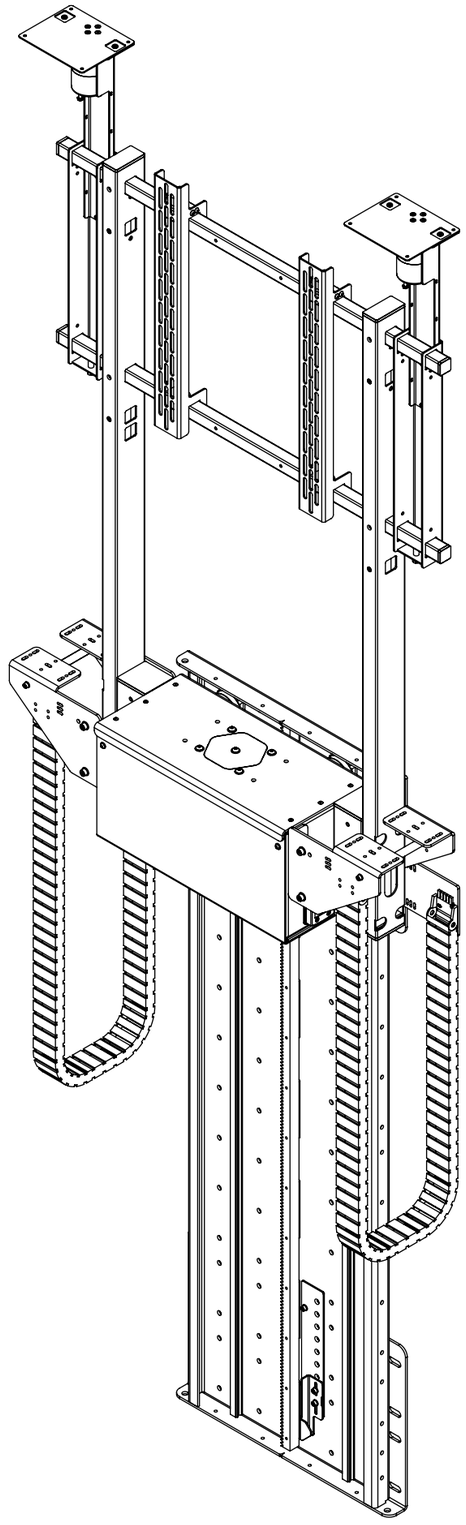

UK +44 (0) 1438 833577 **US** +1 (603) 742 9181
www.**FUTUREAUTOMATION**.NET

TECHNICAL SHEET
ISSUE 001
SHEET 1

PLF-6
FLOOR LIFT SYSTEM HEAVY

future automation

MODEL	DESCRIPTION	MIN SCREEN HEIGHT	MAX SCREEN HEIGHT
PLF-5	Vertical Floor Lift for 55" Screens	680 [26 3/4"]	800 [31 1/2"]
PLF-6	**Vertical Floor Lift for 65" Screens**	**800 [31 1/2"]**	**920 [36 1/4"]**
PLF-7	Vertical Floor Lift for 75" Screens	920 [36 1/4"]	1040 [40 15/16"]
PLF-8	Vertical Floor Lift for 85" Screens	1040 [40 15/16"]	1160 [45 11/16"]
PLF-9	Vertical Floor Lift for 98" Screens	1160 [45 11/16"]	1280 [50 3/8"]
PLF-10	Vertical Floor Lift for 105" Screens	1280 [50 3/8"]	1400 [55 1/8"]

ADDITIONAL MOTOR OPTIONS:

SERVO DRIVEN TECHNOLOGY

Z - SERVO MOTOR
Higher lifting capacity & faster operation.
See PLFZ Tech

ADDITIONAL FLAP OPTIONS:

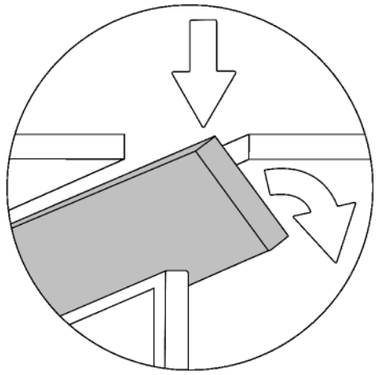

DRL - DROP & ROLL
See PLF-DRL Tech

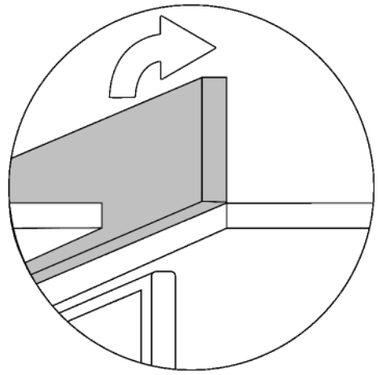

HF - HINGING FLAP
See PLF-HF Tech

ADDITIONAL MOVEMENT OPTIONS:

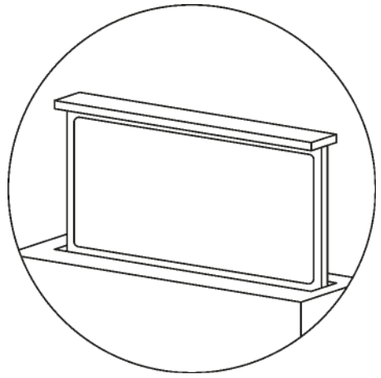

STANDARD
See LSH Tech

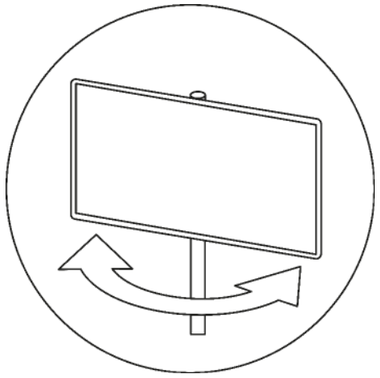

S - SWIVEL
See PLF-S Tech

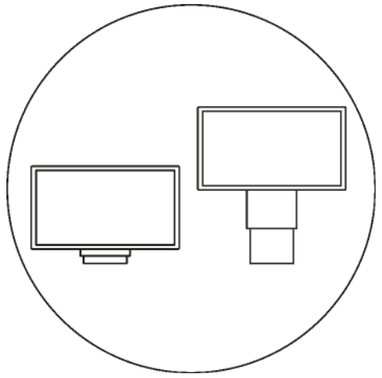

TU - TELESCOPE
See PLF-TU Tech

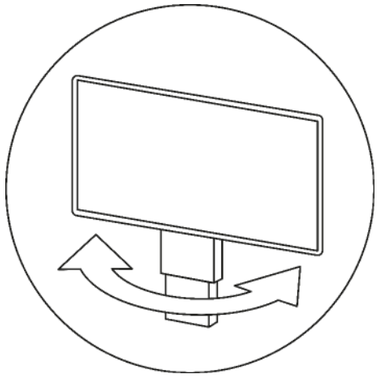

S-TU - SWIVEL & TELESCOPE
See PLF-S-TU Tech

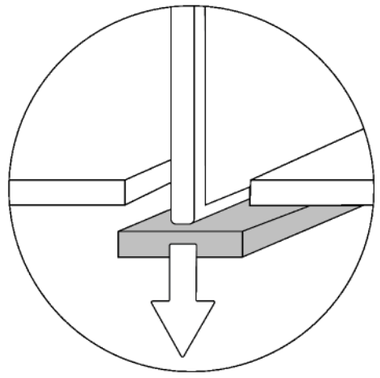

I - INVERTED
See I-LSH Tech

UK +44 (0) 1438 833577 **US** +1 (603) 742 9181
www.**FUTUREAUTOMATION**.NET

PLF-6
FLOOR LIFT SYSTEM HEAVY

future automation

SPECIFICATION	MEASUREMENTS
Maximum Screen Height	920mm [36 1/4"]
Minimum Screen Height	800mm [31 1/2"]
Maximum Lifting Capacity	100Kg [220lbs] (Higher lifting capacity option available, see PLFZ-6)
Internal Pit Height	1770mm [69 11/16"]
Packaging Dimensions	TBC
Shipping Weight	TBC
Movement Type	Motorised
Speed	TBC
Power Supply Required	110V - 240V AC
Power Consumption	250 - 500W
Power Consumption Standby	3W
Mounting Patterns Supported	VESA 600, 400, 300 W x 600, 400, 300 H
Vertical Mounting Patterns Positioning	Mount holes in the bottom 115mm [4 1/2"] of the screen require a VOA Adaptor
Control Options	IR Remote, RS232, Contact Closure, RF Available
Colour Options	Custom RAL paint finishes
Package Contents	Mechanism, IR remote control
Marine Suitable	Yes
Outdoor Suitable	No (Marine Outdoor Option Available, see PLF-6-MO)

PLF-6
FLOOR LIFT SYSTEM HEAVY

future automation

GENERAL DIMENSIONS

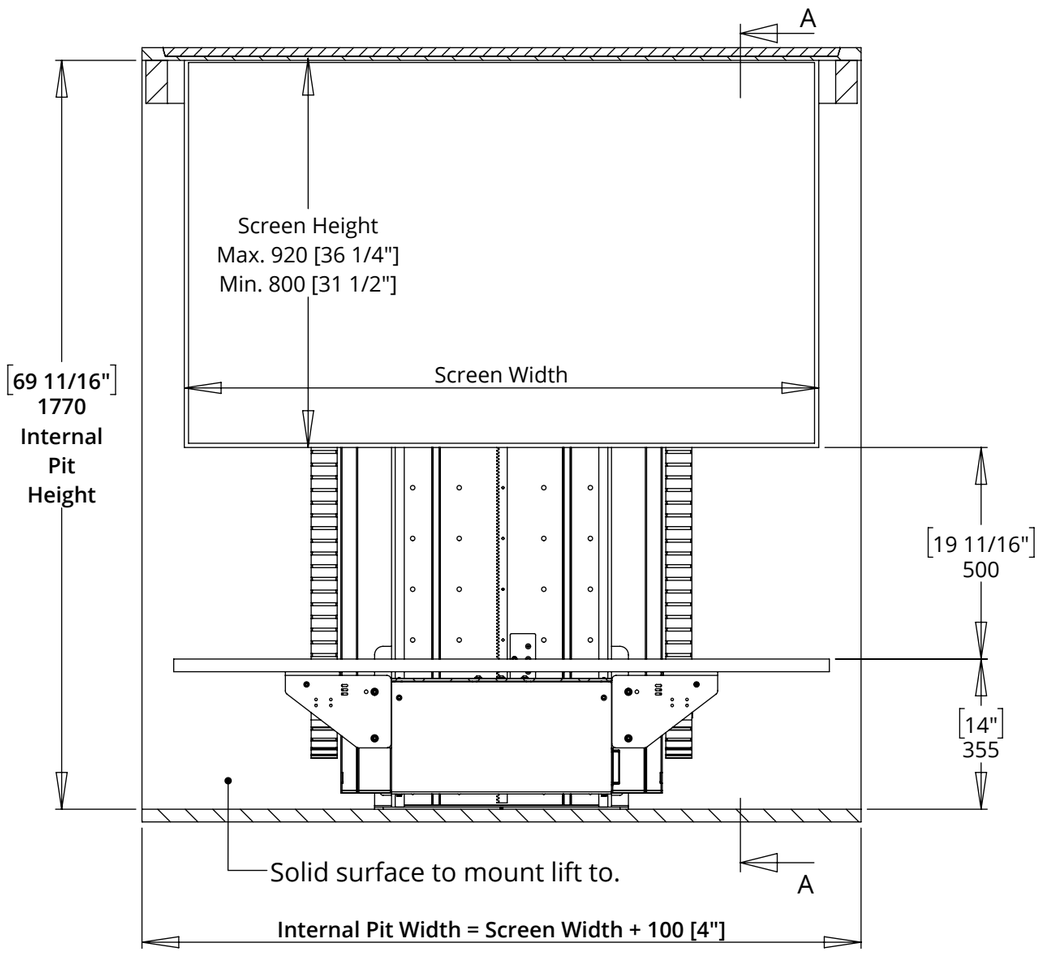

Note:
For screen depths greater than 100mm [3 15/16"], the depths of the pit, base and top panel must be increased.

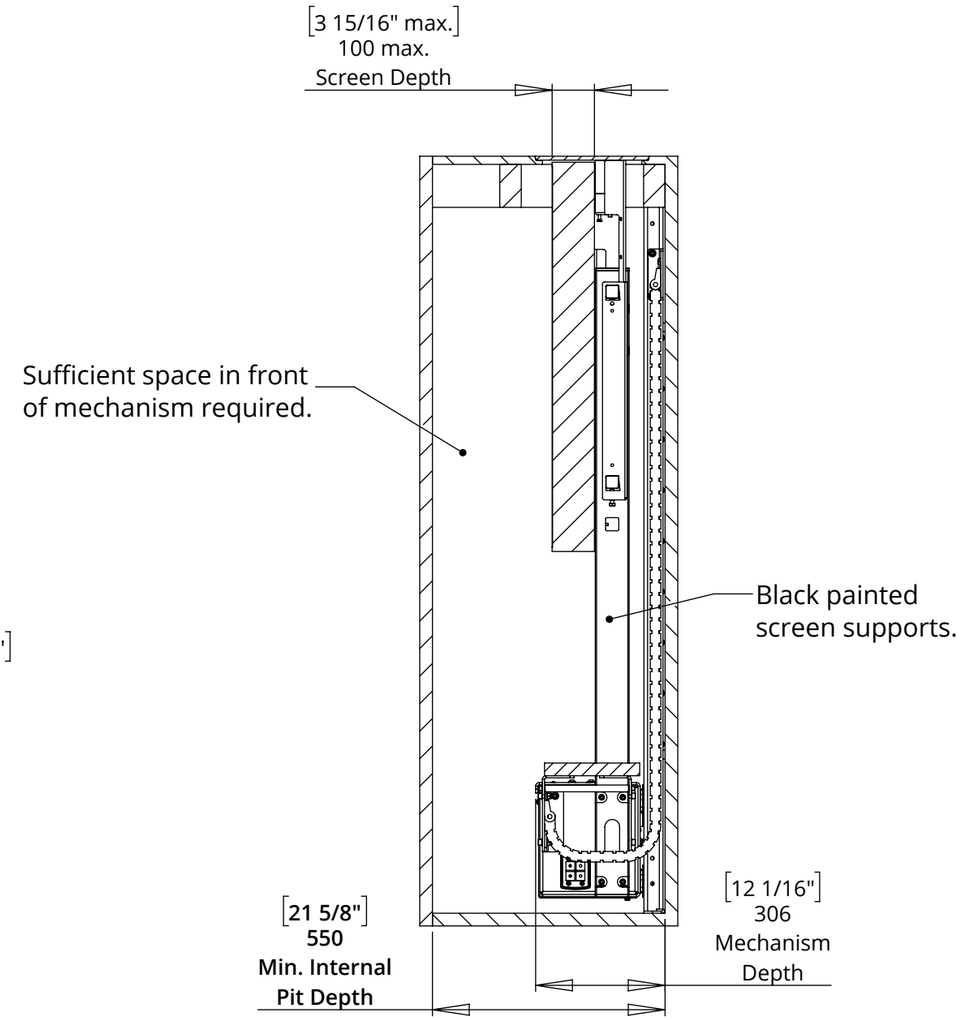

SECTION A-A
MECH DOWN

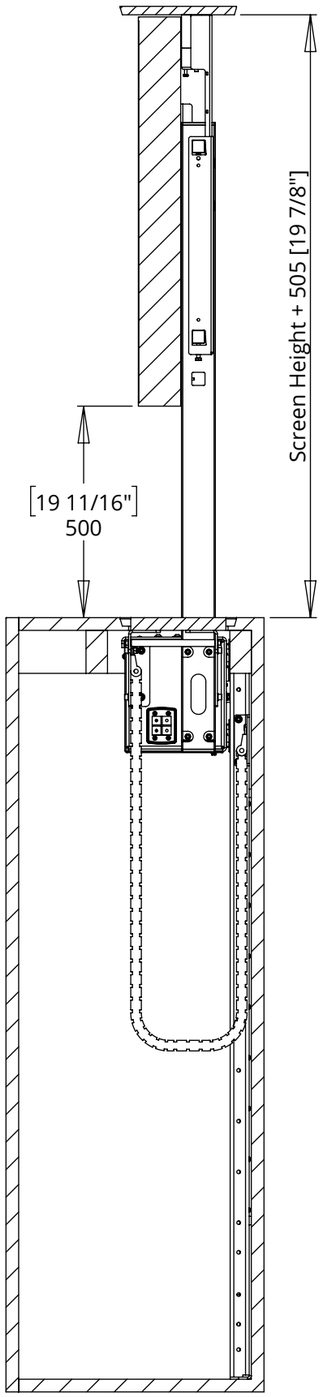

SECTION A-A
MECH UP

UK +44 (0) 1438 833577 **US** +1 (603) 742 9181
www.**FUTUREAUTOMATION**.NET

TECHNICAL SHEET
ISSUE 001
SHEET 4

PLF-6
FLOOR LIFT SYSTEM HEAVY

future automation

IN GROUND PIT - CONSTRUCTION DETAILS & CONSIDERATIONS
GENERAL CONSTRUCTION

Below is an example of how a subterranean pit for a lift mechanism should be constructed.

The main points that need to be considered are as follows:

- **Access to Mechanism for Installation and Servicing**
  The pit should have sufficient access to help with future installation and servicing. An example of an access hatch and a floor insert is shown below. The method of access will depend on the particular site scenario.

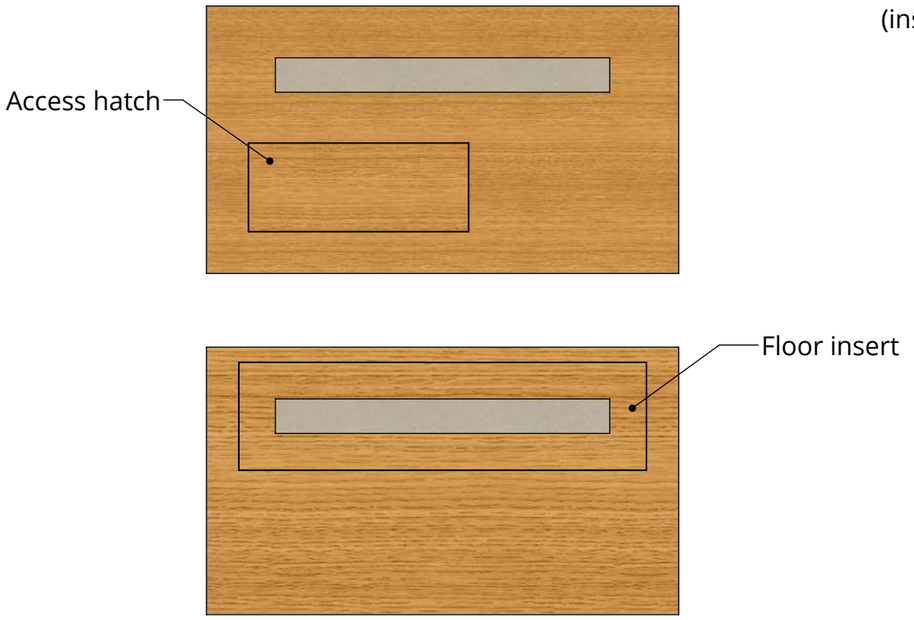

- **Humidity Control**
  A method of dehumidification should be implemented into the pit to reduce the build up of condensation.

Note: Scan the QR code for further details on pit construction.

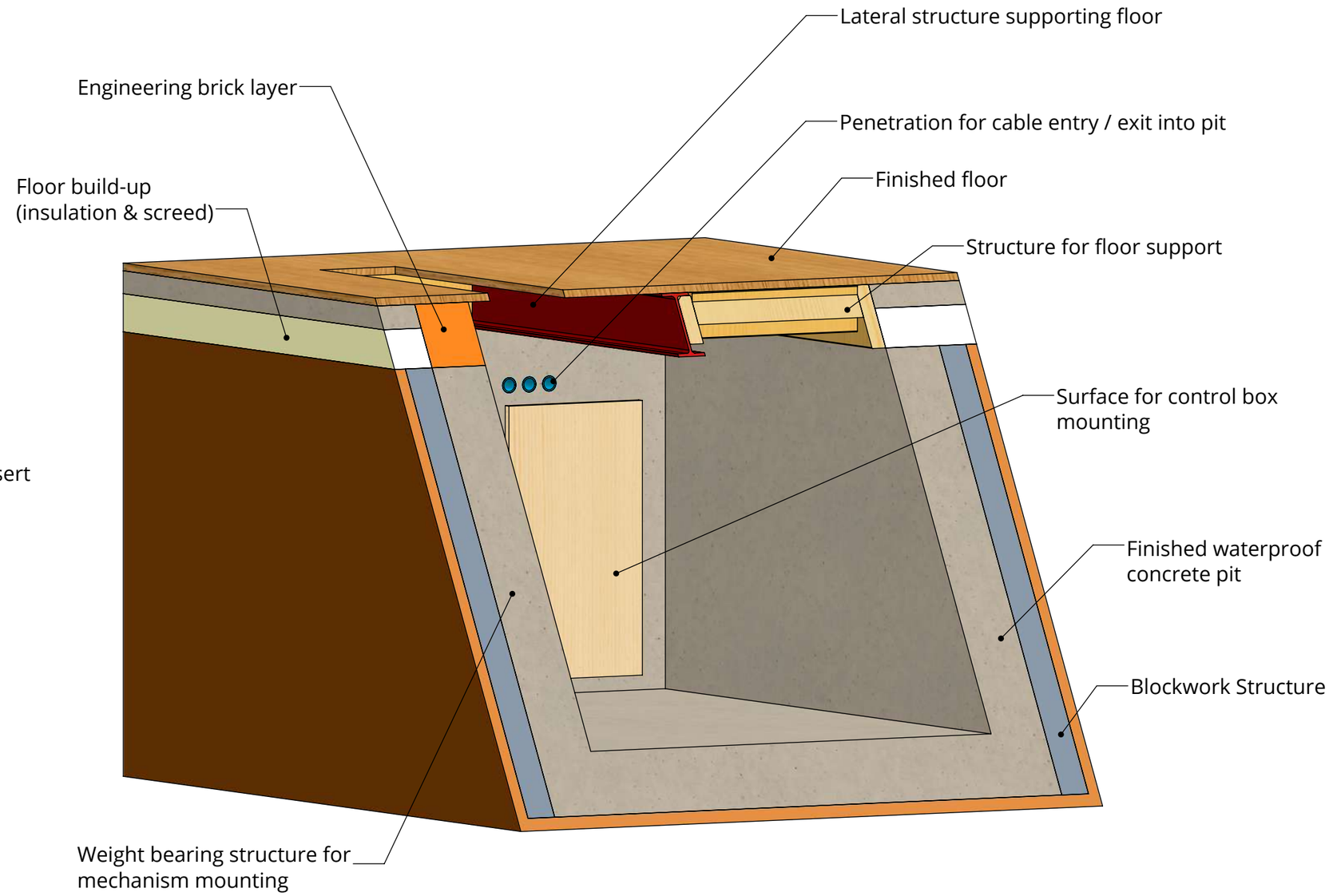

UK +44 (0) 1438 833577 **US** +1 (603) 742 9181
www.**FUTUREAUTOMATION**.NET

PLF-6
FLOOR LIFT SYSTEM HEAVY

future automation

APERTURE DIMENSIONS AND FLOOR DETAILS

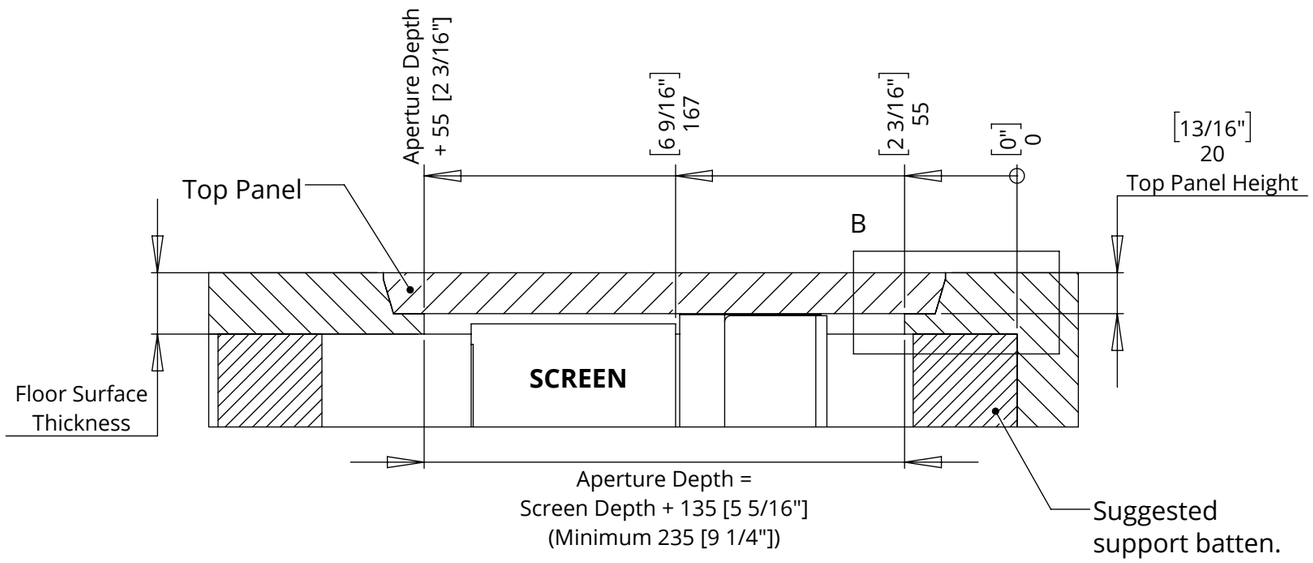

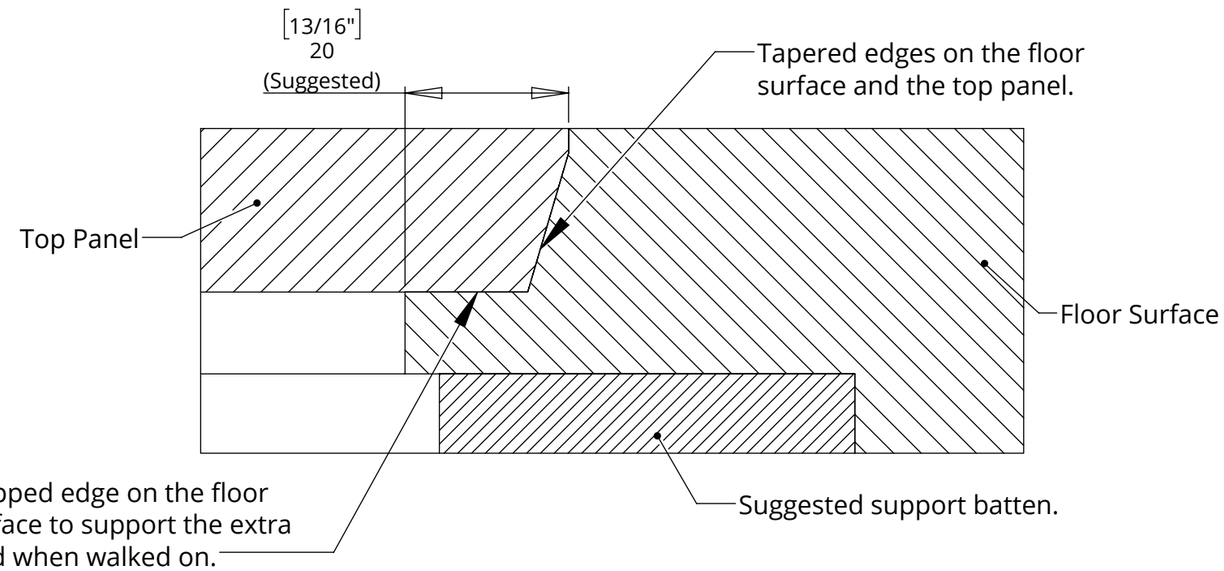

DETAIL B

A suggested top panel and floor surface construction based upon the dimensions shown on sheet 7.

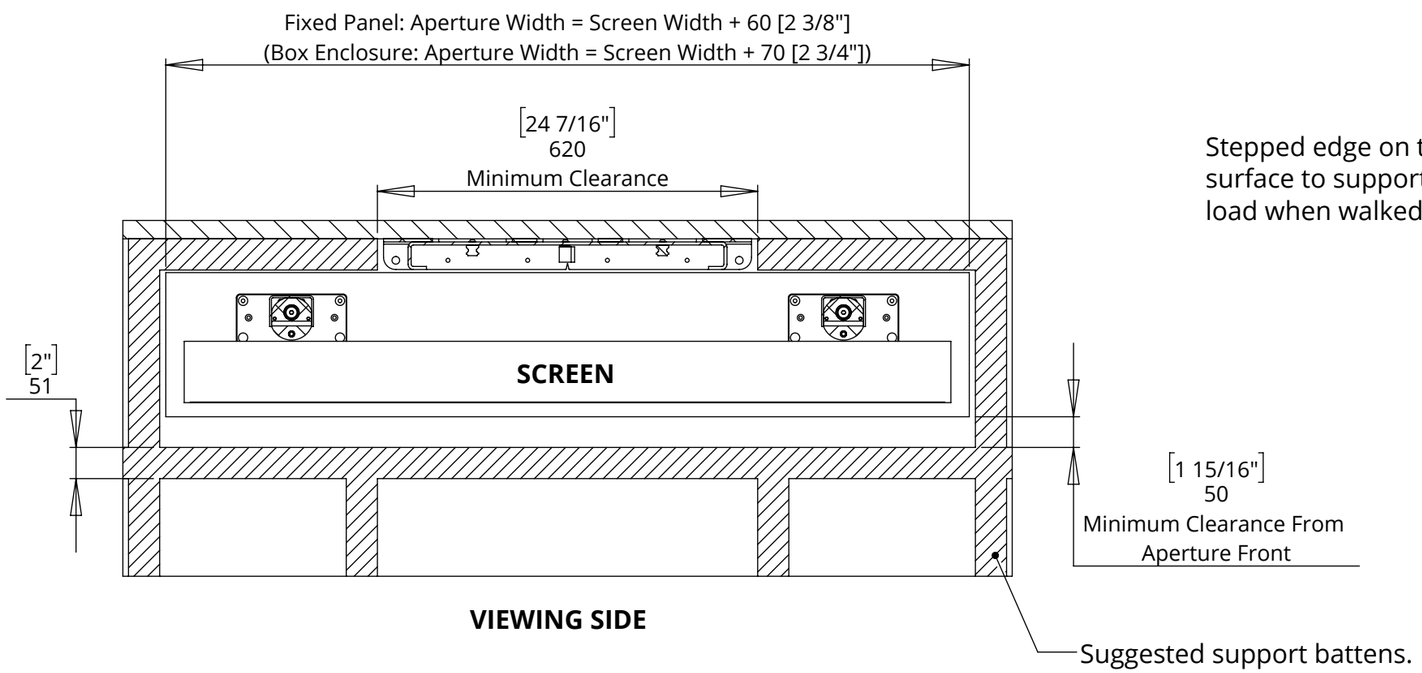

UK +44 (0) 1438 833577 **US** +1 (603) 742 9181
www.**FUTUREAUTOMATION**.NET

TECHNICAL SHEET
ISSUE 001
SHEET 6

PLF-6
FLOOR LIFT SYSTEM HEAVY

future automation

FIXED PANEL - BASE PANEL AND TOP PANEL DETAILS

BASE PANEL

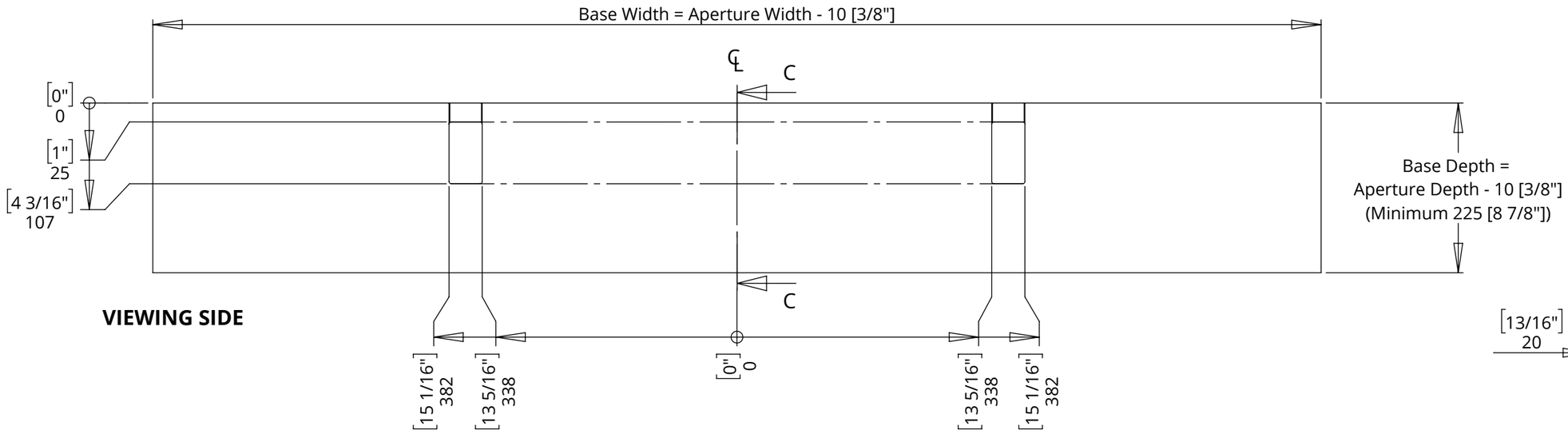

Base thickness to be equal to or larger than the floor surface thickness.

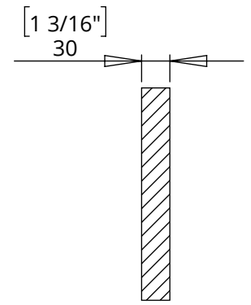

SECTION C-C

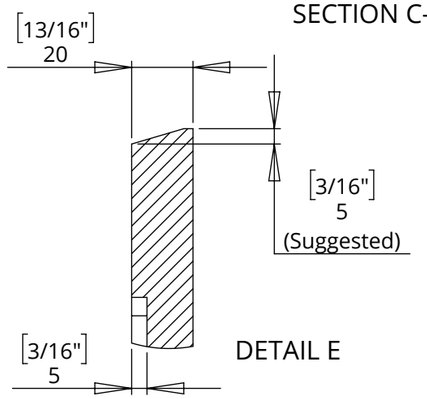

DETAIL E

TOP PANEL

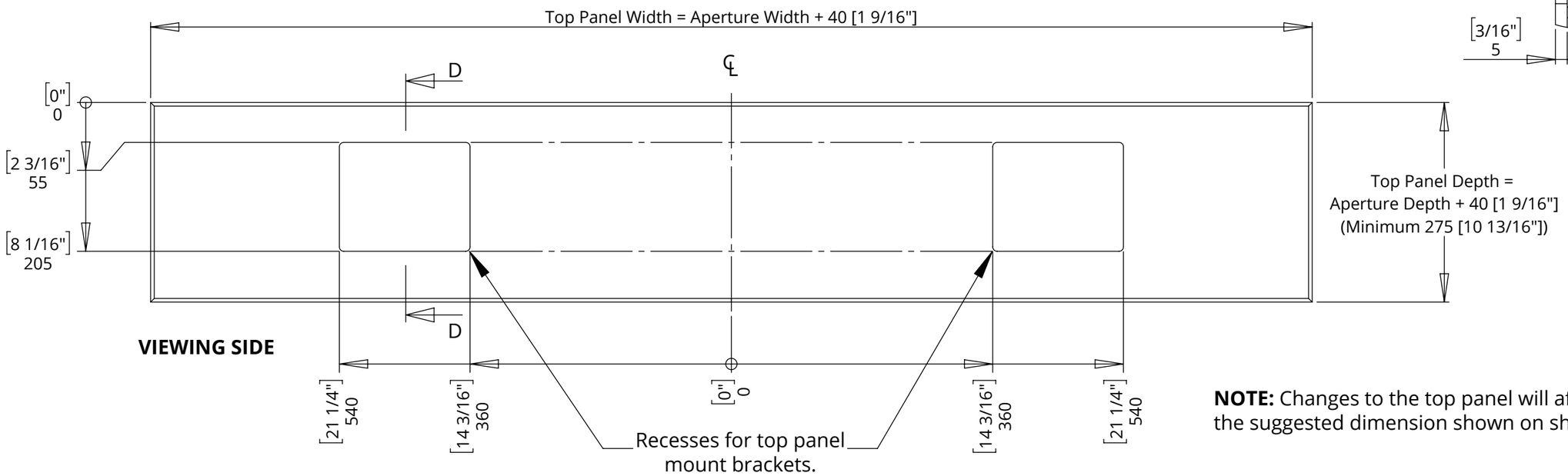

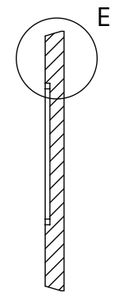

SECTION D-D

NOTE: Changes to the top panel will affect the suggested dimension shown on sheet 6.

PLF-6
FLOOR LIFT SYSTEM HEAVY

future automation

FIXED PANEL - INTEGRATION CONSIDERATIONS

General Mitigations:
- Activate hold-to-run/dead-man switch operation.
- Locate controls within direct line of sight of the mechanism.
- Implement password or key switch protected operation.

High Risk - Crushing Hazard
Crush hazard between the top panel and the floor surface as the lift closes.

Mitigation
The top panel is constructed to allow vertical movement in the presence of an obstruction, causing the mechanism to return to open again.

High Risk - Crushing Hazard
Crush hazard between the screen and the floor surface when the mechanism is closing.

Mitigation
See general mitigations.

High Risk - Crushing Hazard
Crush hazard between the base panel and the floor surface when the mechanism is opening.

Mitigation
A Tapeswitch can be installed underneath the base panel to detect any obstructions. Scan the QR code and navigate to the Cabinet Safety document for further details.

High Risk - Crushing Hazard
Crush hazard below the mechanism when the mechanism is closing.

Mitigation
Ensure the area below the mechanism is kept clear at all times during operation. If installing or maintaining the mechanism, do so with the mechanism turned off.

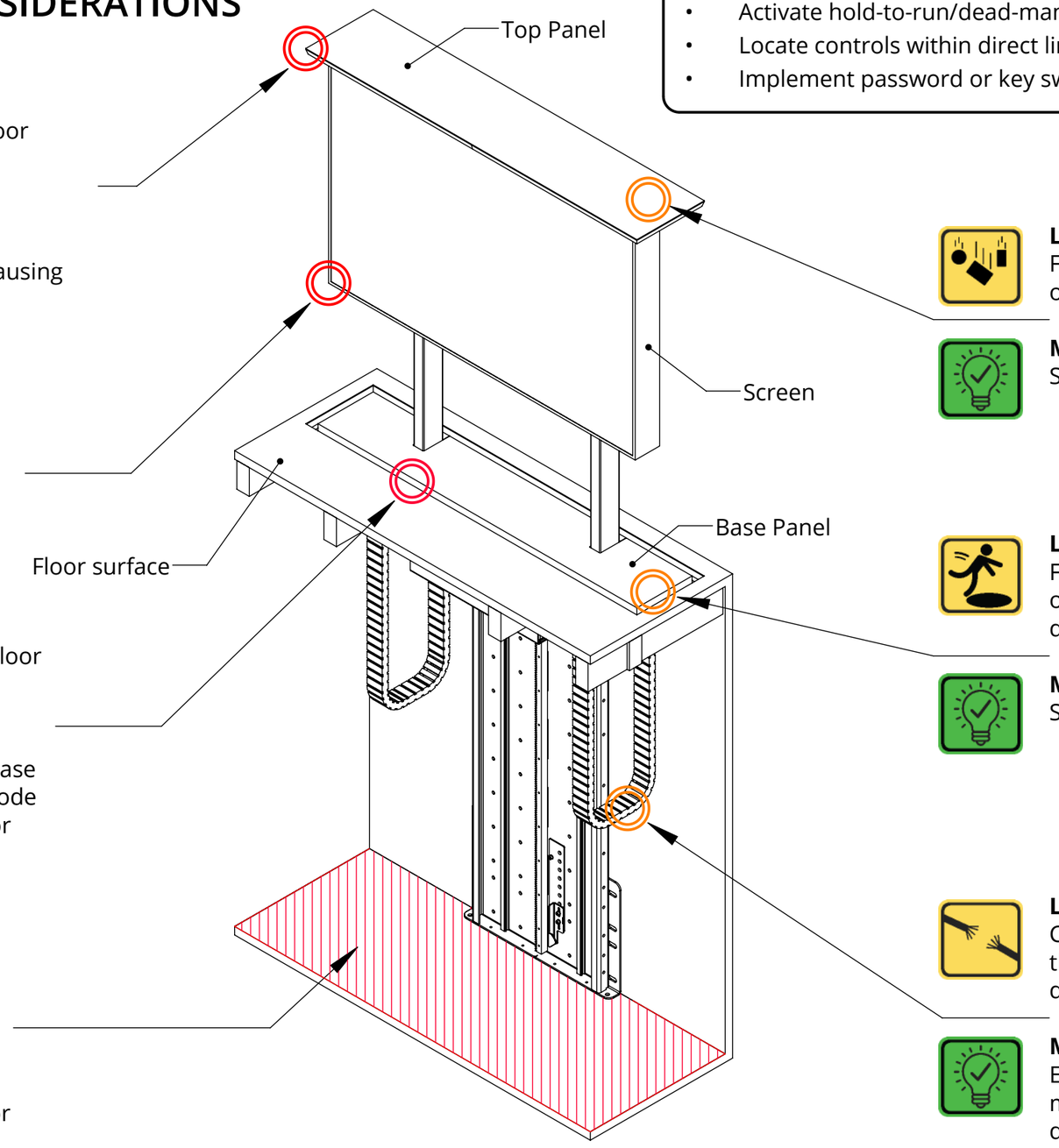

Low Risk - Falling Objects Hazard
Falling object hazard if objects are left on top of the top panel.

Mitigation
See general mitigations.

Low Risk - Falling Hazard
Falling hazard when the mechanism is closing or opening. Fallen items may also cause damage to the mechanism during operation.

Mitigation
See general mitigations.

Low Risk - Cable Snagging Hazard
Cables could be snagged if not properly managed through and around the mechanism, causing damage to the mechanism and electronics.

Mitigation
Ensure sufficient cable slack is allowed around movement joints to prevent stretching and/or damage to the cables and/or mechanism.

The installer is responsible for conducting a site-specific risk assessment. Due to the unique conditions of each installation, Future Automation cannot provide an exhaustive list of all potential risks.
Installers must ensure that all risks associated with installation, operation, and maintenance are identified and mitigated in accordance with applicable legislation and best practice.
Further safety and servicing guidance is available at:
www.futureautomation.net/safety

UK +44 (0) 1438 833577 **US** +1 (603) 742 9181
www.**FUTUREAUTOMATION**.NET

PLF-6
FLOOR LIFT SYSTEM HEAVY

future automation

BOX ENCLOSURE DETAILS

For size specific box enclosures with further details, please see CAD.

Maximum lifting capacity: 100kg [225lbs]

SERVO DRIVEN TECHNOLOGY

Z - SERVO MOTOR
Higher lifting capacity & faster operation.
See PLFZ Tech

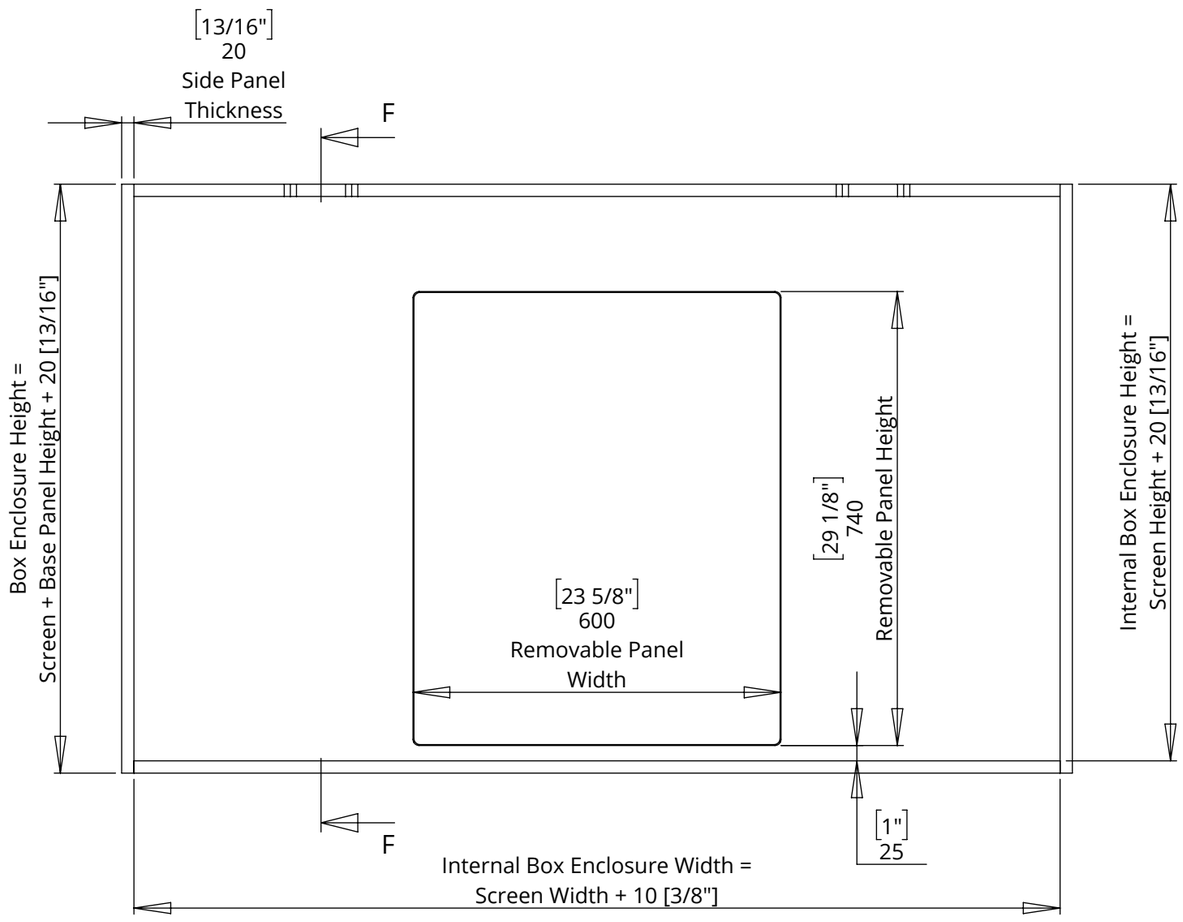

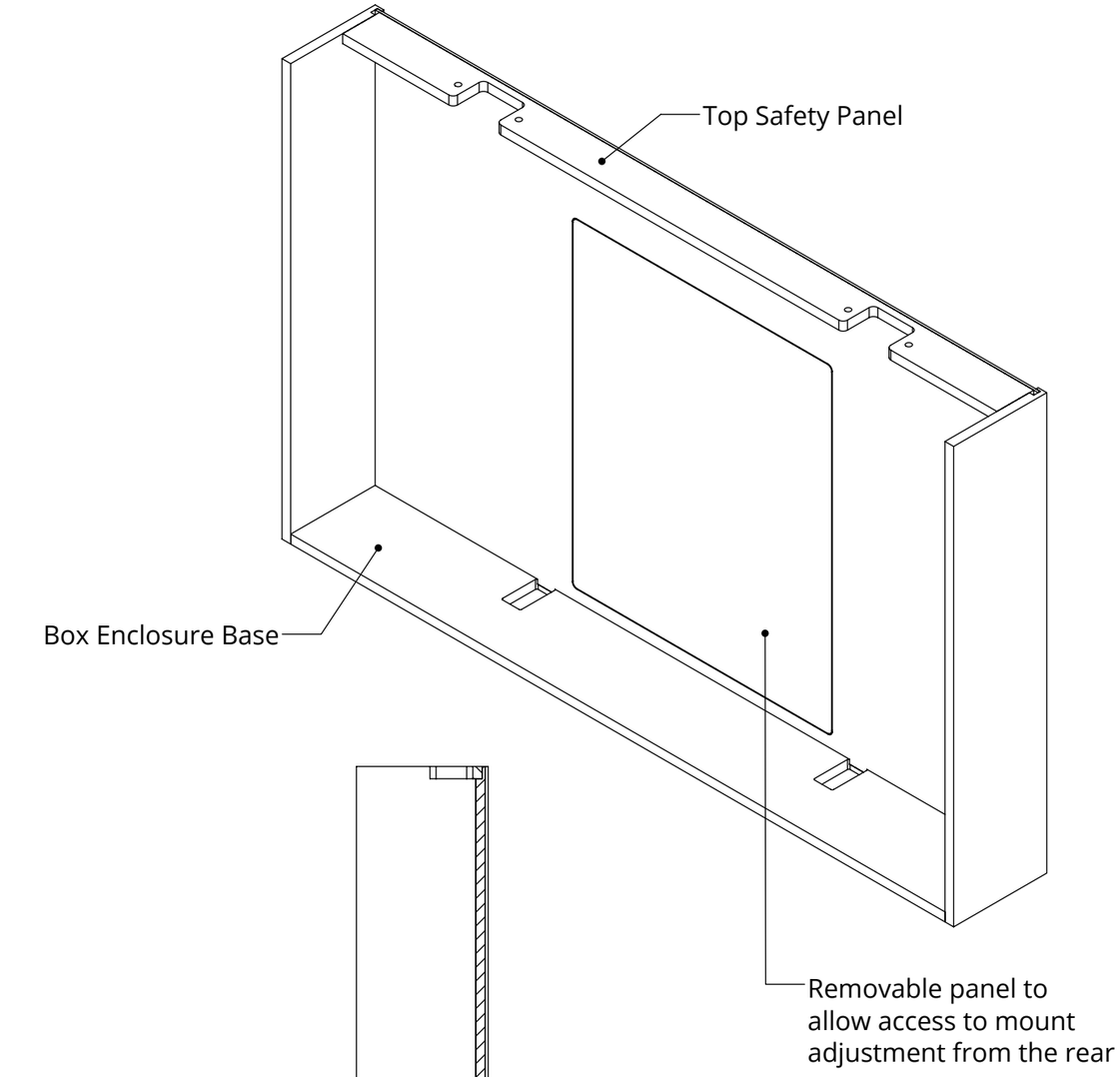

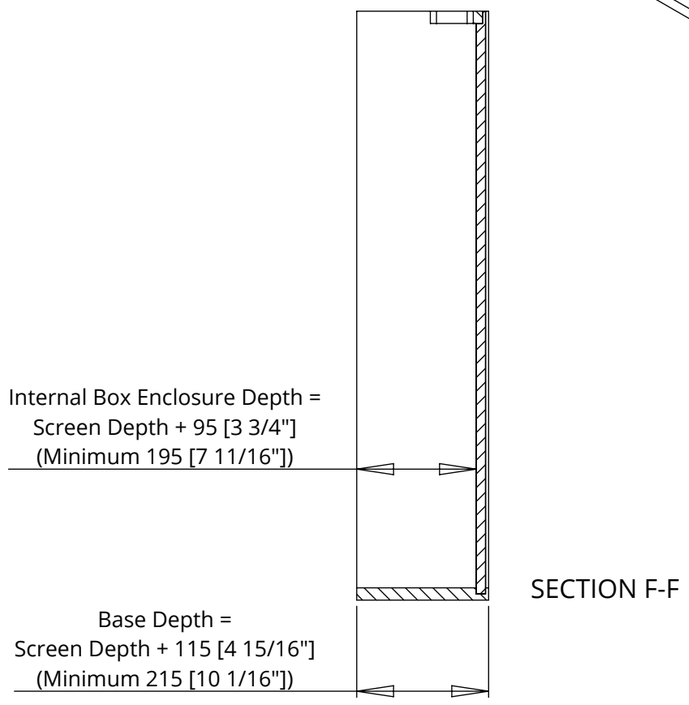

SECTION F-F

UK +44 (0) 1438 833577 **US** +1 (603) 742 9181
www.**FUTUREAUTOMATION**.NET

TECHNICAL SHEET
ISSUE 001
SHEET 9

PLF-6
FLOOR LIFT SYSTEM HEAVY

future automation

BOX ENCLOSURE - BOX ENCLOSURE BASE AND TOP SAFETY PANEL DETAILS

TOP PANEL

For top panel dimensions, please see sheet 7.

BOX ENCLOSURE BASE

Base thickness to be equal to or larger than the floor surface thickness.

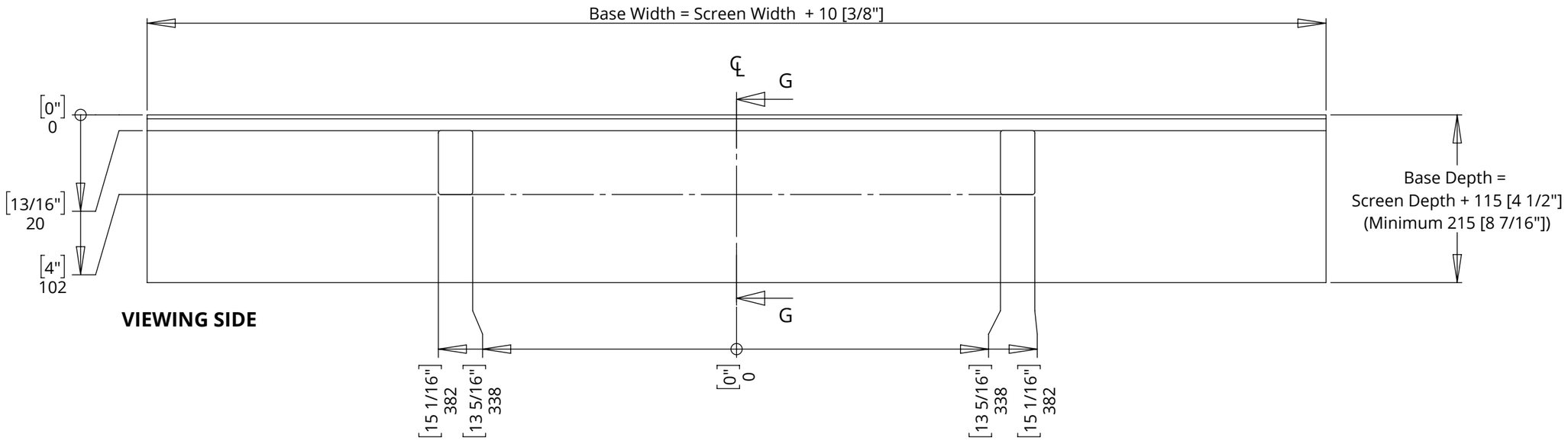

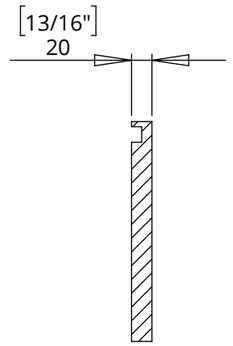

SECTION G-G

TOP SAFETY PANEL

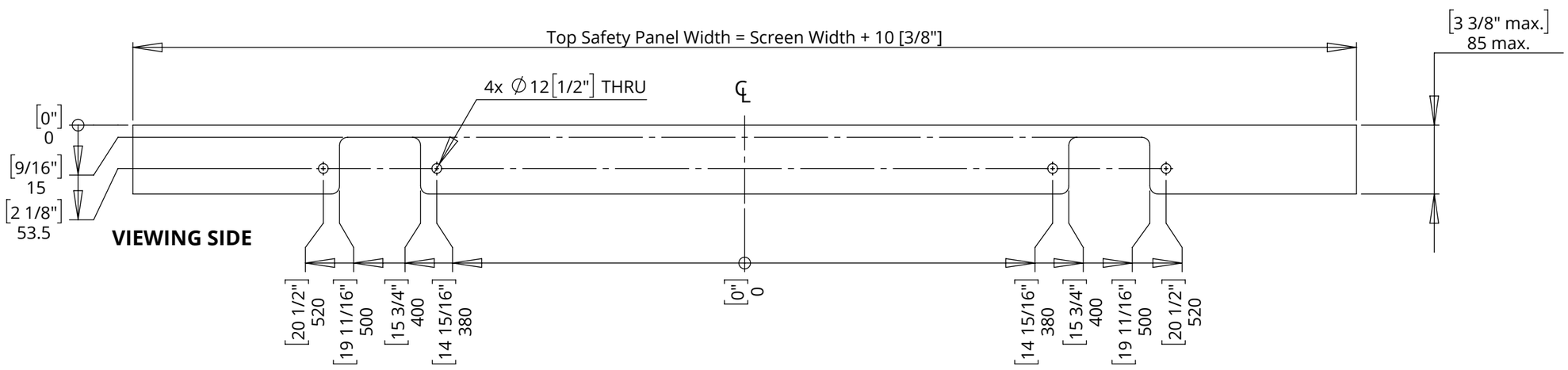

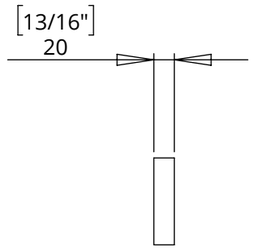

PLF-6
FLOOR LIFT SYSTEM HEAVY

future automation

BOX ENCLOSURE - INTEGRATION CONSIDERATIONS

General Mitigations:
- Activate hold-to-run/dead-man switch operation.
- Locate controls within direct line of sight of the mechanism.
- Implement password or key switch protected operation.

High Risk - Crushing Hazard
Crush hazard between the top panel and the floor surface as the mechanism closes.

Mitigation
The top panel is constructed to allow vertical movement in the presence of an obstruction, causing the mechanism to return to open again.

High Risk - Crushing Hazard
Crush hazard between the floor surface and the box enclosure when the mechanism is closing.

Mitigation
See general mitigations.

High Risk - Crushing Hazard
Crush hazard between the base panel and the floor surface when the mechanism is opening.

Mitigation
A Tapeswitch can be installed underneath the base panel to detect any obstructions. Scan the QR code and navigate to the Cabinet Safety document for further details.

High Risk - Crushing Hazard
Crush hazard below the mechanism when the mechanism is closing.

Mitigation
Ensure the area below the mechanism is kept clear at all times during operation. If installing or maintaining the mechanism, do so with the mechanism turned off.

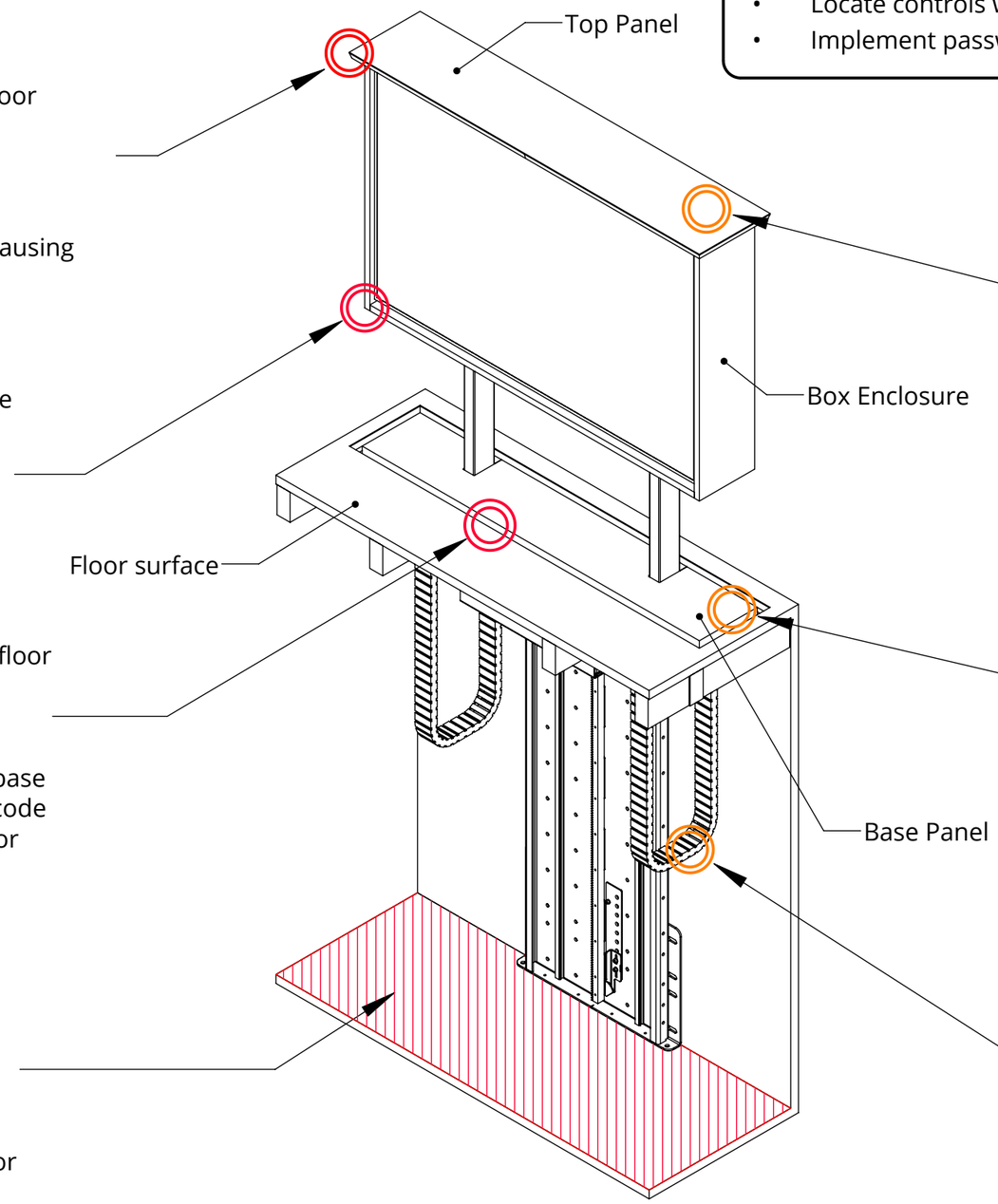

Low Risk - Falling Objects Hazard
Falling object hazard if objects are left on top of the top panel.

Mitigation
See general mitigations.

Low Risk - Falling Hazard
Falling hazard when the mechanism is closing. Fallen items may also cause damage to the mechanism during operation.

Mitigation
See general mitigations.

Low Risk - Cable Snagging Hazard
Cables could be snagged if not properly managed through and around the mechanism, causing damage to the mechanism and electronics.

Mitigation
Ensure sufficient cable slack is allowed around movement joints to prevent stretching and/or damage to the cables and/or mechanism.

The installer is responsible for conducting a site-specific risk assessment. Due to the unique conditions of each installation, Future Automation cannot provide an exhaustive list of all potential risks.
Installers must ensure that all risks associated with installation, operation, and maintenance are identified and mitigated in accordance with applicable legislation and best practice.
Further safety and servicing guidance is available at:
www.futureautomation.net/safety

UK +44 (0) 1438 833577 **US** +1 (603) 742 9181
www.**FUTUREAUTOMATION**.NET

PLF-6
FLOOR LIFT SYSTEM HEAVY

future automation

CABLE ROUTING

Screen cables should be routed through the cable management chain, through the centre of the box section mount, and then to the screen.

Mechanism cables should be routed to the control box, which should be stored in a safe and accessible location.

MECHANISM CABLES

MAINS POWER

SCREEN CABLES

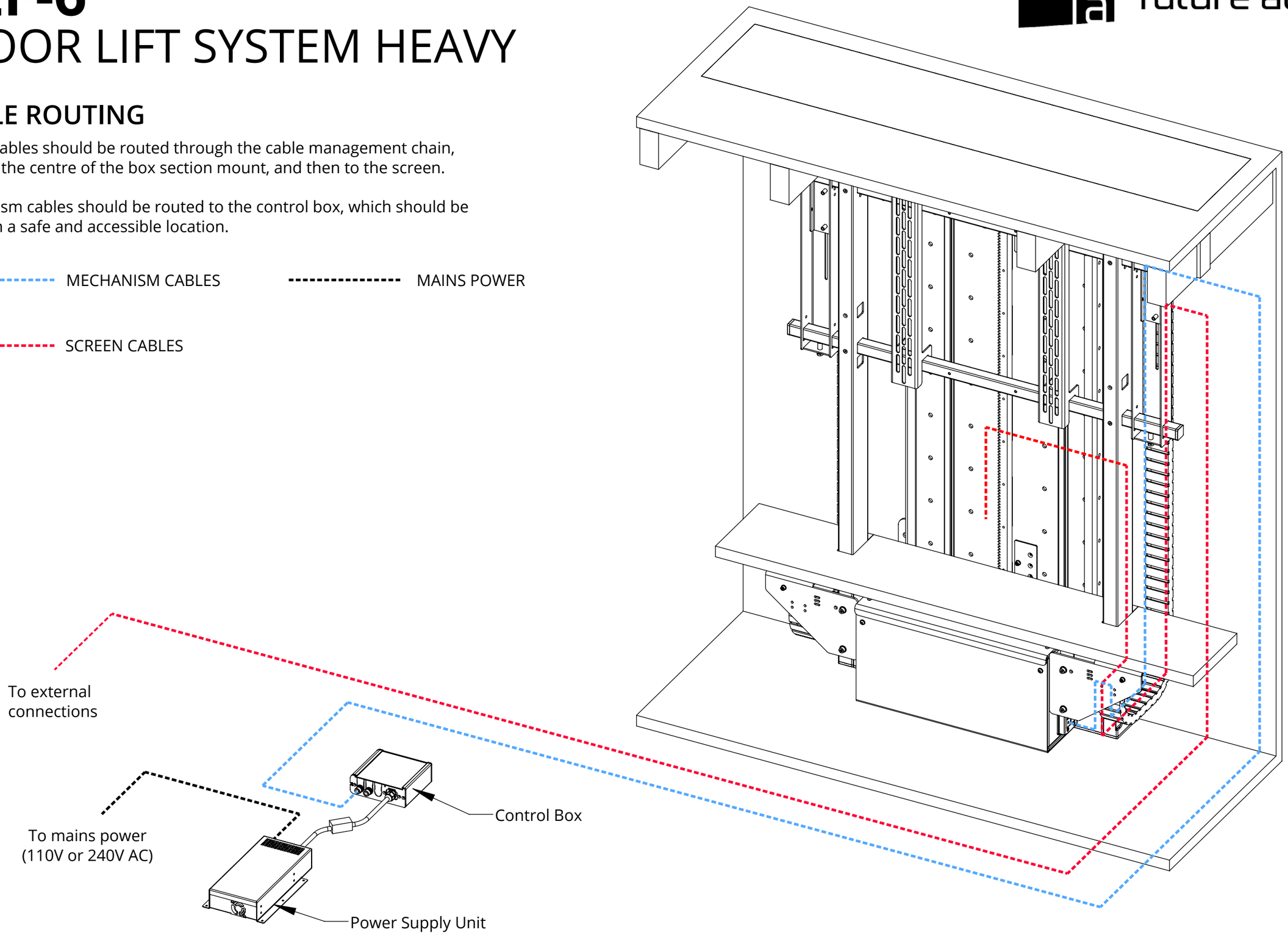

UK +44 (0) 1438 833577 **US** +1 (603) 742 9181
www.**FUTUREAUTOMATION**.NET

TECHNICAL SHEET
ISSUE 001
SHEET 12

PLF-6
FLOOR LIFT SYSTEM HEAVY

future automation

CONTROL BOX DETAILS

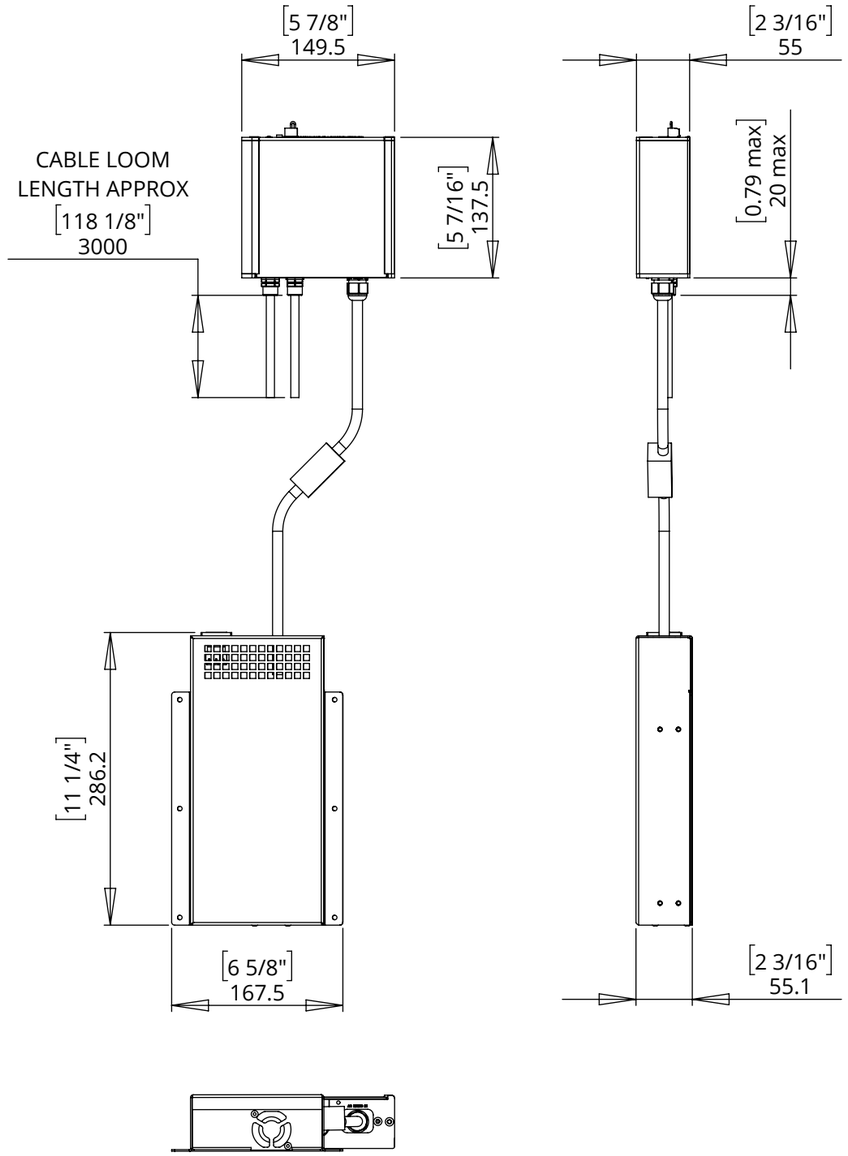

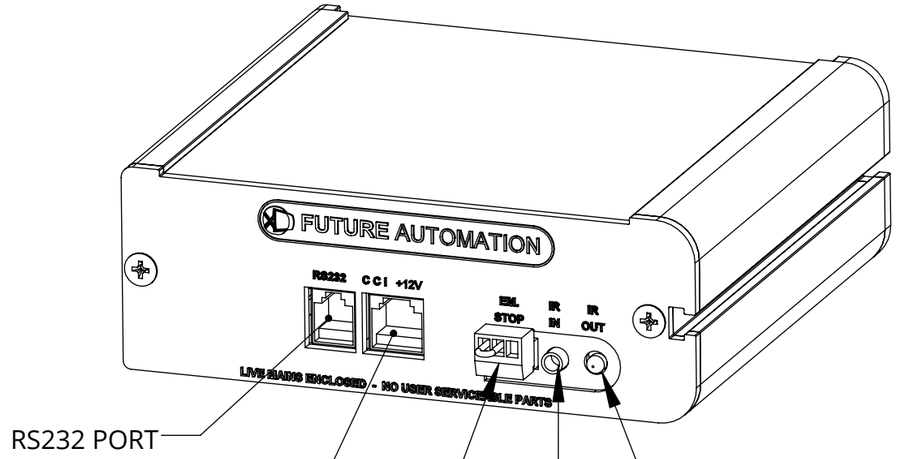

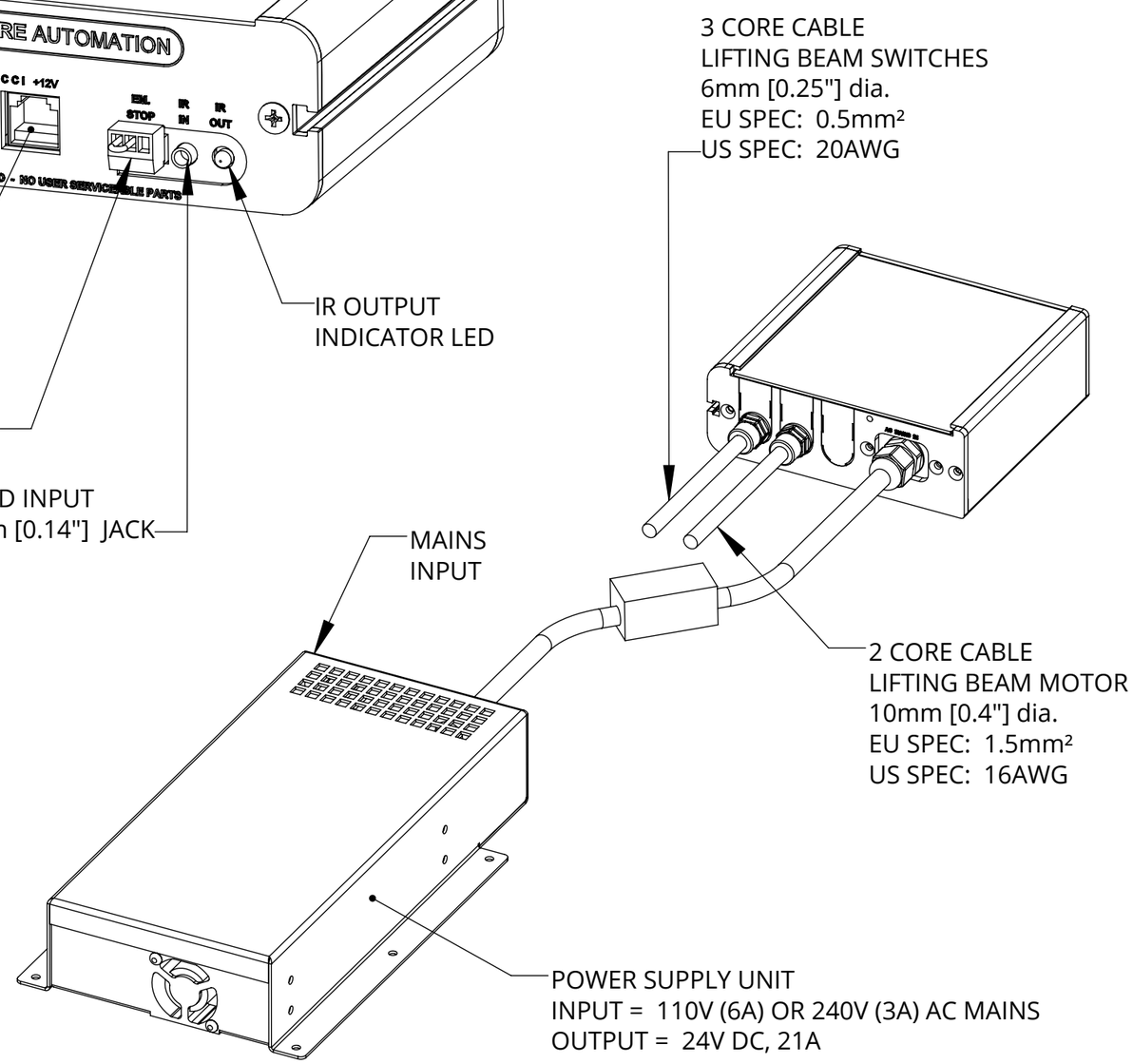

NOTES

- POWER SUPPLY UNIT (PSU) WILL ALLOW 110V OR 240V AC INPUT. THE SAME PSU IS USED FOR EU OR US MAINS SUPPLIES.
- OTHER THAN CONTROL CABLES, ALL CABLES TERMINATE AT CONTROL BOARD VIA STANDARD PHOENIX CONNECTORS.
- CABLE LOOM LENGTH SUPPLIED AT APPROX. 3m [118"]. LOOM CAN BE EXTENDED UP TO MAXIMUM OF APPROX. 10m [400"].
- MINIMUM CABLE BEND RADIUS 25mm [1"].

UK +44 (0) 1438 833577 **US** +1 (603) 742 9181
www.**FUTUREAUTOMATION**.NET

TECHNICAL SHEET
ISSUE 001
SHEET 13