SPS-VS-6 - QA2

SLIDING PANEL MECHANISM - VERTICAL SPLIT

future automation

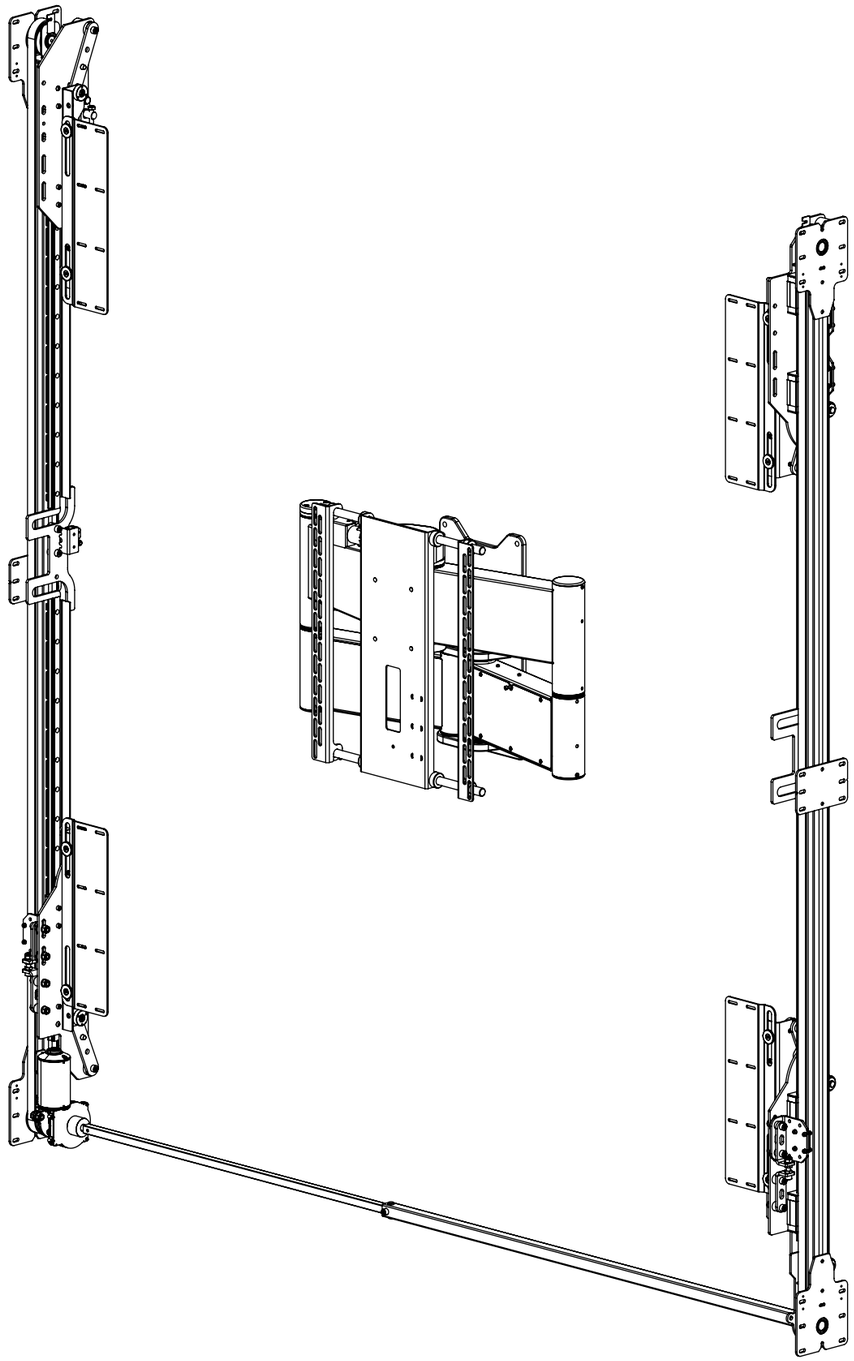

UK +44 (0) 1438 833577 **US** +1 (603) 742 9181
www.**FUTUREAUTOMATION**.NET

TECHNICAL SHEET
ISSUE 001
SHEET 1

SPS-VS-6 - QA2

SLIDING PANEL MECHANISM - VERTICAL SPLIT

future automation

MODEL	DESCRIPTION	MIN SCREEN HEIGHT	MAX SCREEN HEIGHT
SPS-V-5	Vertical - Single Panel	700 [27 9/16"]	800 [31 1/2"]
SPS-V-6	Vertical - Single Panel	801 [31 9/16"]	950 [37 3/8"]
SPS-V-7	Vertical - Single Panel	951 [37 7/16"]	1100[43 5/16"]
SPS-V-8	Vertical - Single Panel	1101[43 3/8"]	1250[49 3/16"]
SPS-VS-5	Vertical - Double Splitting Panel	700 [27 9/16"]	800 [31 1/2"]
SPS-VS-6	**Vertical - Double Splitting Panel**	**801 [31 9/16"]**	**950 [37 3/8"]**
SPS-VS-7	Vertical - Double Splitting Panel	951 [37 7/16"]	1100[43 5/16"]
SPS-VS-8	Vertical - Double Splitting Panel	1101[43 3/8"]	1250[49 3/16"]

MODEL	DESCRIPTION	MIN SCREEN WIDTH	MAX SCREEN WIDTH
SPS-HZ-6	Horizontal - Single Panel	1400 [55 1/8"]	1600 [63"]
SPS-HZ-7	Horizontal - Single Panel	1601 [63 1/16"]	1850 [72 13/16"]
SPS-HZ-8	Horizontal - Single Panel	1851 [72 7/8"]	2100 [82 11/16"]
SPS-HZS-6	Horizontal - Double Splitting Panel	1400 [55 1/8"]	1600 [63"]
SPS-HZS-7	Horizontal - Double Splitting Panel	1601 [63 1/16"]	1850 [72 13/16"]
SPS-HZS-8	Horizontal - Double Splitting Panel	1851 [72 7/8"]	2100 [82 11/16"]

SPS-V - VERTICAL - SINGLE PANEL

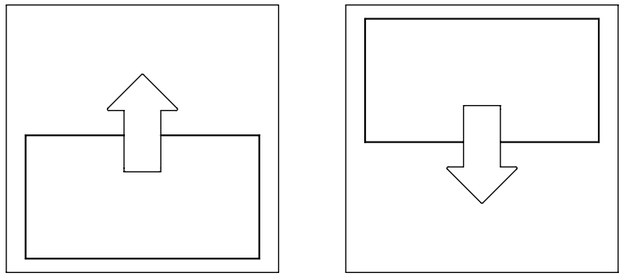

SPS-VS - VERTICAL SPLIT - DOUBLE PANEL

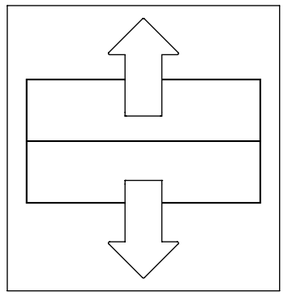

SPS-HZ - HORIZONTAL - SINGLE PANEL

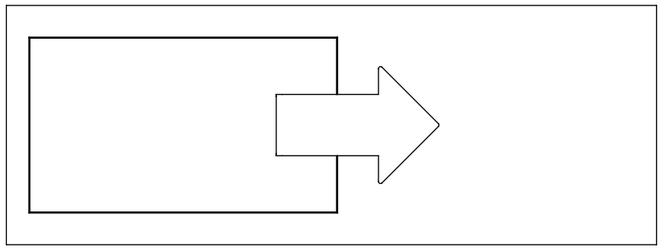

SPS-HZS - HORIZONTAL SPLIT- DOUBLE PANEL

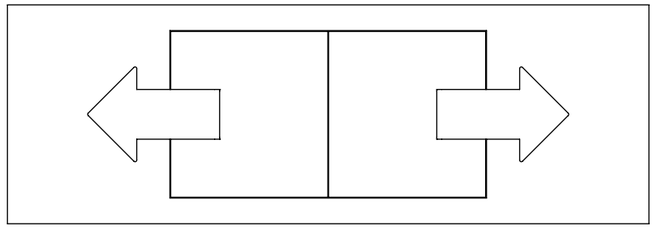

UK +44 (0) 1438 833577 **US** +1 (603) 742 9181
www.**FUTUREAUTOMATION**.NET

TECHNICAL SHEET
ISSUE 001
SHEET 2

SPS-VS-6 - QA2

SLIDING PANEL MECHANISM - VERTICAL SPLIT

future automation

SPECIFICATION	MEASUREMENTS
Minimum Screen Height	801 [31 1/2"]
Maximum Screen Height	950 [37 3/8"]
Minimum Screen Width	1400 [55 1/8"]
Maximum Screen Width	1900 [74 13/16"]
Maximum Moving Panel Weight	30Kg (66lbs) per panel
Maximum Screen Weight	45Kg (99lbs)
Total Mechanism Weight	TBC
Packaging Dimensions (LxWxH)	TBC
Shipping Weight	TBC
Movement Type	Motorised
Power Supply Required	110V - 240V AC
Power Consumption Max.	120W
Power Consumption Standby	3W
Mounting Patterns Supported	VESA 400, 300, 200 W x 400, 300, 200 H
Control Options	IR Remote, RS232
Product Options / Features	AB pairing option
Package Contents	Mechanism, IR remote control, Bolt Pack
Marine Suitable	Yes (Indoor)

1. Panel Closed

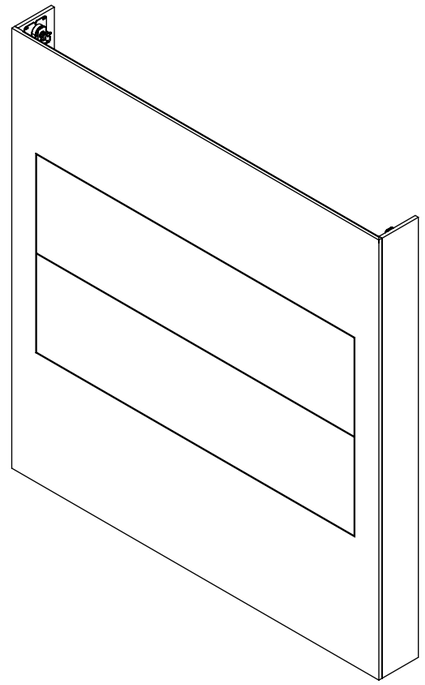

2. Panel Retracts

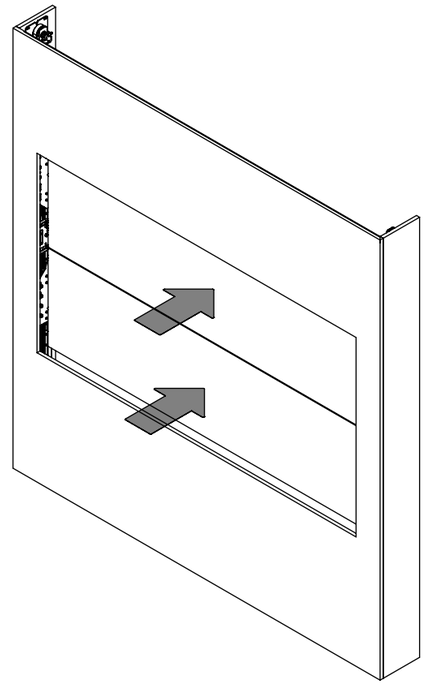

3. Panel Lifts

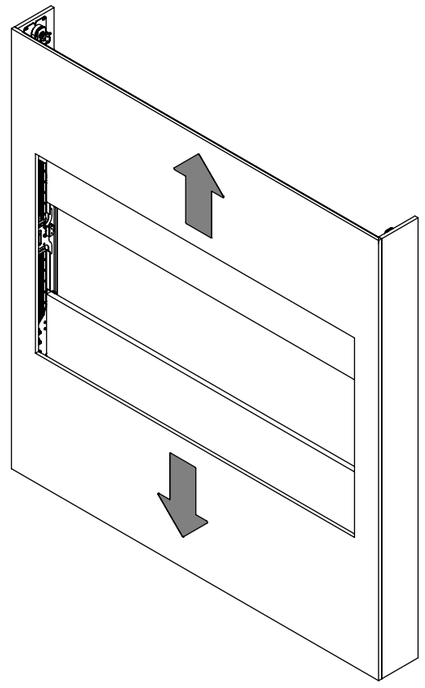

4. Screen Advances

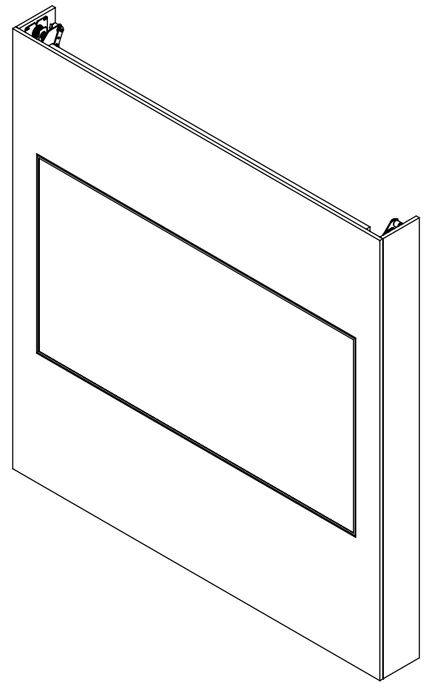

UK +44 (0) 1438 833577 **US** +1 (603) 742 9181
www.**FUTUREAUTOMATION**.NET

TECHNICAL SHEET
ISSUE 001
SHEET 3

SPS-VS-6 - QA2

SLIDING PANEL MECHANISM - VERTICAL SPLIT

future automation

CABINET DIMENSIONS - WIDTH AND HEIGHT

Screen Height	Install Height	Height Below Screen Center Line	Height Above Screen Center Line
[31 1/2"] 800 → [37 3/8"] 950	[90 15/16"] 2310	[47 7/16"] 1205	[43 1/2"] 1105

Screen Width	Install width
[55 1/8"] 1400 → [74 13/16"] 1900	Screen Width + 280

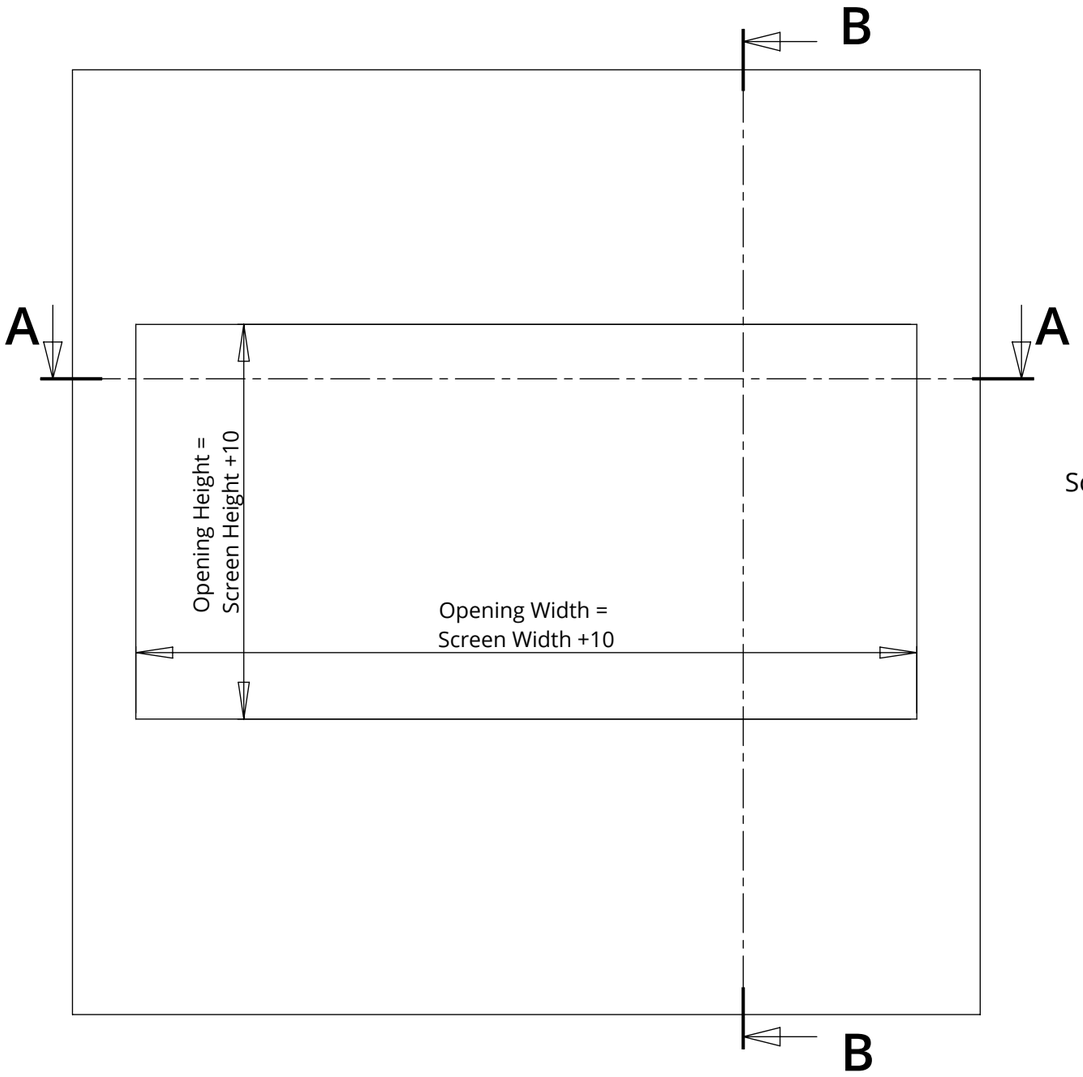

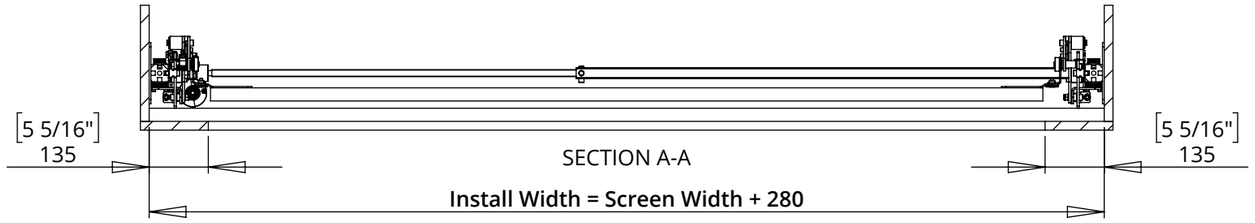

SECTION B-B
Minimum Screen Height

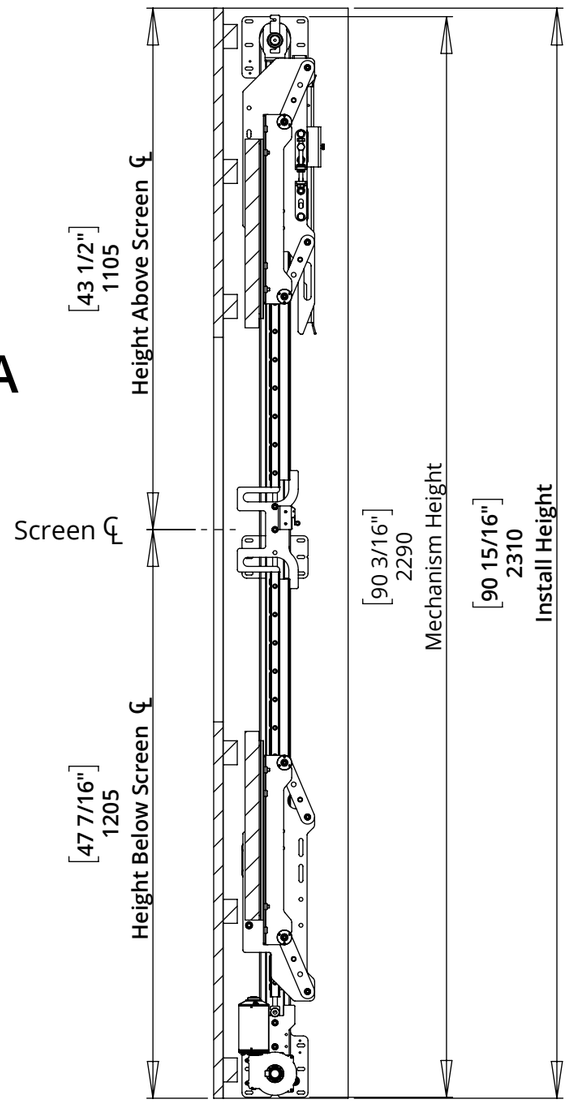

SECTION B-B
Maximum Screen Height

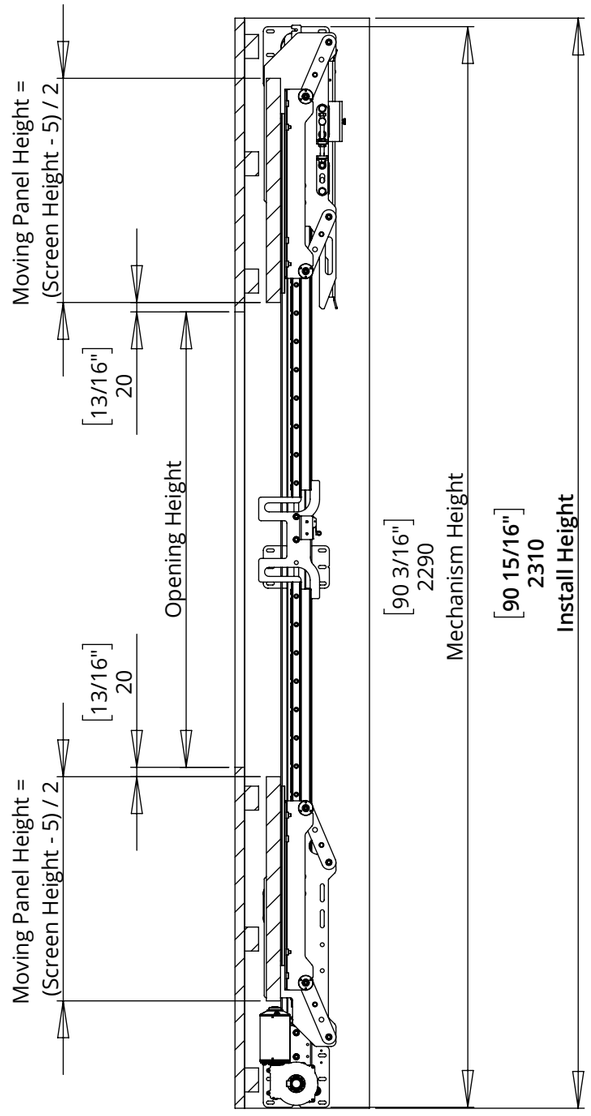

UK +44 (0) 1438 833577 **US** +1 (603) 742 9181
www.**FUTUREAUTOMATION**.NET

TECHNICAL SHEET
ISSUE 001
SHEET 4

SPS-VS-6 - QA2

SLIDING PANEL MECHANISM - VERTICAL SPLIT

future automation

CABINET DIMENSIONS - DEPTH

The minimum depth of 235mm [9 1/4"] allows for a maximum screen depth of 30mm [1 3/16"].

Screens with a greater thickness will need the cabinet depth to increase i.e. a 100mm [3 15/16"] thick screen will require a cabinet of 305mm [12"].

Screens thinner than 30mm [1 3/16"] must still use the minimum 235mm [9 1/4"] cabinet depth.

Screen - IN

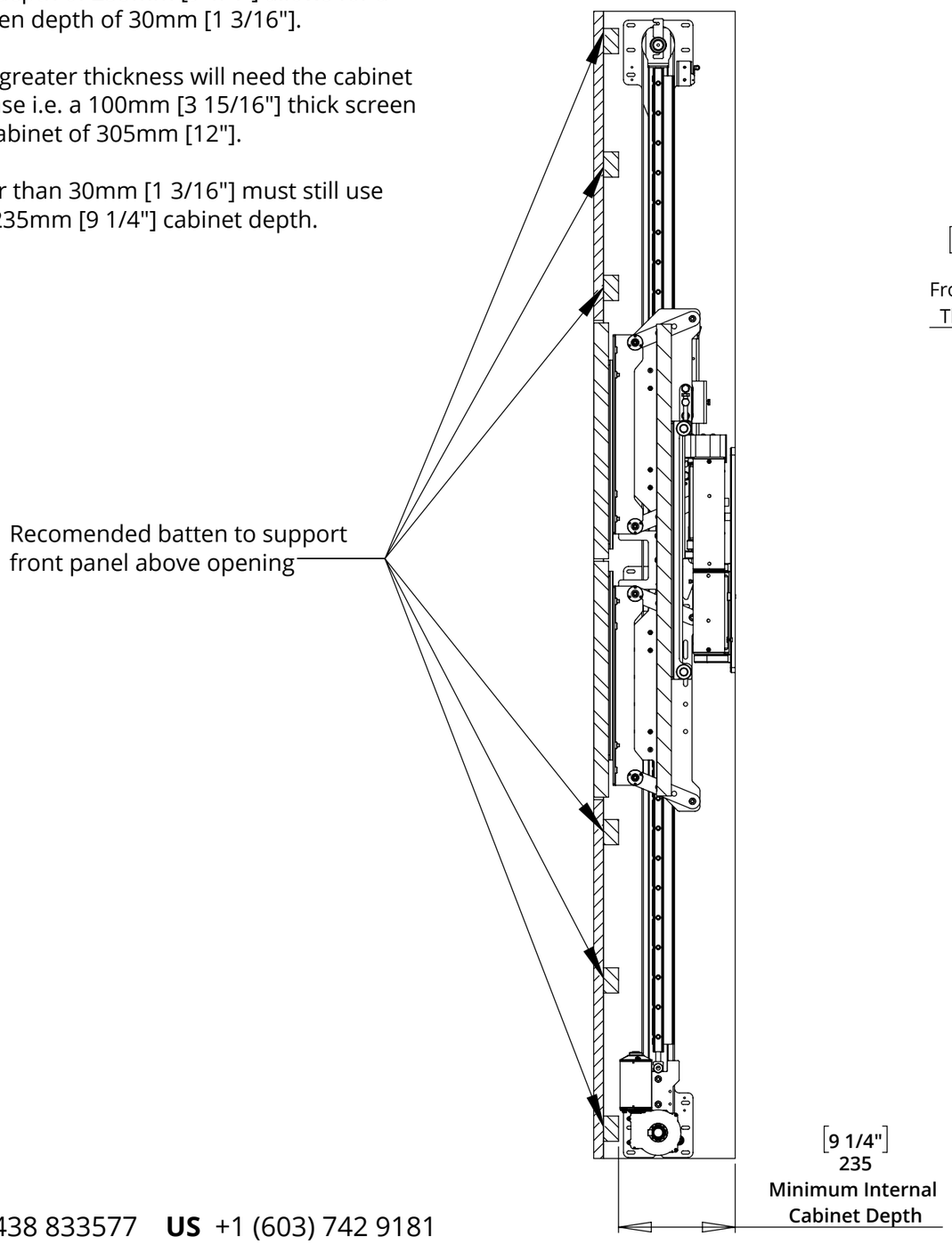

Screen - OUT

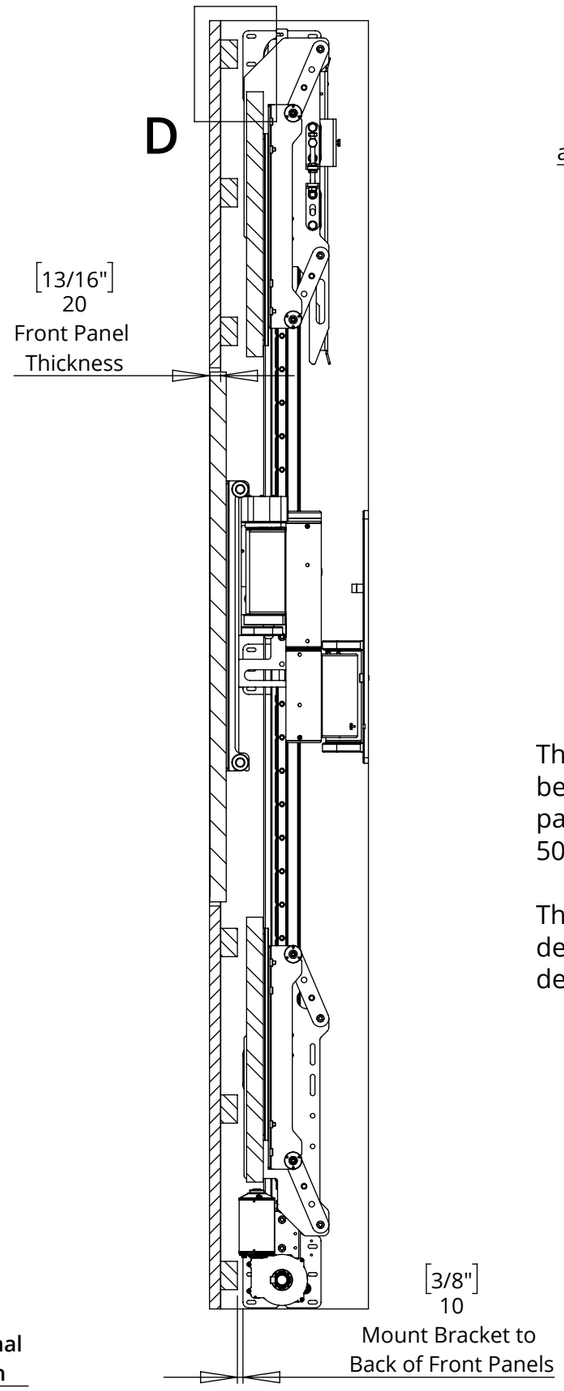

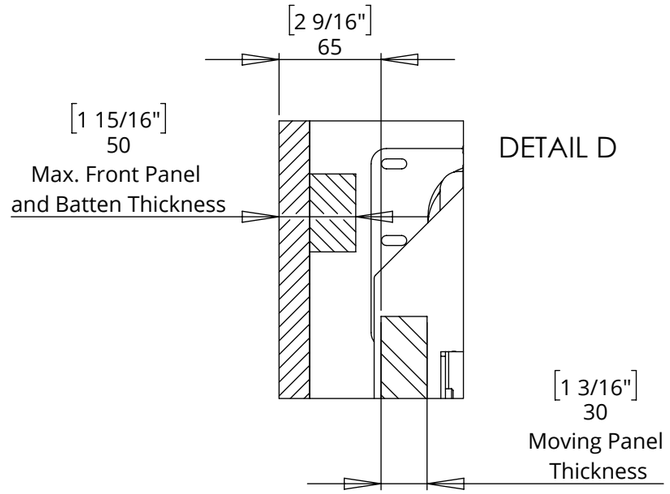

The moving panel retracts back by 65mm [2 9/16"] before splitting. For this reason it is advised the front panel work and support batten is no more than 50mm [1 15/16"] thick to give 15mm [9/16"] clearance.

Thicker panels are possible, but will add to the cabinet depth and require customisation to the mechanism design.

UK +44 (0) 1438 833577 **US** +1 (603) 742 9181
www.**FUTUREAUTOMATION**.NET

TECHNICAL SHEET
ISSUE 001
SHEET 5

SPS-VS-6 - QA2

SLIDING PANEL MECHANISM - VERTICAL SPLIT

future automation

QA2 - QUAD ARM

The Quad Arm has a service mode that can be used during installation and servicing of the mechanism and the screen.

This allows the screen to be advanced out from the wall to provide access to rear of the screen and inside the mechanism during fitting.

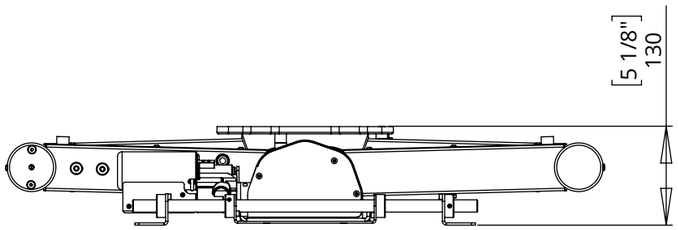

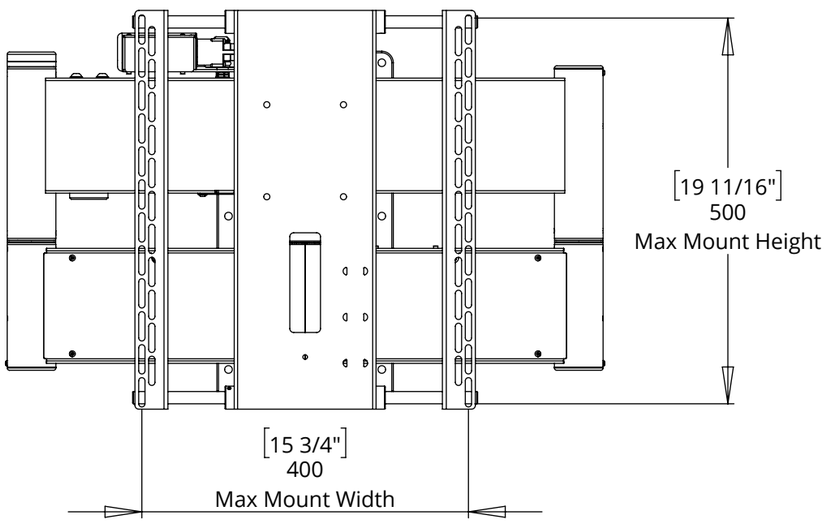

QA2 - IN

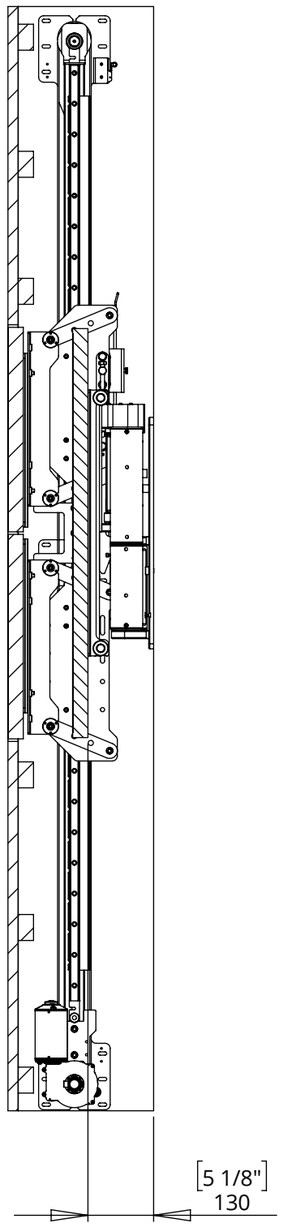

QA2 - OUT

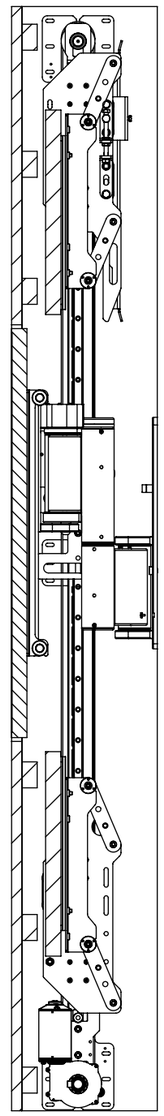

QA2 - SERVICE

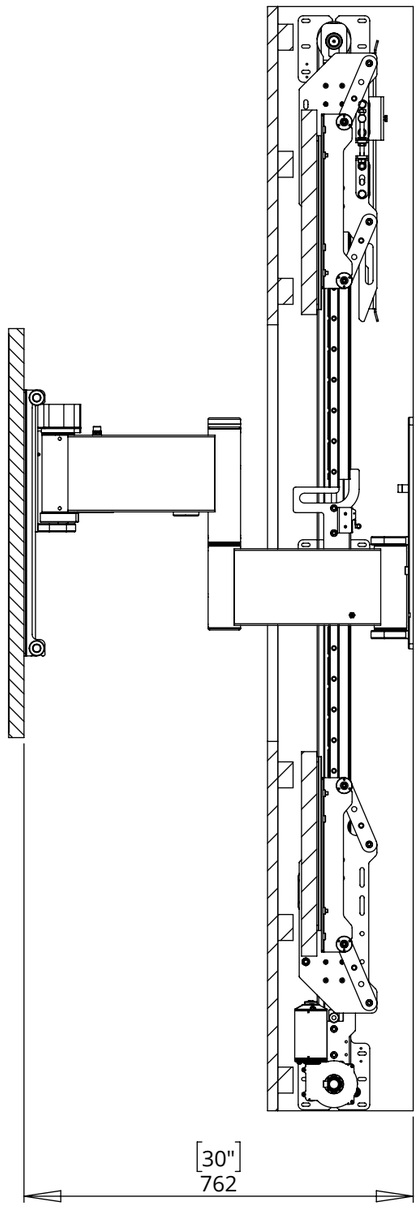

QA2 - SWIVEL

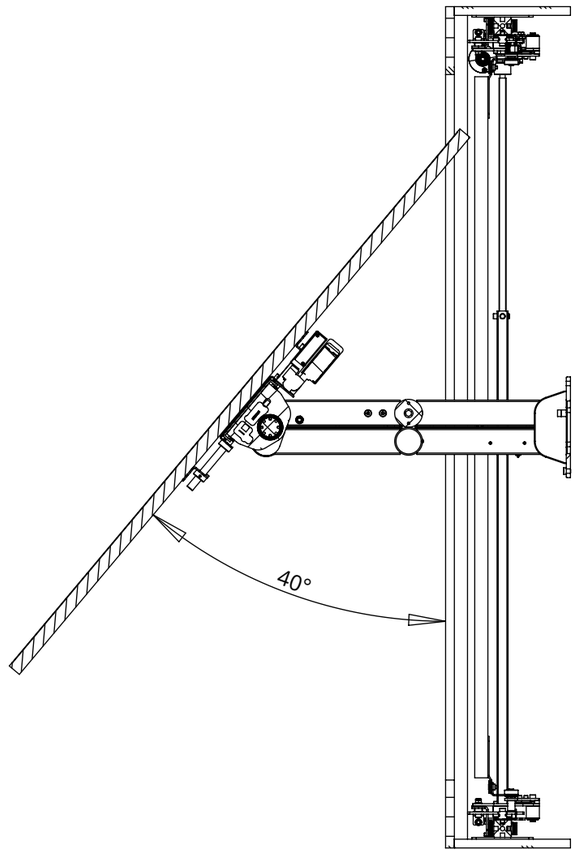

Maximum QA2 swivel is 75°.
However depending on the screen and cabinet depth this will need to be reduced to prevent the screen being obscured by the cabinet.

UK +44 (0) 1438 833577 **US** +1 (603) 742 9181
www.**FUTUREAUTOMATION**.NET

TECHNICAL SHEET
ISSUE 001
SHEET 6

SPS-VS-6 - QA2

SLIDING PANEL MECHANISM - VERTICAL SPLIT

future automation

CABINET DETAILING & ACCESS

The SPS mechanism requires certain access for installation and to be serviced.

For installation the top panel must be removable to provide access to all the fixing points of the SPS mechanism.

For servicing the best option is to have the areas to the left and right of the opening on hinges. This will provide enough access to everything that will be needed to service and maintain the mechanism. Alternatively the side panels could be made to be easily removable on suitable catches / fixings.

The Moving Panel Mechanism mounts to the side walls of the cabinet, and the Advance Bracket mounts to the back of the cabinet. It is essential that these surfaces can take the weight of the mechanism, moving panel and screen.

The SPS and QA2 are each supplied with a control box on a 3m [10'] flying lead linked together via contact closure. These must be fitted in an easily accessible location. These will be the first item to be checked if there is an issue with the mechanism. Mains power and control connections (IR sensor / receiver, RS232) are all made at the control box.

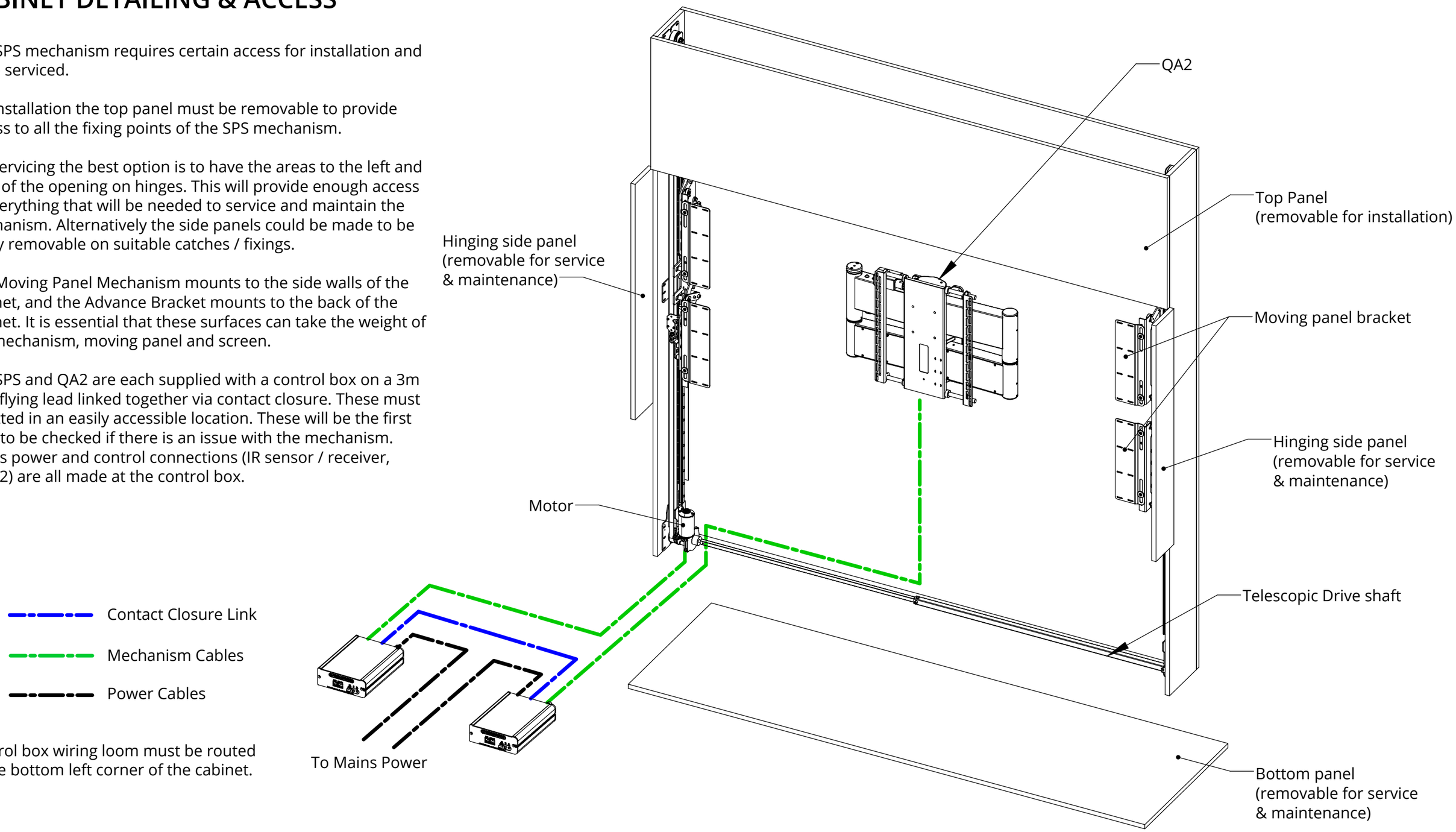

Control box wiring loom must be routed to the bottom left corner of the cabinet.

UK +44 (0) 1438 833577 **US** +1 (603) 742 9181
www.**FUTUREAUTOMATION**.NET

TECHNICAL SHEET
ISSUE 001
SHEET 7

SPS-VS-6 - QA2

SLIDING PANEL MECHANISM - VERTICAL SPLIT

future automation

CONTROL BOX

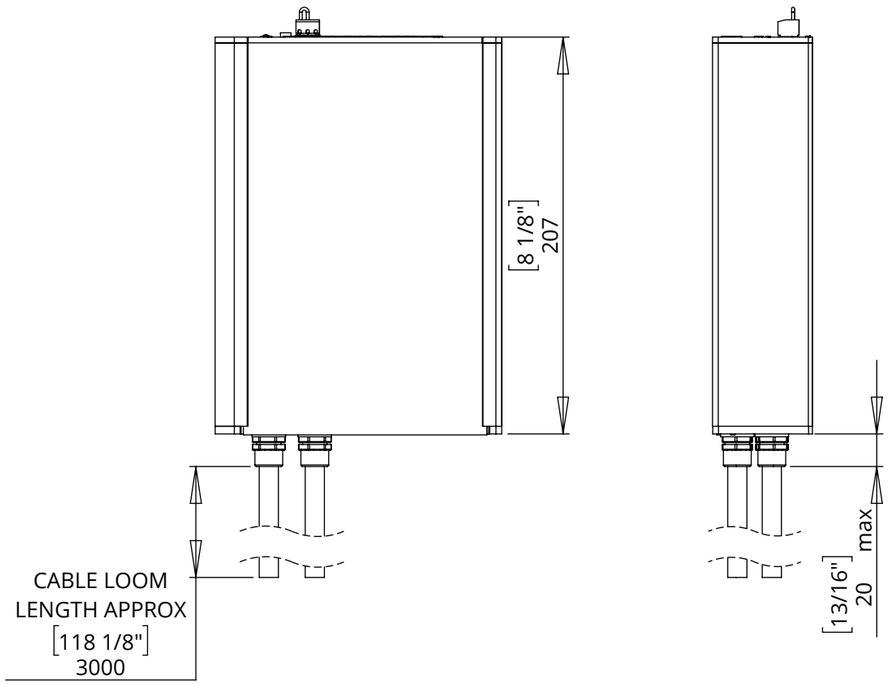

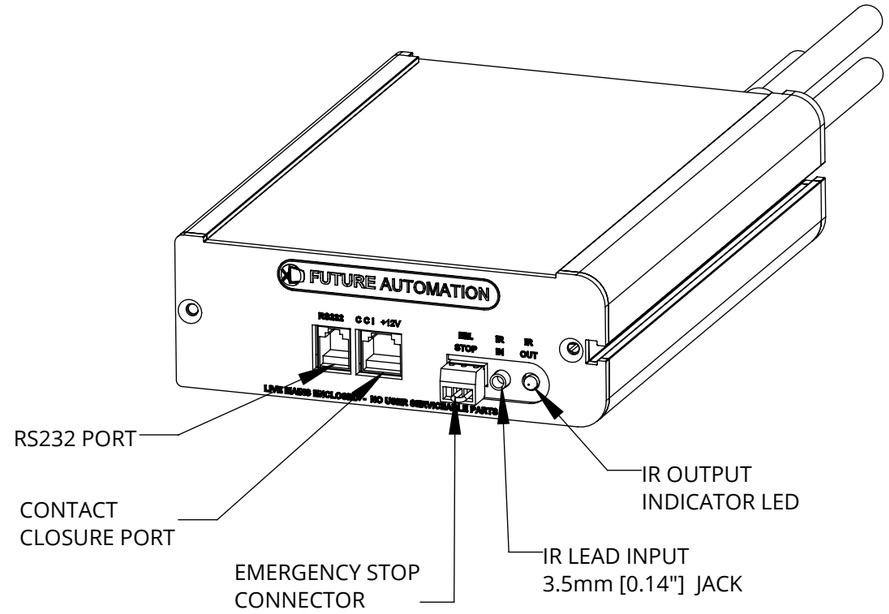

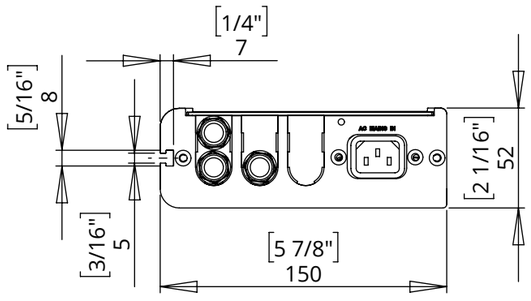

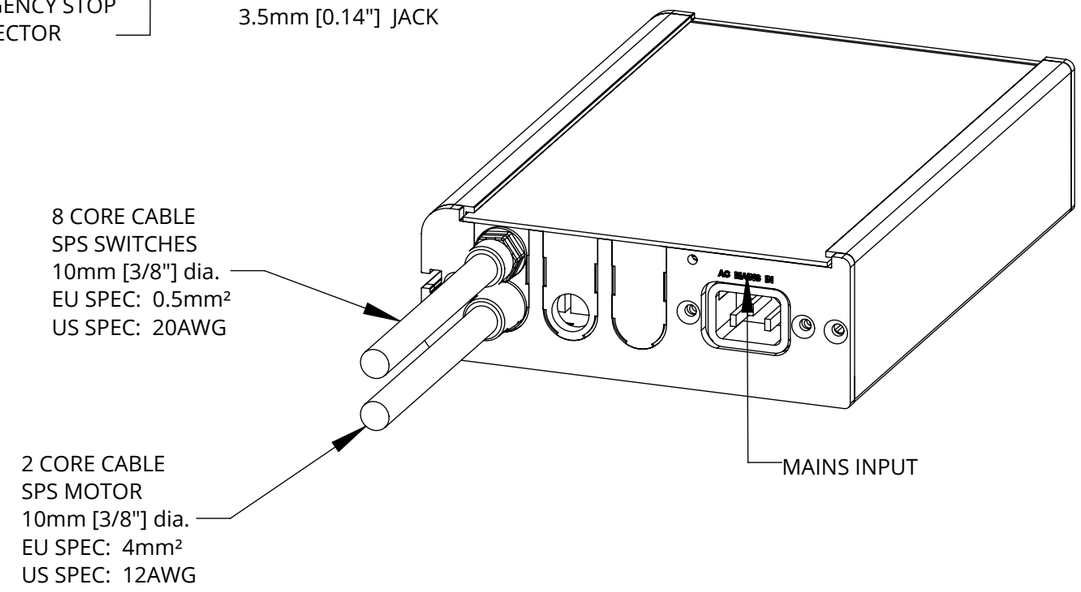

NOTES

- POWER SUPPLY UNIT (PSU) WILL ALLOW 110V OR 240V AC INPUT. THE SAME PSU IS USED FOR EU OR US MAINS SUPPLIES.
- OTHER THAN CONTROL CABLES, ALL CABLES TERMINATE AT CONTROL BOARD VIA STANDARD PHOENIX CONNECTORS.
- CABLE LOOM LENGTH SUPPLIED AT APPROX. 3m [118"]. LOOM CAN BE EXTENDED UP TO MAXIMUM OF APPROX. 10m [400"].
- MINIMUM CABLE BEND RADIUS 25mm [1"].

UK +44 (0) 1438 833577 **US** +1 (603) 742 9181
www.**FUTUREAUTOMATION**.NET

TECHNICAL SHEET
ISSUE 001
SHEET 8

SPS-VS-6 - QA2

SLIDING PANEL MECHANISM - VERTICAL SPLIT

future automation

INSTALLATION OVERVIEW

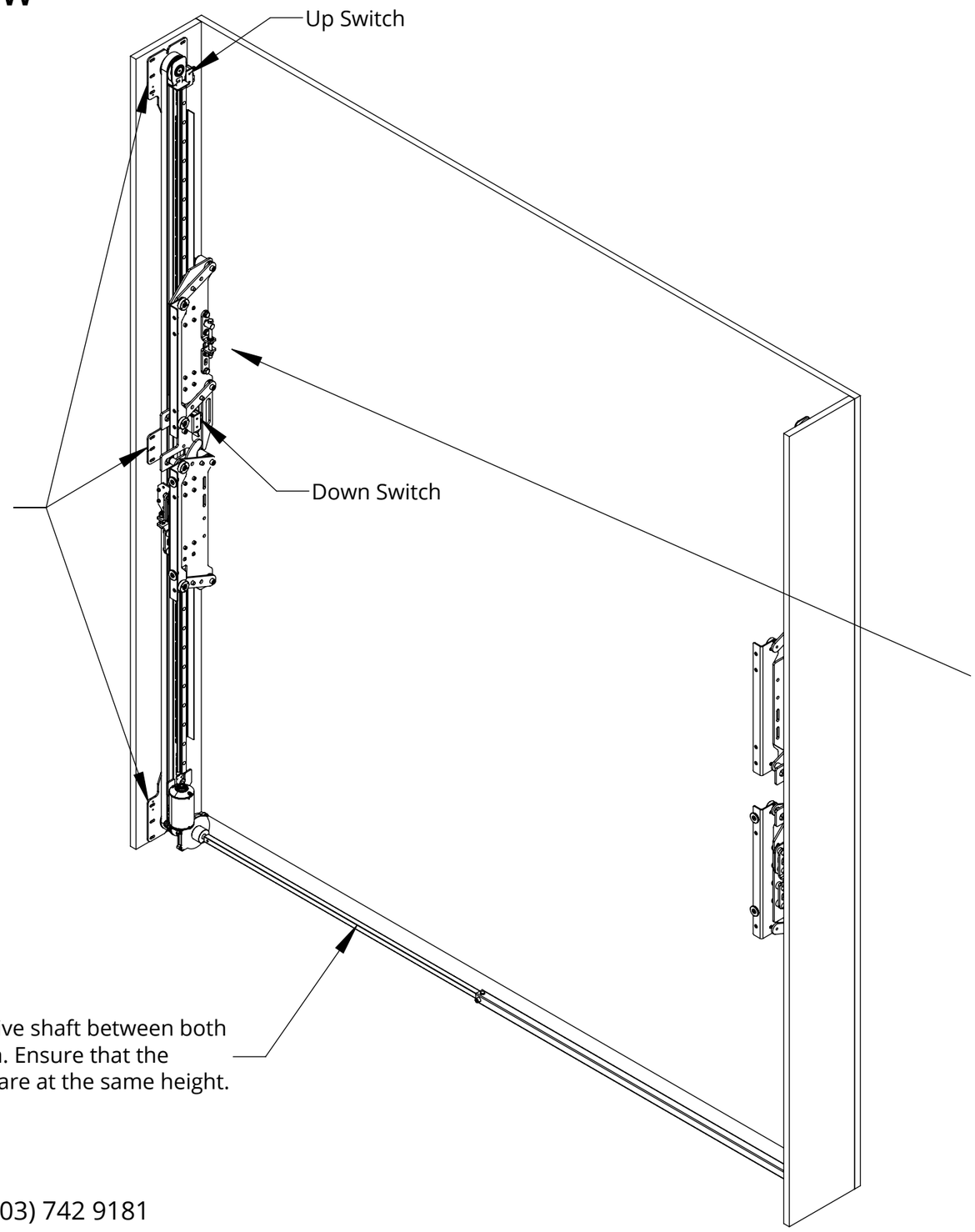

1. Mount the mechanism side channels to the side walls of the cabinet. Ensure the mechanism mount brackets are positioned 10mm back from the edge of the front panels.

2. Install the telescopic drive shaft between both sides of the mechanism. Ensure that the moving panel brackets are at the same height.

3. Run the mechanism, adjust the up switch so that the carriages moves the height of the moving panel + 25mm [1"].

Rear View

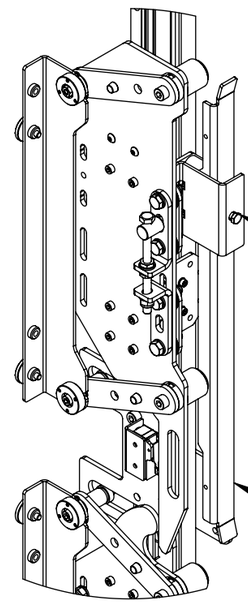

Up Switch Adjustment
Loosen the bolt and slide the switch striker to the desired position. Ensure the bolt is tightened after adjustment.

Switch Striker

UK +44 (0) 1438 833577 **US** +1 (603) 742 9181
www.**FUTUREAUTOMATION**.NET

TECHNICAL SHEET
ISSUE 001
SHEET 9

SPS-VS-6 - QA2

SLIDING PANEL MECHANISM - VERTICAL SPLIT

future automation

INSTALLATION OVERVIEW

4. Mount the moving panel to the moving panel brackets 15mm from the base of the moving panel and 94mm in from the edge.

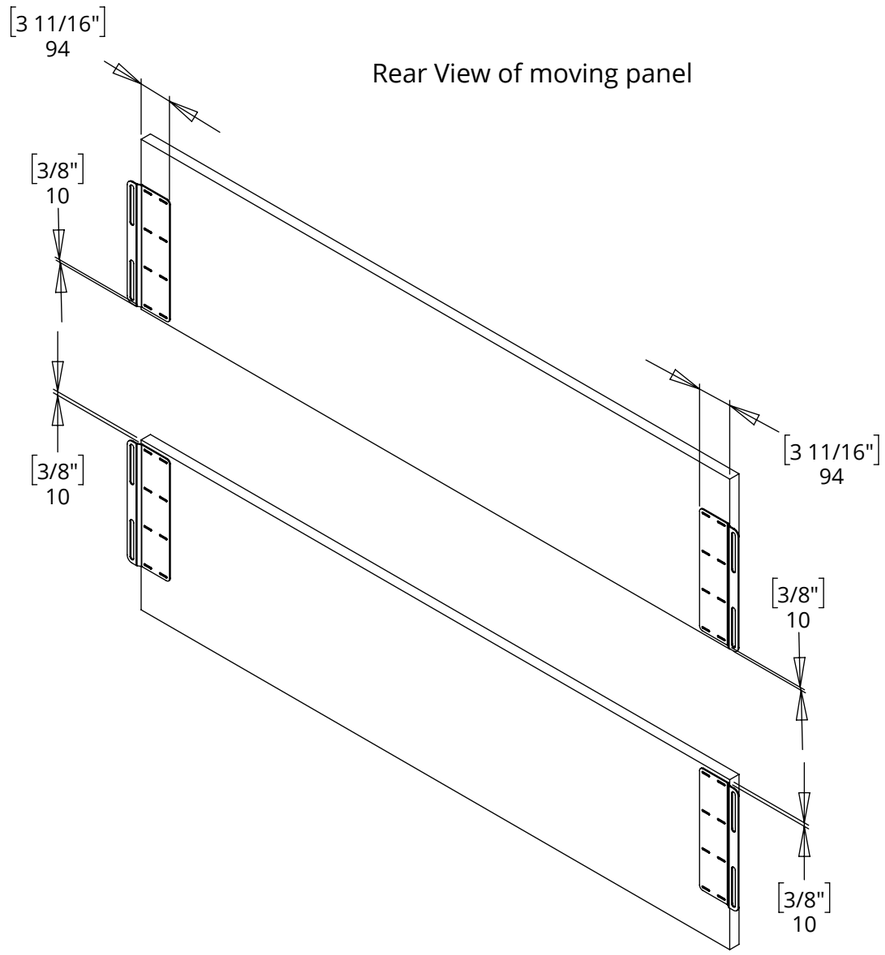

5. Mount the moving panel back onto the mechanism, use the slots in the mount brackets to align the panel and get it into the desired position.

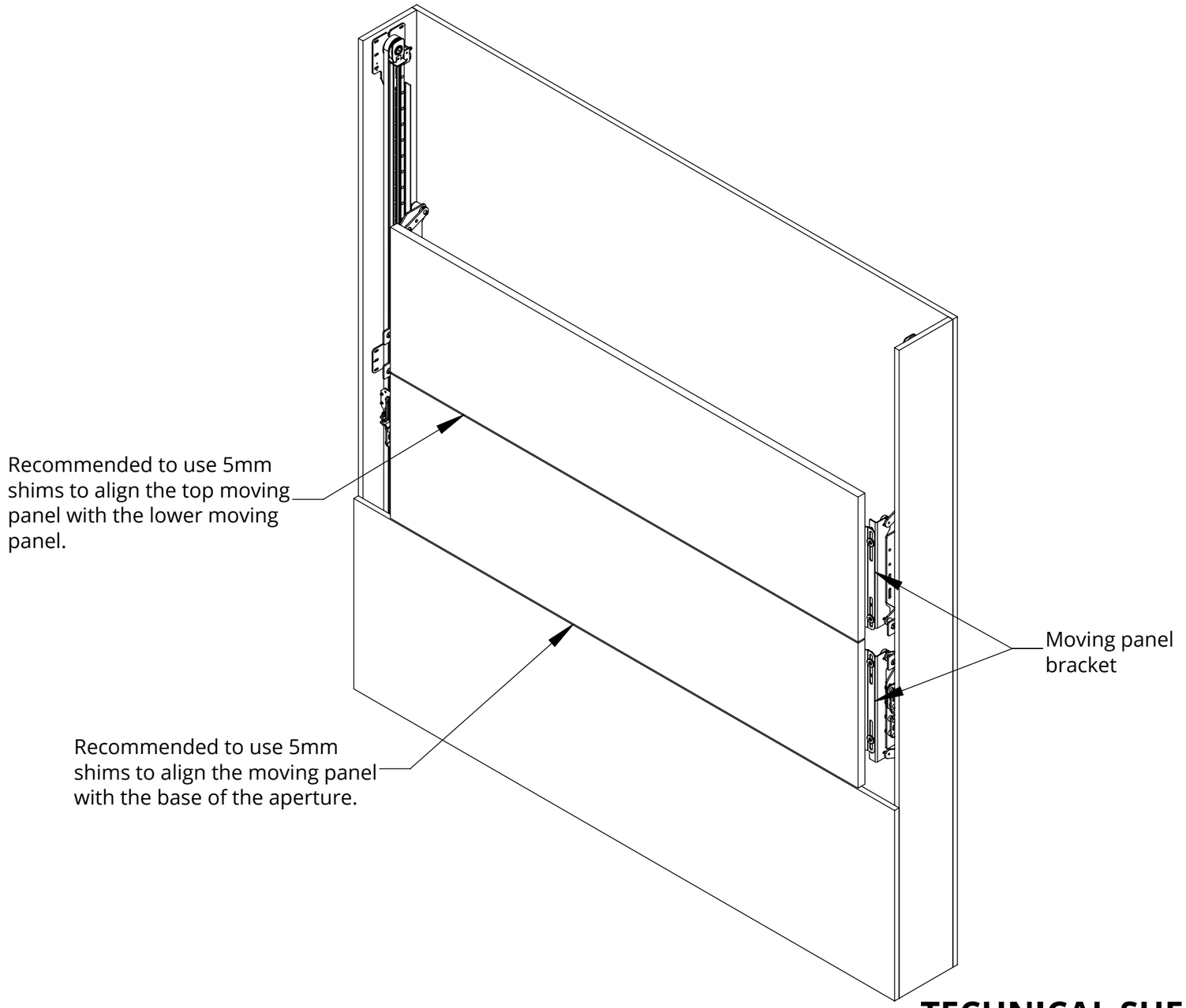

UK +44 (0) 1438 833577 **US** +1 (603) 742 9181
www.**FUTUREAUTOMATION**.NET

TECHNICAL SHEET
ISSUE 001
SHEET 10