DRAPER

EN

230V

DUAL ACTION POLISHER

01816 - DA650SF SPARE PARTS DRAWING

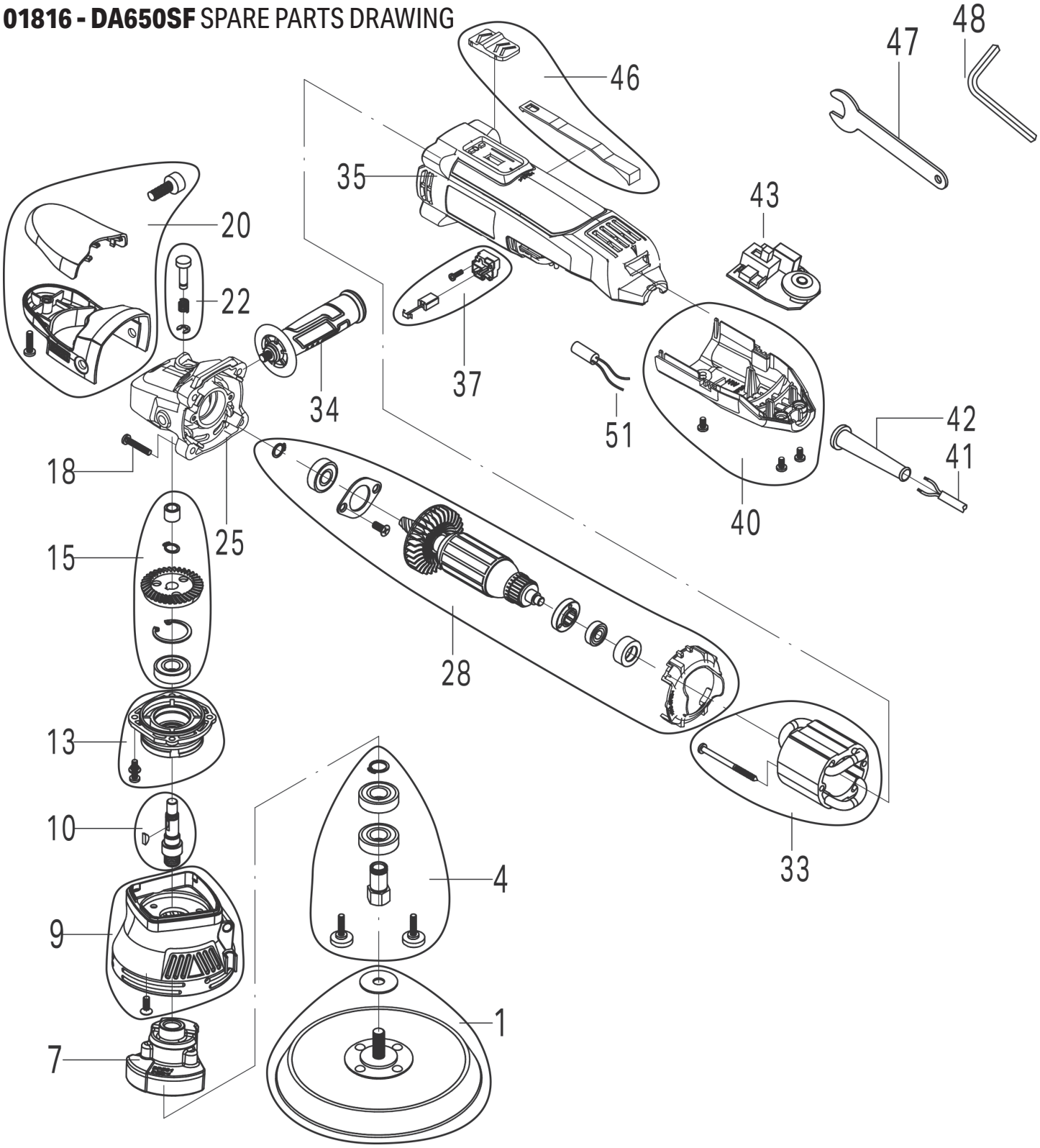

DRAPER

EN

230V

DUAL ACTION POLISHER

01816 - DA650SF SPARE PARTS LISTING

Key No.	Part No.	Stock No.	Description
1	YDA650SF-1	97996	Backing pad
4	YDA650SF-4	97997	Hex output shaft assembly
7	YDA650SF-7	98005	Eccentric bearing block
9	YDA650SF-9	98006	Blade guard assembly
10	YDA650SF-10	98007	Output shaft assembly
13	YDA650SF-13	98008	Front cover assembly
15	YDA650SF-15	98009	Big gear assembly
20	YDA650SF-20	98010	Head guard assembly
22	YDA650SF-22	98011	Self-lock pin assembly
25	YDA650SF-25	98014	Gear housing
28	YDA650SF-28	98015	Rotor assembly
33	YDA650SF-33	98017	Stator assembly
34	YDA650SF-34	98018	Auxiliary handle
35	YDA650SF-35	98019	Housing
37	YDA650SF-37	98020	Carbon brush assembly
40	YDA650SF-40	98021	rear cover
41	YDA650SF-41	98025	Cable jacket
42	YDA650SF-42	98026	Cable plug
43	YDA650SF-43	98027	Speed breadboard
46	YDA650SF-46	98029	Push button assembly
47	YDA650SF-47	98032	Wrench
48	YDA650SF-48	98033	Hex key
51	YDA650SF-51	98034	Detector

Key No.	Part No.	Stock No.	Description