GB

230V SUBMERSIBLE

WATER PUMP

WITH INTERGRATED FLOAT SWITCH

98917 - SWP150IFS SPARE PARTS DRAWING

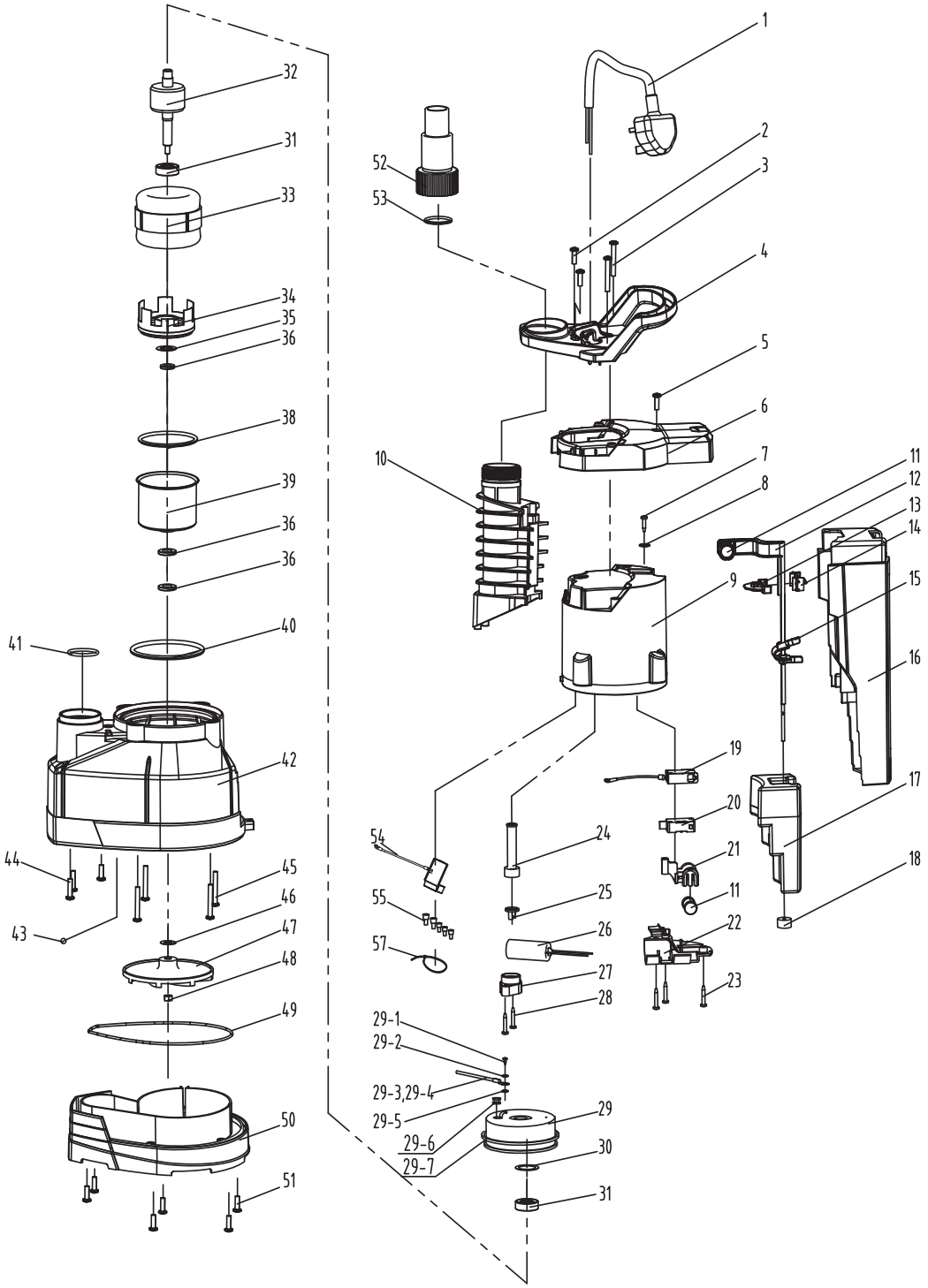

Helpline: +44 (0) 23 8049 4344 Sales Desk: +44 (0) 23 8049 4333 General Enquiries: +44 (0) 23 8026 6355 internet: drapertools.com email: sales@drapertools.com

Draper Tools Limited, Hursley Road, Chandler's Ford, Eastleigh, Hampshire. SO53 1YF UK.

GB

DRAPER®

230V SUBMERSIBLE

WATER PUMP

WITH INTERGRATED FLOAT SWITCH

98917 - SWP150IFS SPARE PARTS LISTING

KEY No.	PART No.	STOCK No.	DESCRIPTION
1	Y-SWP150IFS-01	90806	CABLE
3	Y-SWP150IFS-03	90832	CROSS RECESSED TAPPING SCREW
4	Y-SWP150IFS-04	90853	HANDLE
6	Y-SWP150IFS-06	90856	COVER PLATE
7	Y-SWP150IFS-07	90858	TAPPING SCREW
8	Y-SWP150IFS-08	90859	O RING
9	Y-SWP150IFS-09	90872	PUMP REAR HOUSING
10	Y-SWP150IFS-10	90874	OUTPUT CONNECTOR
11	Y-SWP150IFS-11	90875	MAGNETS
12	Y-SWP150IFS-12	90876	GUIDE ROD
13	Y-SWP150IFS-13	90881	LOCK BLOCK
14	Y-SWP150IFS-14	90882	BLOCK
15	Y-SWP150IFS-15	90883	BLOCK
16	Y-SWP150IFS-16	90884	SHIELD
17	Y-SWP150IFS-17	90885	FLOAT SWITCH COMPONENTS
18	Y-SWP150IFS-18	90886	RUBBER RING
19	Y-SWP150IFS-19	90887	GROUNDING COVER COMPONENTS
20	Y-SWP150IFS-20	90888	MICRO SWITCH COMPONENTS
21	Y-SWP150IFS-21	90890	SWITCH FRAME
22	Y-SWP150IFS-22	90892	LOCK BLOCK
23	Y-SWP150IFS-23	90893	TAPPING SCREW
24	Y-SWP150IFS-24	90894	CABLE SHEATH
25	Y-SWP150IFS-25	90895	CABLE RETAINER
26	Y-SWP150IFS-26	90896	6UF CAPACITOR
27	Y-SWP150IFS-27	90900	CABLE STAY
28	Y-SWP150IFS-28	90903	CROSS RECESSED TAPPING SCREW
29	Y-SWP150IFS-29	90905	MOTOR REAR COVER ASSEMBLY
30	Y-SWP150IFS-30	90906	CORRUGATED WASHER
31	Y-SWP150IFS-31	90907	BEARING
32	Y-SWP150IFS-32	90908	ROTOR
33	Y-SWP150IFS-33	90909	STATOR
34	Y-SWP150IFS-34	90910	FRONT LINER
35	Y-SWP150IFS-35	90913	GASKET
36	Y-SWP150IFS-36	90914	OIL SEAL
37	Y-SWP150IFS-37	90915	FRONT ALUMINIUM BUSHING
38	Y-SWP150IFS-38	90916	O RING
39	Y-SWP150IFS-39	90917	MOTOR FRONT COVER
40	Y-SWP150IFS-40	90928	O RING
41	Y-SWP150IFS-41	90929	O RING
42	Y-SWP150IFS-42	90932	MAIN PUMP HOUSING
43	Y-SWP150IFS-43	90933	STEEL BALL

KEY No.	PART No.	STOCK No.	DESCRIPTION
44	Y-SWP150IFS-44	90937	CROSS RECESS TAPPING SCREW
45	Y-SWP150IFS-45	90939	PAN TYPE TAPPING SCREW
46	Y-SWP150IFS-46	90940	ADJUSTING WASHER
47	Y-SWP150IFS-47	90941	IMPELLER
48	Y-SP53-11	90530	NUT
49	Y-SWP150IFS-49	90944	O RING
50	Y-SWP150IFS-50	90945	PUMP BASE
52	Y-SWP150IFS-52	90947	OUTPUT CONNECTOR
53	Y-SWP150IFS-53	90948	O RING
54	Y-SWP150IFS-54	90949	GROUND COVER WELDED COMPONENTS
55	Y-SWP150IFS-55	90950	NYLON SAFE PRESSING CAPS
2,5,51	Y-SWP150IFS-02	90951	

Helpline: +44 (0) 23 8049 4344 Sales Desk: +44 (0) 23 8049 4333 General Enquiries: +44 (0) 23 8026 6355 internet: drapertools.com email: sales@drapertools.com

Draper Tools Limited, Hursley Road, Chandler's Ford, Eastleigh, Hampshire. SO53 1YF UK.