DRAPER

EN

Original Instructions
Version 3
January 2026

230V 200mm
BANDSAW

98471

UK CA CE

1. Preface

These are the original product instructions. Read the instruction manual in full and retain for future reference.

Please visit **drapertools.com/manuals** for the latest version of this manual and the associated parts list, if applicable.

1.1 Product Reference

User Manual for: 230V 200mm Bandsaw

Stock No: 98471

Part No: BS200/250SF

1.2 Revisions

Version 1: July 2020
First release

Version 2: April 2022

Version 3: January 2026

1.3 Understanding the Safety Content of This Manual

WARNING! – Situations or actions that may result in personal injury or death.

CAUTION! – Situations or actions that may result in damage to the product or surroundings.

Important: – Information or instructions of particular importance.

1.4 Copyright © Notice

Copyright © Draper Tools Limited.

Permission is granted to reproduce this manual for personal and educational use **ONLY**. Commercial copying, redistribution, hiring or lending is strictly prohibited.

No part of this manual may be stored in a retrieval system or transmitted in any other form or means without written permission from Draper Tools Limited.

In all cases, this copyright notice must remain intact.

2. Contents

1. Preface **2**
- 1.1 Product Reference 2
- 1.2 Revisions 2
- 1.3 Understanding the Safety Content of This Manual 2
- 1.4 Copyright © Notice 2

2. Contents **3**

3. Product Introduction **4**
- 3.1 Intended Use 4
- 3.2 Specification 4

4. Health and Safety Information **5**
- 4.1 General Health and Safety Precautions 5
- 4.2 Specific Safety Instructions for Bandsaws 6
- 4.3 Connection to the Power Supply 6
- 4.4 Residual Risk 7

5. Identification and Unpacking **8**
- 5.1 Product Overview 8
- 5.2 What's in the Box? 9
- 5.3 Packaging 9

6. Preparation Instructions **10**
- 6.1 Installing the Table (Fig.1) 10
- 6.2 Levelling the Table (Fig.2) 10
- 6.3 Fitting the Rip Fence Rail (Fig.3) 10
- 6.4 Fitting the Rip Fence (Fig.4) 10

7. Operating Instructions **11**
- 7.1 **ON/OFF** Operation (Fig.5) 11
- 7.2 Tilting the Table (Fig.6) 11
- 7.3 Opening & Locking the Upper and Lower Doors (Fig.7) 11
- 7.4 Blade Guard Slide Adjustment (Fig.8) 12
- 7.5 Tensioning the Saw Blade Band (Fig.9) 12
- 7.6 Changing and Setting a New Blade Band (Fig.10 – Fig.11) 12
- 7.7 Blade Tracking Adjustment (Fig.12 – Fig.13) 13
- 7.8 Upper Blade Guide Assembly Adjustment (Fig.14 – Fig.15) 13
- 7.9 Lower Blade Guide Adjustment (Fig.16) 14
- 7.10 Mitre Guide (Fig.17) 14

8. Tips on using the Bandsaw **14**
- 8.1 General Tips 14
- 8.2 Rip Sawing 14
- 8.3 Cross Cutting 15
- 8.4 Freehand Sawing 15

9. Maintenance and Troubleshooting **15**
- 9.1 General Maintenance 15
- 9.2 Changing Wheel Rubber Tyres 15
- 9.3 Troubleshooting 16

10. Spares, Returns and Disposal **16**

11. Warranty **17**

12. Explanation of Symbols **17**

3. Product Introduction

3.1 Intended Use

This bandsaw is designed to cut wood, wood derived materials and plastics by means of a revolving endless saw band which is carried on two band wheels. The workpiece is manually fed on to the saw band.

Any other application beyond the conditions established for use will be considered misuse. Draper Tools accepts no responsibility for improper use of this product.

This product is intended for domestic and infrequent light-duty trade use.

Read this manual in full before attempting to assemble, operate or maintain the product, and retain it for later use.

3.2 Specification

Stock No.:	**98471**
Part No.:	**BS200/250SF**
Rated voltage:	230V/50Hz
Rated input:	250W
Speed (no load):	1,400rpm
Maximum throat capacity:	200mm
Maximum capacity under guide:	85mm
Blade speed:	15M/s
Bandsaw blade length	1400mm
Noise emissions:	
Sound pressure level:	77.4dB (A)
Sound power level:	90.4dB (A)
Net weight:	15kg
Cord length (approx.):	2M

Important: The declared noise emissions values have been measured in accordance with a standard test method and may be used for comparing one tool with another. These values may also be used in a preliminary assessment of exposure.

WARNING! The noise emissions during actual use of the product can differ from the declared values depending on the type of work and the area upon which it is used. Before each use, estimate the likely exposure resulting from the actual conditions of use. Take into account all parts of the operation cycle in order to identify any safety measures required to protect the operator.

4. Health and Safety Information

WARNING! When using electric tools basic safety precautions should ALWAYS be followed to reduce the risk of fire, electric shock and personal injury including the following.

Read all these instructions before attempting to operate this product and save these instructions.

4.1 General Health and Safety Precautions

- **Keep work area clean and well lit – Cluttered or dark areas invite accidents.**
- **DO NOT operate the bandsaw in explosive atmospheres, such as in the presence of flammable liquids, gases or dust –** tools create sparks which may ignite the dust or fumes.
- **DO NOT** expose the bandsaw to rain or wet conditions.
- **Avoid body contact with earthed or grounded surfaces, such as pipes, radiators, ranges and refrigerators –** There is an increased risk of electric shock if your body is earthed or grounded.
- **DO NOT** let persons, especially children, not involved in the work touch the tool or the extension cord and keep them away from the work area.
- Store idle tools out of the reach of children and **DO NOT** allow persons unfamiliar with the tool or these instructions to operate the tool.
- **DO NOT** force the tool – use the correct tool for your application.
- **DO NOT** use the bandsaw for purposes not intended.
- Dress properly. **DO NOT** wear loose clothing or jewellery. Keep your hair, clothing and gloves away from moving parts – loose clothes, jewellery or long hair can be caught in moving parts.
- **ALWAYS** wear a suitable dust mask and eye protection when operating the bandsaw.
- If devices are provided for the connection of dust extraction and collection facilities, ensure these are connected and properly used. Use of dust collection can reduce dust-related hazards.
- **DO NOT** abuse the cord. **NEVER** use the cord for carrying, pulling or unplugging the bandsaw.
- Keep cord away from heat, oil, sharp edges or moving parts.
- **DO NOT** overreach. Keep proper footing and balance at all times.
- **Secure the workpiece –** where possible use clamps or a vice to hold the work. It is safer than using your hand.
- Keep cutting tools sharp and clean for better and safer performance.
- Keep handles and grasping surfaces dry, clean and free from oil and grease.
- Remove any adjusting key or wrench before turning the bandsaw on.
- **Avoid unintentional starting -** ensure switch is in the **'OFF'** position when plugging in.
- When operating an electric tool outdoors, use an extension cord suitable for outdoor use.
- Stay alert, watch what you are doing and use common sense when operating an electric tool.
- **DO NOT** use an electric tool while you are tired or under the influence of drugs, alcohol or medication.
- Check for worn or damaged parts before using the bandsaw:
  - Carefully check to determine that it will operate properly and perform its intended function.
  - Check for alignment of moving parts, binding and breakage of parts, mounting and any other conditions that may affect its operation.
  - A guard or any other part that is damaged should be properly repaired or replaced by an authorised service centre unless otherwise indicated in this instruction manual.
  - Defective switches should be replaced by an authorised service centre.
  - **DO NOT** use if the switch does not turn it on and off.

WARNING! The use of any accessory or attachment not recommended in this instruction manual may present a risk of personal injury.

- **ALWAYS** switch off and unplug the bandsaw before carrying out any adjustment, changing accessories, servicing or maintenance.
- Inspect the tool cord and any extension cords regularly and if damaged have it repaired by an authorised service facility.
- Have your bandsaw serviced by a qualified repair person using only identical replacement parts.

4.2 Specific Safety Instructions for Bandsaws

- **DO NOT** use saw bands which are damaged or deformed.
- Replace table insert when worn.
- Connect the bandsaw to a dust collecting device when sawing wood.
- **DO NOT** operate the bandsaw when the door or guard protecting the saw band is open.
- Take care; the selection of the saw band and the speed will depend on the material to be cut.
- **DO NOT** clean the saw band while it is in motion.
- Wear suitable personal protective equipment, when necessary; this could include:
  - Hearing protection to reduce the risk of induced hearing loss.
  - Respiratory [breathing] protection to reduce the risk of inhalation of harmful dust.
  - Gloves for handling the saw band and rough material.
- **ALWAYS** keep hands and fingers away from the saw band, especially when coming to the end of a cut.
- Use the push stick supplied or piece of scrap wood to do the pushing and guiding when sawing small pieces which require the fingers to be close to the saw band.
- Switch the bandsaw off and let the blade come to a stop before removing scrap pieces from the table.
- Make all adjustments and set up with the power off and plug removed from power supply. This includes tilting the table, adjusting the saw band guards, guide, tension and tracking.
- Guards must be in place and securely fastened when performing any operation.
- Securely lock all adjustable parts so they cannot move during operation. This will prevent distraction from the operation.
- When sawing curves, make relief cuts to allow removal of scrap material. This will help prevent undue twisting or binding of the saw blade. The relief cuts are made before starting the curved saw cut.
- Hold material firmly and feed into the band at a moderate speed.
- Be sure to use the correct band size and type for the application.
- **DO NOT** saw any material that does not have a flat surface, unless a suitable support is used.
- Permanently fix the bandsaw to a bench or stand before performing cutting operations.
- Use in a well ventilated area to minimise airborne dust. Use of a suitable extraction device and PPE equipment is required.
- Before freeing any jammed material turn switch off, disconnect from power supply and wait for all moving parts to stop.
- Before starting to cut, watch and listen to the saw while it runs. If it makes an unfamiliar noise or vibrates excessively, stop immediately. Turn the saw off and disconnect from the power supply. **DO NOT** attempt to use the saw until the problem has been identified and rectified.
- Repair or servicing required on this product should be carried out by a qualified service agent. When servicing use only identical replacement parts.
- When straight cutting against the fence use a push stick.
- During transportation the saw band guard should be fully down and close to the table.
- When bevel-cutting with the table inclined, place the guide on the lower half of the table.
- When cutting round timber use a suitable holding device to prevent twisting of the workpiece.
- Lifting and transportation must be carried out using the indicated points only.
- **DO NOT** use guarding for handling or transportation.
- Move the adjustable guard as to the workpiece as practicable.
- Use the correct adjustment of the saw band guards.

4.3 Connection to the Power Supply

CAUTION! Risk of electric shock.
DO NOT OPEN

This appliance is supplied with an approved plug and cord for your safety.

If the power supply cord is damaged, it must be replaced by Draper Tools, an authorised service agent or similarly qualified personnel in order to avoid a hazard.

The damaged or incomplete plug, when cut from the cord, shall be disabled to prevent connection to a live electrical outlet.

4. Health and Safety Information

This appliance is Class I† and is designed for connection to a power supply matching that detailed on the rating label and compatible with the plug fitted.

The value of the fuse fitted is marked on the pin face of the plug. Should the fuse need replacing, use a small plain-slot screwdriver to remove the fuse cover. Ensure the substitute is of the correct rating, approved to BS 1362 and ASTA or BS Kite marked. This should only be performed by suitably qualified personnel.

ASTA

BSI

Important: If an extension lead is required, use an approved and compatible lead rated for this appliance.

Unwind the entire cable and follow all the instructions supplied with the extension lead.

† Earthed ⏚ : This product requires an earth connection to protect against electric shock from accessible conductive parts in the event of failure of the basic insulation.

4.4 Residual Risk

The safety instructions in this manual cannot account for all possible conditions and situations that may occur. Exercise common sense and caution when using this product and protect against any additional conceivable risks.

5. Identification and Unpacking

5.1 Product Overview

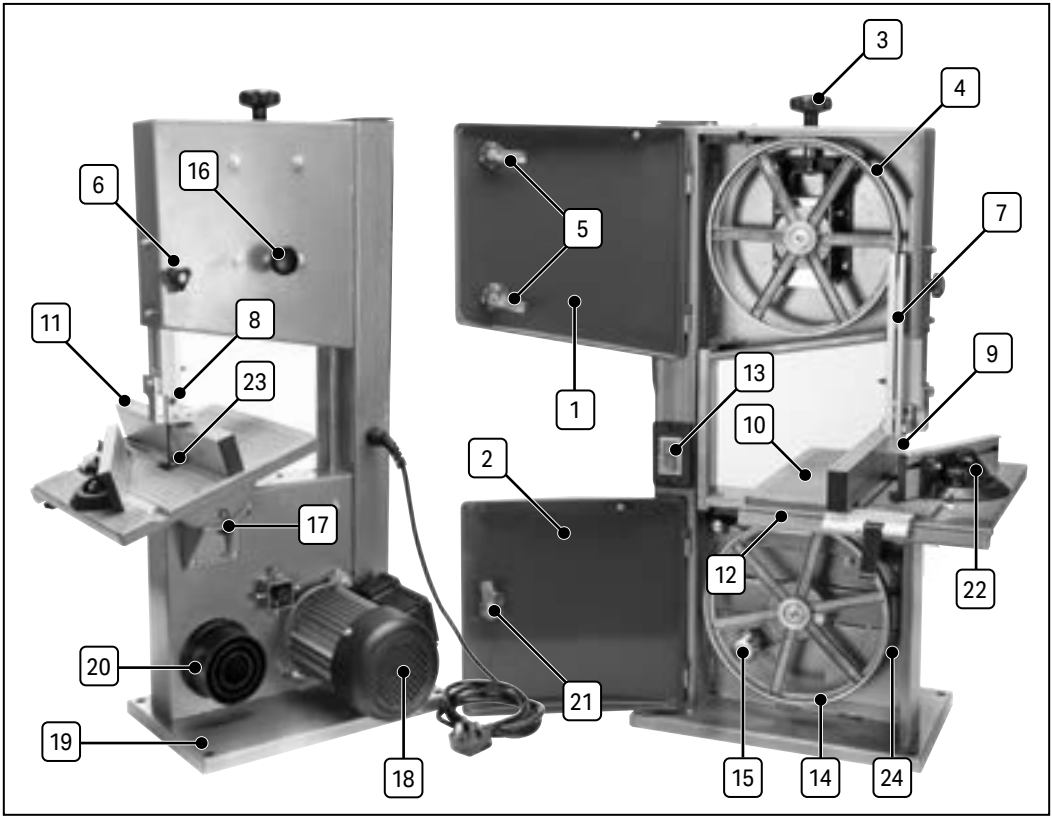

1 Upper door
2 Lower door
3 Saw band tensioner
4 Upper saw band wheel
5 Upper door latches
6 Blade guard adjustment
7 Blade guard
8 Upper blade guide
9 Saw band
10 Table
11 Rip fence
12 Rip fence rail
13 **NO-Volt/ON/OFF** switch
14 Lower saw band wheel
15 Drive belt
16 Saw band tracking knob
17 Table tilt (bevel) adjustment
18 Motor
19 Base
20 Dust extraction port
21 Lower door latches
22 Mitre guide
23 Table insert
24 Lower blade guide

5.2 What's in the Box?

Carefully remove the product from the packaging and examine it for any signs of damage that may have occurred during shipment.

Before assembling the product, lay the contents out and check them against the parts shown below. If any part is damaged or missing, **DO NOT** attempt to use the product. Please contact the Draper Helpline; contact details can be found at the back of this manual.

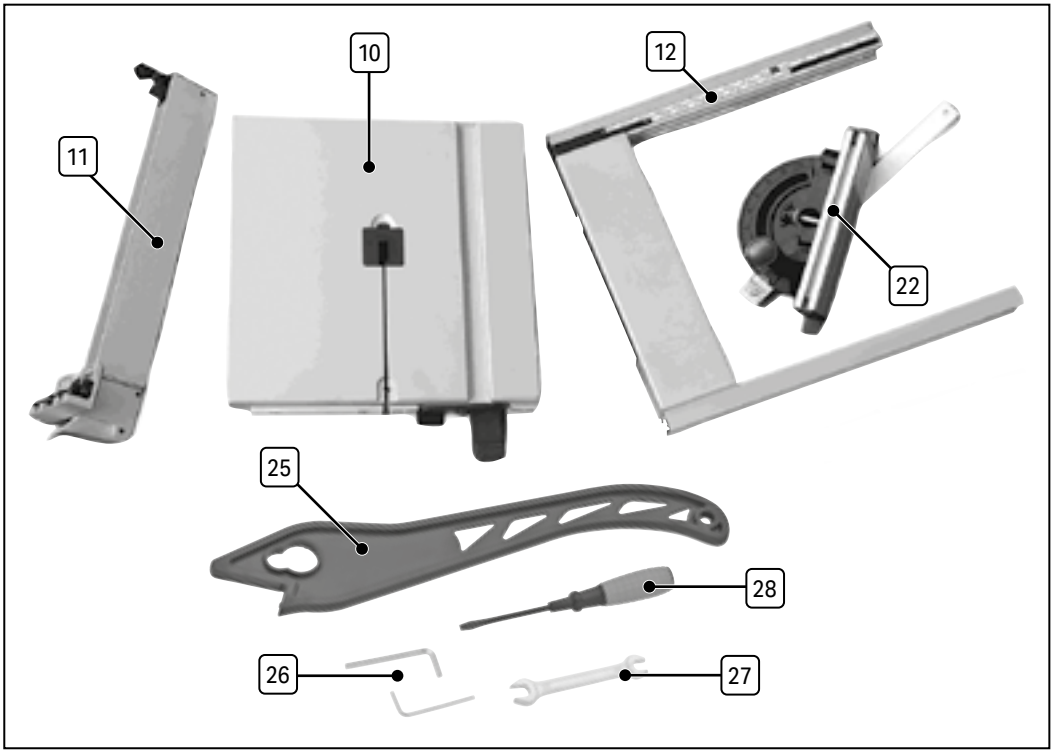

10 Table
11 Rip fence
12 Rip fence rail
22 Mitre guide
25 Push stick
26 2 × Hex keys (3 & 5mm)
27 1 × Open ended spanner
28 Plain slot screwdriver

5.3 Packaging

Keep the product packaging for the duration of the warranty period for reference should the product need to be returned for repair.

WARNING! Keep packaging materials out of reach of children. Dispose of packaging correctly and responsibly and in accordance with local regulations.

Please visit **drapertools.com** for our full range of accessories and consumables.

6. Preparation Instructions

Important: Before preparing or adjusting this product, read and understand all the safety instructions listed in this manual.

6.1 Installing the Table (Fig.1)

- Place the table 10 onto the table tilt adjustment 17 and align the hole underneath with the cradle. Secure with the plastic wing nut 17.1.

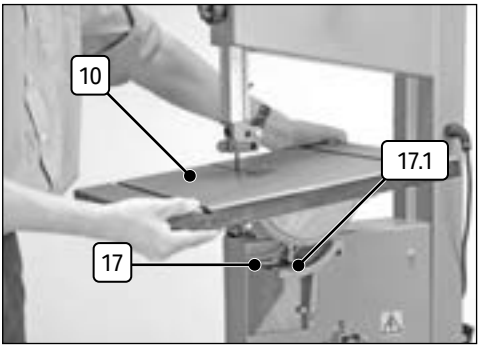

Fig. 1

6.2 Levelling the Table (Fig.2)

- The saw table can be tilted up to 45°.

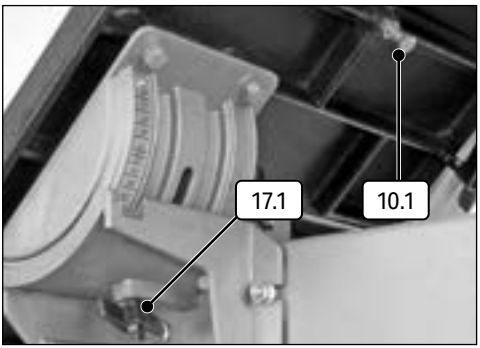

Fig. 2

1. To tilt, loosen the wing nut 17.1 on the cradle.
2. The stop 10.1 on the underside of the table rests on the lower wheel housing when the table is at 90° with the blade.
3. Loosen the locking nut and turn the bolt in or out, as required, to change angle against the saw band.
4. Use a spirit level to check the table is square.

6.3 Fitting the Rip Fence Rail (Fig.3)

1. Place the rip fence rail 12 on the front edge of the table.

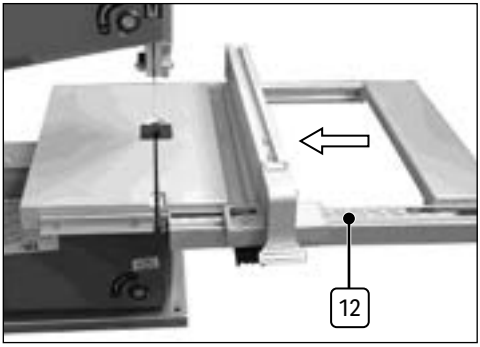

Fig. 3

2. Then slide into both channels until fully located.

6.4 Fitting the Rip Fence (Fig.4)

- Attach the rip fence 11 to the rip fence rail and press the clip 11.1 down to secure in place.

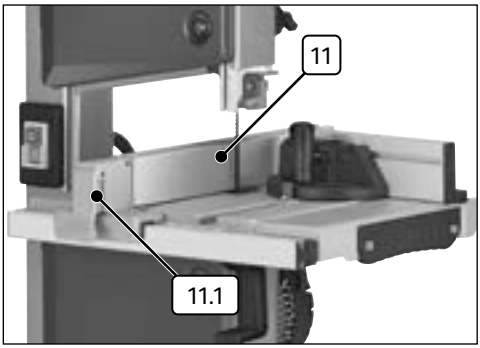

Fig. 4

7. Operating Instructions

Important: Before operating this product, read and understand all the safety instructions listed in this manual. Ensure that the product is fully assembled and correctly prepared for use.

7.1 ON/OFF Operation (Fig.5)

- The bandsaw is fitted with **No Volt/ON/OFF** switch 13 .

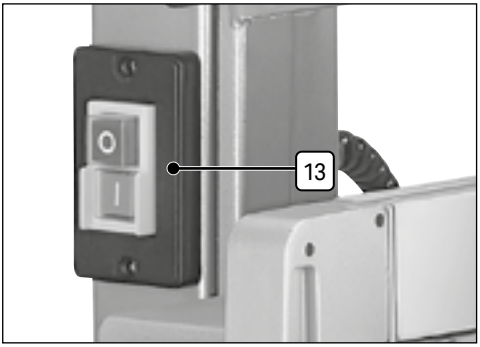

Fig. 5

- To switch the bandsaw on, push the green button marked 'I' **ON** .
- To switch the bandsaw off, push the red button marked 'O' **OFF**.
- In the event of a power failure the bandsaw will have to be manually re-started.

7.2 Tilting the Table (Fig.6)

1. Using the bevel indicator 10.4 as a guide the angle of the table can be adjusted between 0° and 45°.

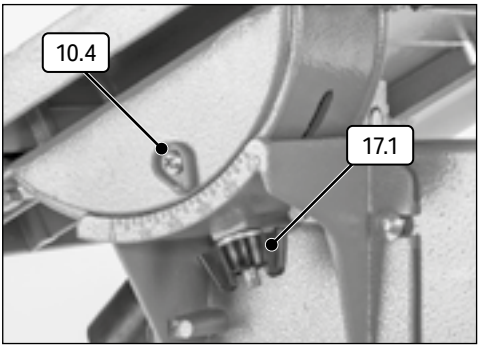

Fig. 6

2. To tilt, loosen the wing nut 17.1 . When set as require, tighten the wing nut to secure.

Note: When greater accuracy is required, make practice cuts on waste material and adjust the table as necessary.

7.3 Opening & Locking the Upper and Lower Doors (Fig.7)

- To open the doors - insert the plain slot screwdriver 28 into the upper door latches 5 and lower door latches 21 and rotate the latches until the door is released.

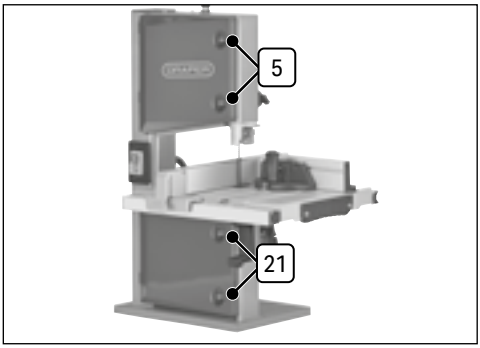

Fig. 7

- To lock the door - insert the screwdriver back into the slot and rotate the latches in the opposite direction.

WARNING! The bandsaw is fitted with a micro switch inside the upper door. This safety feature will de-activate the bandsaw when the door is open.

7.4 Blade Guard Slide Adjustment (Fig.8)

1. The blade guard 7 should be adjusted to within 3mm of the workpiece.

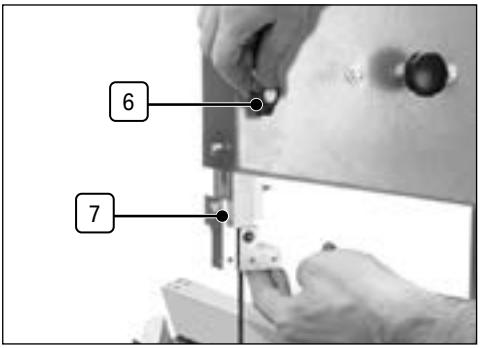

Fig. 8

2. **ALWAYS** adjust the blade guide assembly to suit the workpiece before each operation.
3. Loosen the blade guard adjustment 6 to raise or lower the guard. When complete, tighten to secure.

7.5 Tensioning the Saw Blade Band (Fig.9)

1. Turn the saw band tensioner 3 clockwise until the blade is tensioned.

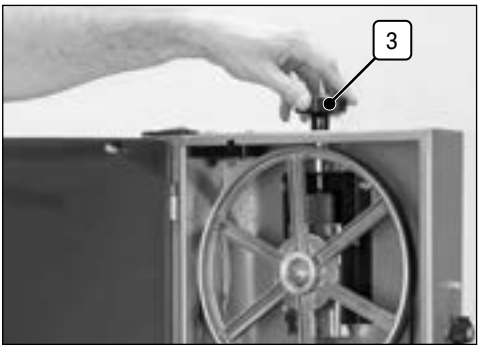

Fig. 9

2. The blade tension can be checked by pushing down on the blade band midway between the two wheels. When the tension is correct the blade should move slightly with firm finger pressure.

Note: DO NOT overtighten the blade.

- Too much tension may cause blade breakage.
- Too little tension may cause the blade to slip on the wheels.

7.6 Changing and Setting a New Blade Band (Fig.10 – Fig.11)

Important: Read the Health and safety section before changing the blade.

1. To change the saw blade band, remove the rip fence, slide off the rip fence rail and then remove the table.

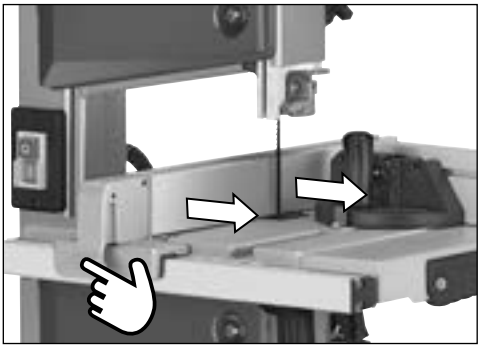

Fig. 10

2. Slacken the blade tension with the tensioner 3, open both doors and remove the blade band carefully.
3. Fit the new saw blade carefully (with the teeth facing down). When the saw band is located correctly through the guide and is sat centrally on the upper and lower wheels, operate the tensioner to re-engage the tension.

Fig. 11

4. As the tension has been released during this process, the tracking should be checked and adjusted **as per section 7.7.** The blade should run in the centre of the rubber lined bandsaw wheels otherwise it may jump off.

WARNING! Read the safety instructions and select a blade suitable for the intended material and use on this machine.

7.7 Blade Tracking Adjustment (Fig.12 – Fig.13)

Important: The blade tension must be correctly adjusted before setting the blade tracking.

1. Slowly turn the upper saw band wheel (4) clockwise by hand and watch the blade on the tyre.

Fig. 12

2. If the blade does not stay central on the tyre the tracking will have to be adjusted.

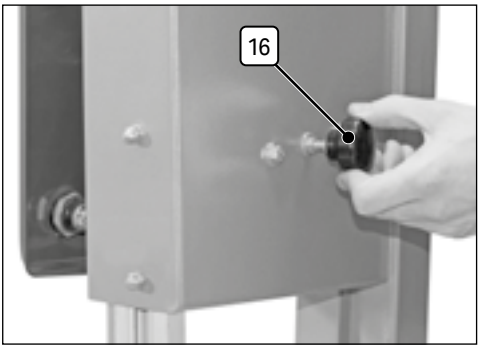

Fig. 13

- To adjust the upper wheel tracking:
  - Loosen the saw band tracking knob 16 clockwise If the blade runs towards the front of the saw.
  - Turn anticlockwise if the blade runs towards the rear of the saw.
  - Observe the reaction of the small adjustments on the blades tracking.

7.8 Upper Blade Guide Assembly Adjustment (Fig.14 – Fig.15)

- The upper blade guide 8 ensures an exact clean cut by keeping the blade central and firm on the cutting line.

1. Set the bearings of the upper blade guide to within approximately 0.15mm of the blade, and the thrust bearing at the back of the blade, just clear of it.

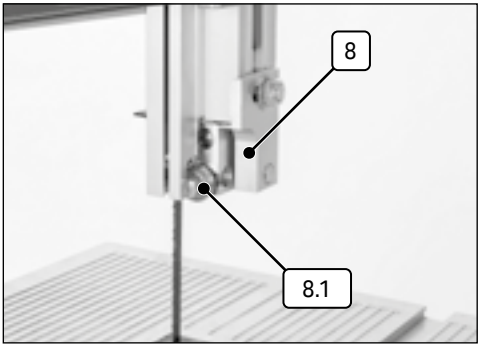

Fig. 14

- **DO NOT** set the bearing too close, as the friction generates heat, which may have an adverse effect on the bearings and the saw band as well.

2. To adjust: Loosen nut 8.1 to enable the two side bearing guides to be moved closer to the blade. When in position, retighten.

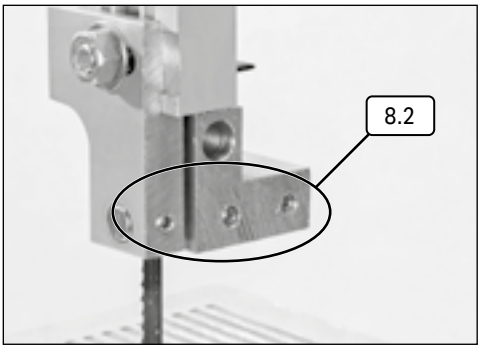

Fig. 15

3. Before operating the bandsaw, ensure the grub screws 8.2 are tight and that the guide is square.

7.9 Lower Blade Guide Adjustment (Fig.16)

- First open the lower door to make any adjustments to the lower blade guide 24.

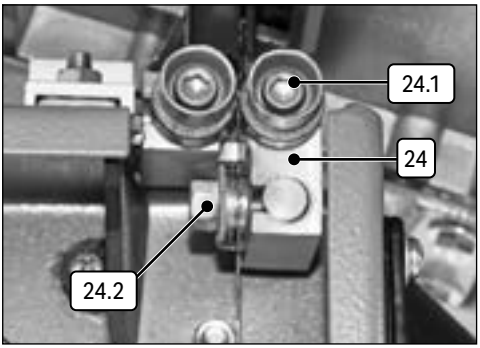

Fig. 16

- The two side bearings must be adjusted by loosening the socket hex. bolt 24.1 .
- The rear bearing guide can be adjusted by loosening the hex. bolt 24.2 .

WARNING! DO NOT start the bandsaw until all blade guides have been correctly adjusted and all locking screws and bolts are secure.

7.10 Mitre Guide (Fig.17)

- Most crosscut work, especially with small pieces is more easily controlled with the use of the mitre guide 22.

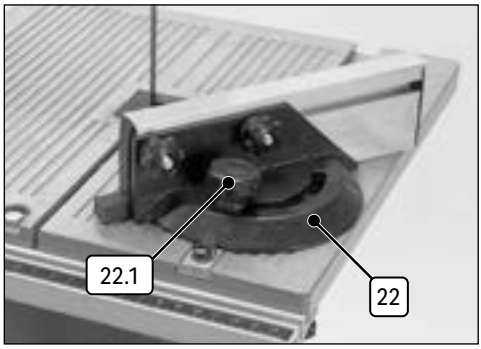

Fig. 17

- The guide is graduated to 45˚ for both left and right hand angles.
- Simply slide the guide into the channel provided in the worktable.
- To alter the angle, loosen knob 22.1 , set to desired angle and retighten.

Note: The scale on the mitre guide is for reference only.

8. Tips on using the Bandsaw

8.1 General Tips

- For all cutting operations the upper blade guide should be adjusted to just clear of the work being cut (3mm). Not only does this provide the best operator safety, but it also brings the blade guides closer to the work giving more accurate results and easier control.
- Use both hands to feed the workpiece to the blade. The work must **ALWAYS** be held flat on the table to prevent binding of the blade. Use a steady even pressure just sufficient to keep the blade cutting.
- **ALWAYS** use a rip fence or mitre guide where possible to eliminate any sideways slippage of the work. This is most important when the table is tilted to an angle.
- **ALWAYS** plan work ahead. It is best to finish a cut in one continuous operation, although frequent backtracking will be necessary. Turn off the motor and allow the blade to come to a complete stop before backing the blade out of the cut.
- Remember that the blade removes material during the cut. This gap created by the blade is called the kerf and must be allowed for when cutting to exact sizes. Plan your cut so that the kerf is to the scrap side of the line you wish to cut. If necessary, allow a little more for finish sanding.

8.2 Rip Sawing

- This term refers to the cutting of timber with the grain rather than at a right angle to the grain. You can rip wood freehand to a previously drawn line, but best results are obtained by using the rip fence. If the table is set at a level angle, set the rip fence to the left hand side of the blade. This allows you to use your right hand to hold the work firmly against the fence. The width of cut indicator on right hand side of the blade if the width of the workpiece allows it.

8. Tips on using the Bandsaw

- With the fence on the downhill side of the table, it will help support the work against slipping. The width cut indicator shows the distance between the blade and the rip fence.
- When cutting long pieces, consider making cuts from the waste edge up to the cut line, then the waste will fall away in small sections as you make the cut. The workpiece may need additional support to stop it from bending and causing the blade to bind, this can be achieved with a table at the correct height or an assistant, provided that they have been trained in the use of the machine and are aware of all safety implications.

8.3 Cross Cutting

- This term refers to cutting of timber at right angles to the grain. This type of cut can also be made freehand but use mitre guide to ensure accurate results. The mitre guide can be adjusted to a 45˚ angle to produce mitre cuts, or with the table tilted as well, compound mitre cuts.
- Ensure the work is held firmly against the table and against the face of the mitre guide. Take care to keep your fingers away from the blade, particularly at the end of the cut.

8.4 Freehand Sawing

- The ease with which many different and varied shapes can be cut is one of the most important features of the bandsaw. Select a blade suitable for cutting the smallest radius in the work you have planned.
- When freehand cutting **ALWAYS** feed the work slowly so that the blade can follow the line you wish to saw. Ensure not to drag the work offline forcing the blade sideways or twisting it.
- In many cases, it is helpful to rough cut about 6mm away from the line in difficult curves and corners. In the case of very sharp curves which may be too tight for the blade, make relief cuts onto the face of the curve so that these scraps will fall as the final radius is sawn.

9. Maintenance and Troubleshooting

Important: ALWAYS switch off and unplug the bandsaw before carrying out any adjustments, servicing or maintenance. Repairs should only be carried out by a qualified person.

9.1 General Maintenance

- Regular inspection and cleaning will reduce the necessity for maintenance operations and will keep your machine in good working condition.
- All bearings used in the construction of the bandsaw and motor are sealed and lubricated for life.
- Blade guides should be checked regularly for wear or damage and replaced if required. Replace both guides at the same time.
- Accumulated dust and chips should be removed from inside the bandsaw frequently. Open the front covers and use a brush or vacuum cleaner. At the end of every work session clean sawdust away from the motor vents.
- **DO NOT** use solvents or abrasive cleaners to clean the product.
- When not in use, store the product in a safe, dry place.

9.2 Changing Wheel Rubber Tyres

- Eventually the rubber tyres on the bandsaw wheels will wear due to the constant contact of the sharp teeth of the blade.
- Lift the edge of the tyre up with a small screwdriver and the tyre can be worked off the wheel easily. It is recommended to change the two tyres at the same time.

9. Maintenance and Troubleshooting

9.3 Troubleshooting

Problem	Possible cause	Remedy
Blades breaking.	Wrong Tension.	Adjust blade tension – **see section 7.5**
	Over worked blades.	Reduce feed rate.
	Wrong Blade application.	Use narrow blades for cutting thin materials or sharp curves.
		Use wide blades for thicker material or straight cuts.
	Blade twisting.	Avoid side pressure on the blade.
Bandsaw motor not operating.	Plug or cord damaged.	If the power supply cord is damaged, it must be replaced by Draper Tools, authorised service agent or a similarly qualified personnel in order to avoid a hazard.
	Motor issue.	Contact Draper Tools for advice.
Excessive vibrations.	Saw blade incorrectly mounted.	Refer to **section 7.6** for correct setting of blade.
	Unsuitable mounting surface.	Ensure bandsaw is secured to a suitable worksurface.
	Loose table.	Tighten table locking knob. Adjust table if necessary
	Loose motor mounting.	Tighten mounting screws.
Blade run out.	Blade guides not aligned.	Check blade guide settings are correct.

10. Spares, Returns and Disposal

For spare parts, servicing, and repair and replacement options, please contact the Draper Tools Product Helpline for details of your nearest authorised agent.

Draper Tools will endeavour to hold any spare parts, if applicable, for seven years from the date that it sells the final matching stock item.

Any servicing or repairs carried out by unauthorised personnel or installation of spare parts not supplied by Draper Tools will invalidate your warranty.

At the end of its working life, dispose of the product responsibly and in line with local regulations. Recycle where possible.

- **DO NOT** dispose of this product with domestic waste; most local authorities provide appropriate recycling facilities.

11. Warranty

24 months from date of purchase – Visit **drapertools.com/warranty** for more information. However, if the tools are hired out, the warranty period is 90 days from the date of purchase.

12. Explanation of Symbols

General Mandatory action required

Read the instruction manual

Wear ear defenders, mask and safety glasses

Warning!

Warning!
Risk of electric shock

WEEE –
Waste Electrical & Electronic Equipment
Do not dispose of Waste Electrical & Electronic Equipment in with domestic rubbish

Class 1/Earthed product

European conformity

UK Conformity Assessed

Notes

Notes

Contact Details

Draper Tools Limited
Hursley Road
Chandler's Ford
Eastleigh
Hampshire
SO53 1YF
UK

Draper Tools Europe B.V.
Oude Graaf 8
6002 NL
Weert
Netherlands

Website: drapertools.com
Email: sales@drapertools.com

Product Helpline: +44 (0) 23 8049 4344
Telephone Sales Desk: +44 (0) 23 8049 4333
General Enquiries: +44 (0) 23 8026 6355

Please contact the Draper Tools Product Helpline for repair and servicing enquiries.

© Published by Draper Tools Limited