230V

BELT SANDER

GB

58287 - BS75-1010D SPARE PARTS DRAWING

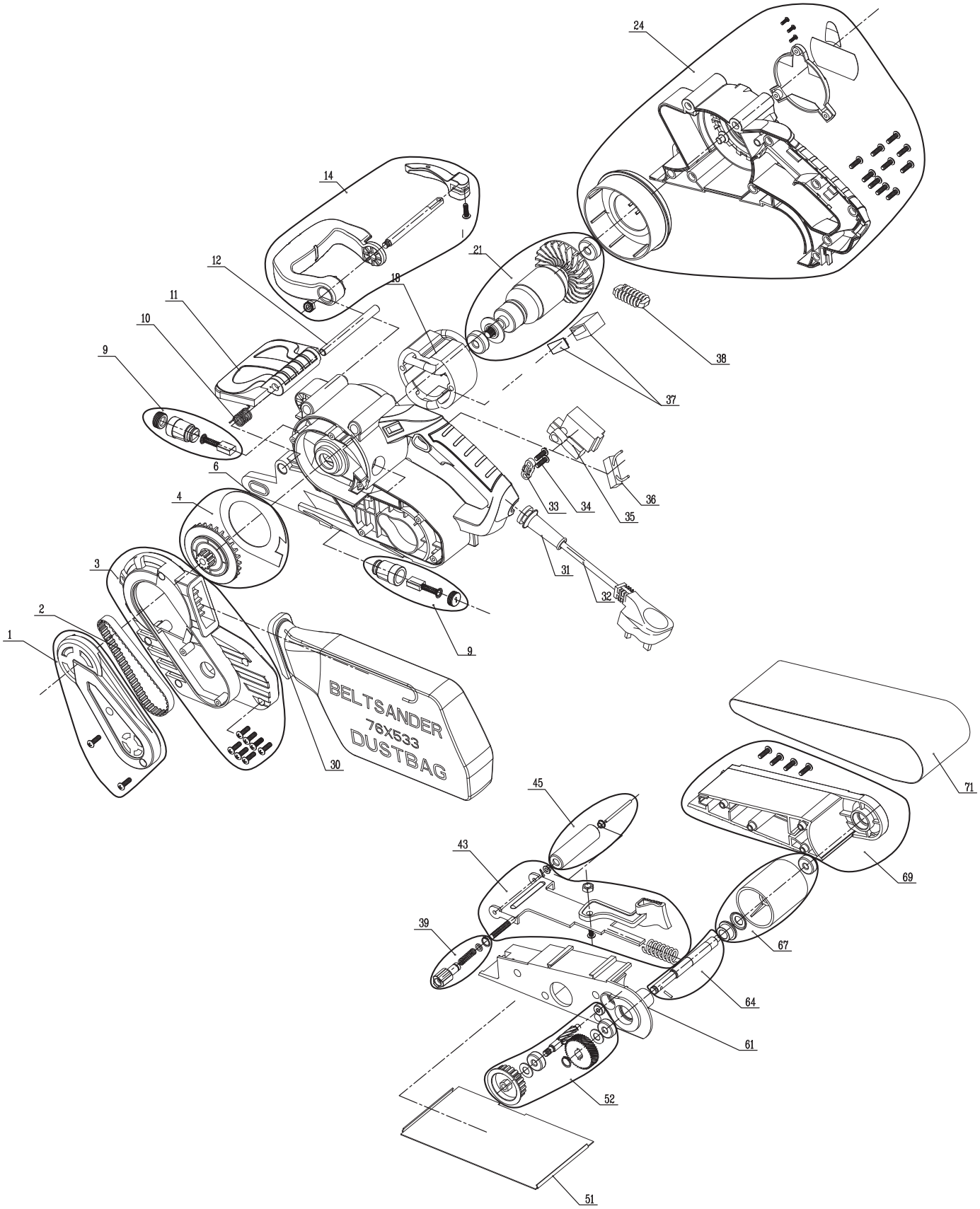

230V

BELT SANDER

GB

58287 - BS75-1010D SPARE PARTS LISTING

KEY No.	PART No.	STOCK No.	DESCRIPTION
1	YBS75-1010D-1	97314	Belt cover assembly
2	YBS75-1010D-2	97331	Synchronous belt
3	YBS75-1010D-3	97332	Middle cover assembly
4	YBS75-1010D-4	97333	Small pulley assembly
6	YBS75-1010D-6	97334	Left housing
9	YBS75-1010D-9	97335	Brush assembly (pair)
10	YBS75-1010D-10	97338	Torsion spring
11	YBS75-1010D-11	97340	Shaft plate
12	YBS75-1010D-12	97352	Rotation axis
14	YBS75-1010D-14	97496	Front handle assembly
18	YBS75-1010D-18	97497	Stator
21	YBS75-1010D-21	97498	Rotor assembly
24	YBS75-1010D-24	97500	Right housing assembly
30	YBS75-1010D-30	97501	Dust bag
31	YBS75-1010D-31	97502	Cable cover
32	YBS75-1010D-32	97507	Cable
33	YBS75-1010D-33	97508	Cable press
34	YBS75-1010D-34	97509	Screw ST4.2x16
35	YBS75-1010D-35	97511	Switch
36	YBS75-1010D-36	97512	Capacitor
37	YBS75-1010D-37	97517	Speed control switch assembly
38	YBS75-1010D-38	97518	Inductor
39	YBS75-1010D-39	97520	Adjust knob assembly
43	YBS75-1010D-43	97521	Front-wheel frame assembly
45	YBS75-1010D-45	97523	Front wheel assembly
51	YBS75-1010D-51	97525	Iron bottom
52	YBS75-1010D-52	97526	Gear & large pulley assembly
61	YBS75-1010D-61	97536	Aluminum base
64	YBS75-1010D-64	97537	Rear axle
67	YBS75-1010D-67	97538	Rear roller assembly
69	YBS75-1010D-69	97539	Plastic casing assembly
71			Sanding belt

KEY No.	PART No.	STOCK No.	DESCRIPTION

Helpline: +44 (0) 23 8049 4344 Sales Desk: +44 (0) 23 8049 4333 General Enquiries: +44 (0) 23 8026 6355 internet: drapertools.com email: sales@drapertools.com

Draper Tools Limited, Hursley Road, Chandler's Ford, Eastleigh, Hampshire. SO53 1YF UK.