160A MMA INVERTER WELDER

70030 – INV160A SPARE PARTS DRAWING

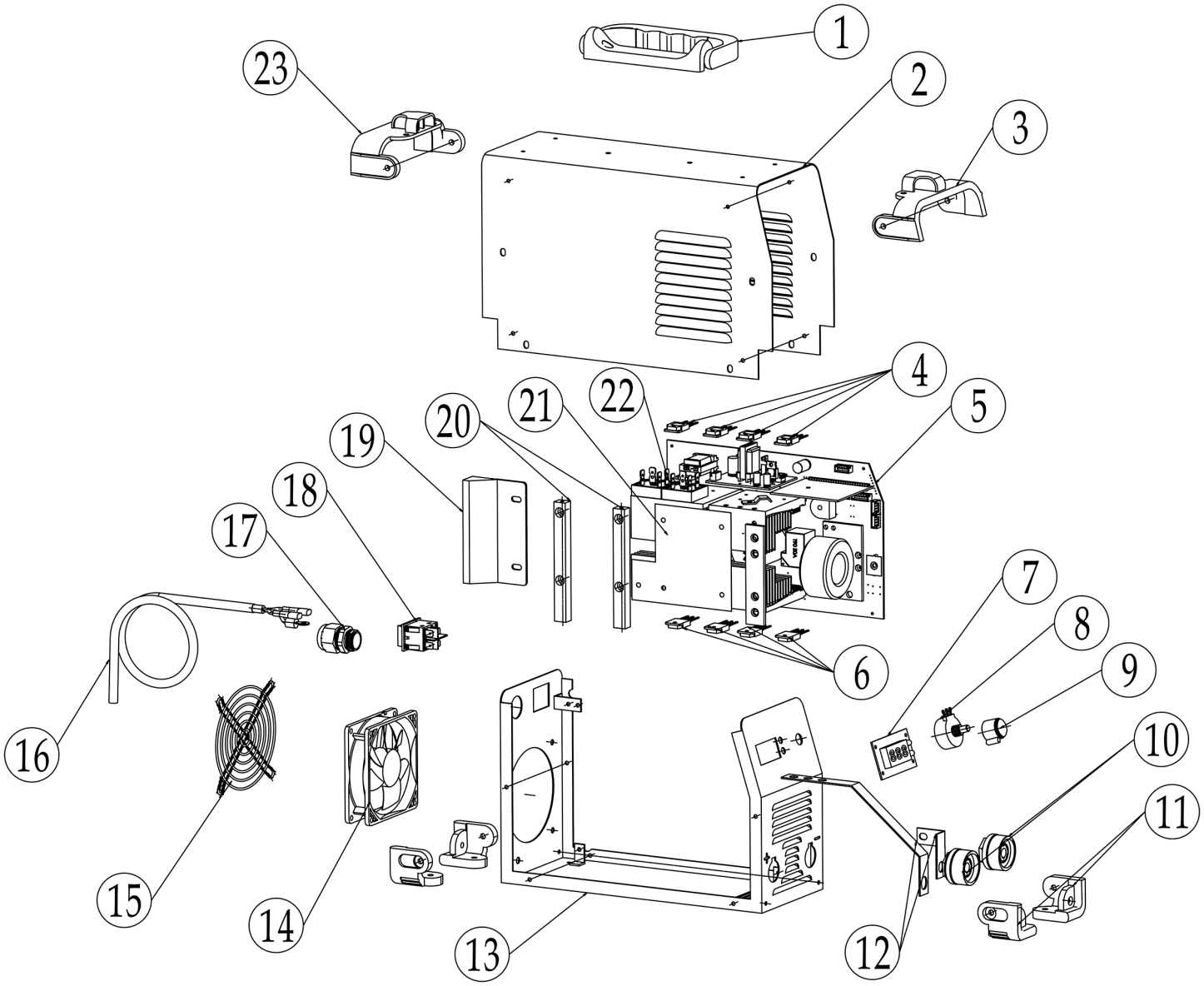

Helpline: +44 (0) 23 8049 4344 Sales Desk: +44 (0) 23 8049 4333 General Enquiries: +44 (0) 23 8026 6355 internet: drapertools.com email: sales@drapertools.com

Draper Tools Limited, Hursley Road, Chandler's Ford, Eastleigh, Hampshire. SO53 1YF UK.

160A MMA INVERTER WELDER

GB

70030 – INV160A SPARE PARTS LISTING

KEY No.	PART No.	STOCK No.	DESCRIPTION
1	YINV160A-1	94908	Handle
2			(NP) Casing
3			(NP) Front plastic piece
4	YINV160A-4A	94912	PCB Board Assembly
5			
6			
21			
22			
7	YINV160A-7	94913	Display meter
8	YINV160A-8	94914	Potentiometer
9	YINV160A-9	94915	Knob
10	YINV160A-10	94916	Quick coupling
11			(NP) Footing
12			(NP) Connecting bar
13			(NP) Baseplate
14	YINV160A-14	94922	Fan
15			(NP) Mesh
16			(NP) Power cable
17			(NP) Strain relief clamp
18	YINV160A-18	94934	Switch
19			(NP) Baffle
20			(NP) Support bar

KEY No.	PART No.	STOCK No.	DESCRIPTION

Helpline: +44 (0) 23 8049 4344 Sales Desk: +44 (0) 23 8049 4333 General Enquiries: +44 (0) 23 8026 6355 internet: drapertools.com email: sales@drapertools.com

Draper Tools Limited, Hursley Road, Chandler's Ford, Eastleigh, Hampshire. SO53 1YF UK.