GB

230V 228mm

BANDSAW

98446 – BS228/300D SPARE PARTS DRAWING

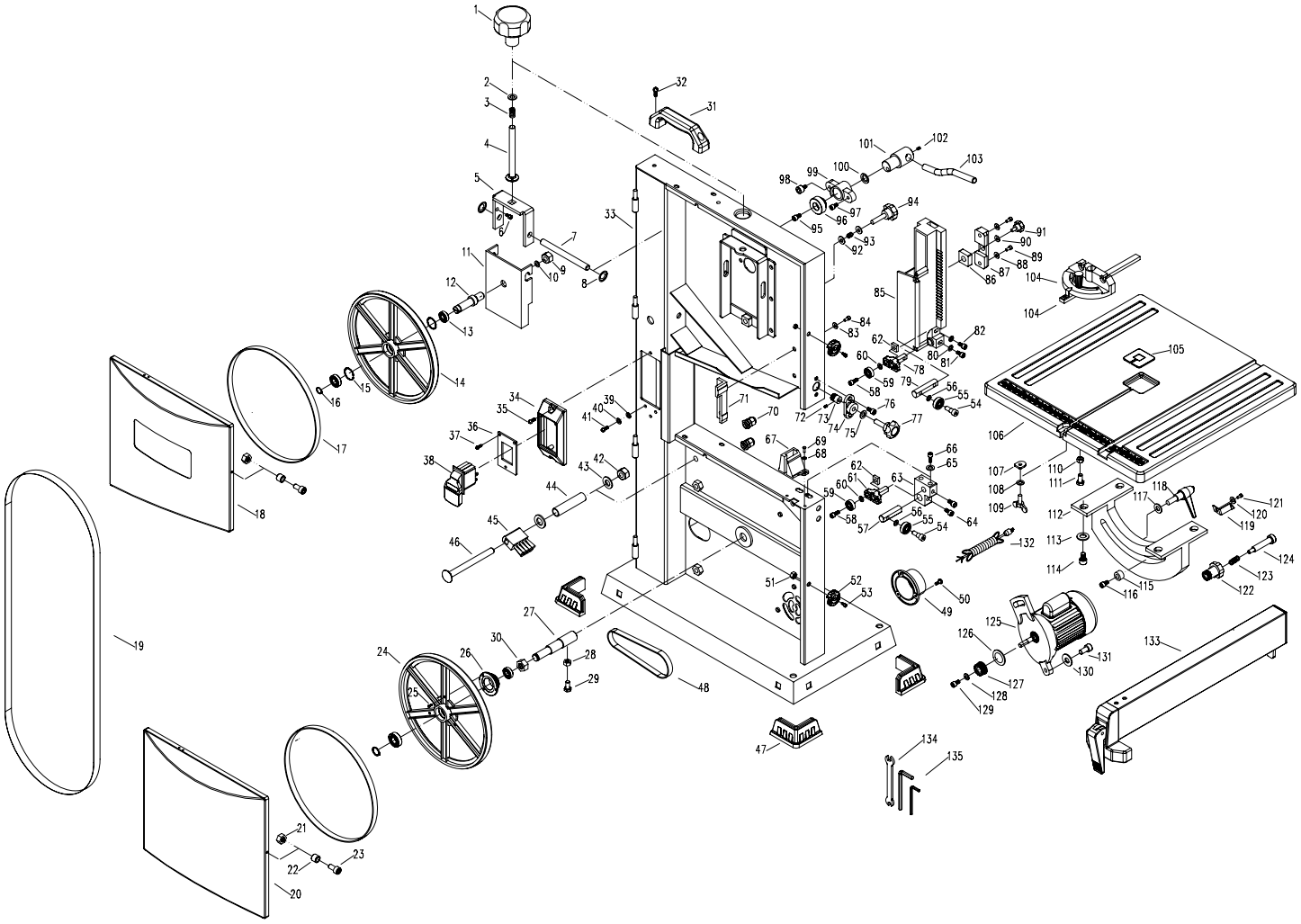

GB

230V 228mm

BANDSAW

98446 – BS228/300D SPARE PARTS LISTING

KEY No.	PART No.	STOCK No.	DESCRIPTION
1 – 4	YBS228/300D-01A	98558	Blade tension knob assembly
5 – 10	YBS228/300D-05A	98559	Pulling plate assembly
11	YBS228/300D-11	98561	Bevel support plate
12 & 16	YBS228/300D-12A	98562	Upper wheel shaft assembly
13 – 15 & 17	YBS228/300D-14A	98563	Upper wheel assembly
18			(NP) Upper wheel cover
19			Blade
20			(NP) Lower wheel cover
21 – 23	YBS228/300D-23A	98565	Door closure fittings assembly (pair)
13, 17 & 24 – 26	YBS228/300D-24A	98566	Lower wheel assembly
16 & 27 – 30	YBS228/300D-27A	98567	Lower wheel shaft assembly
31 & 32	YBS228/300D-31A	98637	Lifting handle assembly
33			(NP) Frame
34 – 38	YBS228/300D-34A	98569	Switch assembly
39			(NP) Lock washer 5mm
40			(NP) Serrate washer 5mm
41			(NP) Pan head screw M5-0.8X10
42 – 46	YBS228/300D-45A	98570	Brush assembly
47	YBS228/300D-47	98571	Foot (set of 4)
48	YBS228/300D-48	98572	Belt
49	YBS228/300D-49	98573	Dust port
50			(NP) Pan head screw M5-0.8X8
51			(NP) Lock nut M6-1.0mm
52 & 53	YBS228/300D-52A	98574	Catch knob assembly (set of 2)
54 – 66	YBS228/300D-61A	98575	Upper guide block assembly
54 – 56, 58 – 60, 62, 78 – 82 & 85	YBS228/300D-78A	98576	Upper guide block and protecting cover assembly
83			(NP) Flat washer 5mm
84			(NP) Socket head screw M5-0.8X10
67 – 69	YBS228/300D-67A	98577	Lower protecting cover assembly

KEY No.	PART No.	STOCK No.	DESCRIPTION
70			(NP) Strain relief
71			(NP) Guide plate
72 – 77	YBS228/300D-77A	98578	Adjustment knob assembly
86 – 91	YBS228/300D-91A	98583	Locking knob assembly
92 – 94	YBS228/300D-94A	98584	Tracking knob assembly
95			(NP) Socket head screw M6-1.0X16
96			(NP) Release block
97			(NP) Socked head screw M5-0.8X10
98			(NP) Limiting screw
99			(NP) Sleeve
100			(NP) Wave washer
101 – 103	YBS228/300D-103A	98588	Release handle assembly
104	YBS228/300D-104	98589	Mitre gauge assembly
105 – 116	YBS228/300D-106A	98596	Table assembly
117 & 118	YBS228/300D-118A	98597	Locking handle assembly
119 – 121	YBS228/300D-119A	98598	Pointer assembly
122 – 124	YBS228/300D-122A	98600	Table adjusting handle assembly
125 – 131	YBS228/300D-125A	98601	Motor assembly
132	YBS228/300D-132	98602	Power cord
133	YBS228/300D-133	98603	Fence assembly
134 & 135	YBS228/300D-134A	98604	Tool set assembly

Helpline: +44 (0) 23 8049 4344 Sales Desk: +44 (0) 23 8049 4333 General Enquiries: +44 (0) 23 8026 6355 internet: drapertools.com email: sales@drapertools.com

Draper Tools Limited, Hursley Road, Chandler's Ford, Eastleigh, Hampshire. SO53 1YF UK.