abode

Aquip

Wall Basin / Bath Mixer

Product features:

- Part G compliant 5 Litres / minute flow rate
- Modern minimalism with flair
- Wall mounting box for easier installation
- Cold start valve

Packaged properties:

Box length (mm): **Box depth(mm):**

Box width(mm): **Boxed weight (Kg):**

Includes pop up waste?: No

Additional comments:

Product dimensions:

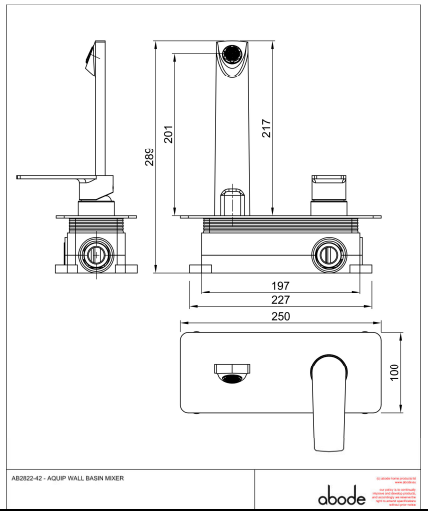

- **Product mounted where:** 0 mm
- **Recommended hole size:**
- **Overall Height / projection:** 220 mm
- **Exit reach:** 200 mm
- **Exit height:** 42 mm
- **Base size:** 251 x100 mm
- **Inlet centre distance(s):**
- **Min. fitting depth required:** 0 mm
- **Max. surface depth:** n/a

Product flow characteristics:

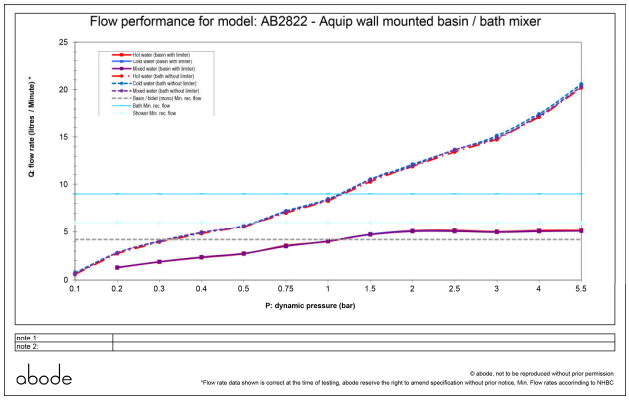

- **Min / Max water pressure (bar):** 0.40* / 5
  0.4 bar (basin without limiter).
  1 bar (basin with limiter).
  1.2 bar (bath with high flow aerator)
  flow rate varies depending on aerator install choice (high flow aerator supplied for bath filling for low supply pressures), see graph for details
- **Part G max. mixed flow rate at 3 bar (l/m):** 4.95
- **Inlet connection type / length:** N/a / 0 mm
- **Inlet (plumbing connection) / outlet size:** 1/2" F / n/a
- **Product flow characteristics:** Single flow
  Non return valve(s) supplied or position: no
- **Aerator type:** 5 L/M, honeycomb, swivel & flow straightener
- **Control valve type:** Single lever (35mm)

Warranty Summary (full details available on request):

- Materials and workmanship defects warranted for 5 years
- Valves and working parts warranted for 5 years
- Surface warranty defects warranted for 1 year
- O-rings, hoses & gaskets warranted for 1 year

Care instructions:

- Clean the mixers and showers regularly as required, using soap, do not use any other cleaners.
- Regular cleaning will prevent the build-up of lime scale and dirt
- After cleaning rinse thoroughly with clean water to remove any cleaner residue
- Residues of liquid soaps, shampoos and shower foams can also cause damage, so rinse with clean water after using, avoid contact with any abrasives