abode

# Uno
## Hand Shower Set

**Product features:**

- Metal & ABS construction
- Modern minimalism with flair
- 5 year limited warranty
- Rub clean anti limescale spray nozzles
- Luscious European quality chromium plate finish

**Packaged properties:**

**Box length (mm):** 260 **Box depth(mm):** 75

**Box width(mm):** 185 **Boxed weight (Kg):** 0.00

**Includes pop up waste?:** N/a

**Additional comments:**

N/a

**Product dimensions:**

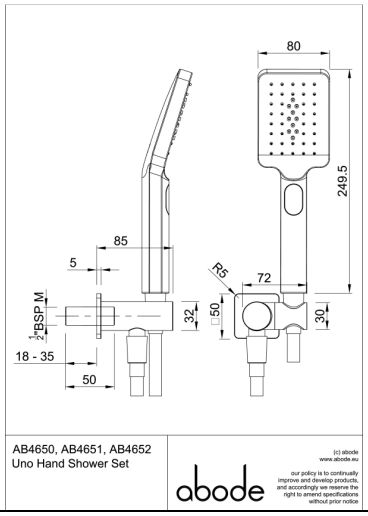


- **Product mounted where:** 0 mm
- **Recommended hole size:**
- **Overall Height / projection:** 85 mm
- **Exit reach:** 0 mm
- **Exit height:** 0 mm
- **Base size:** 50 mm
- **Inlet centre distance(s):** n/a mm
- **Min. fitting depth required:** 0 mm
- **Max. surface depth:** n/a

**Product flow characteristics:**

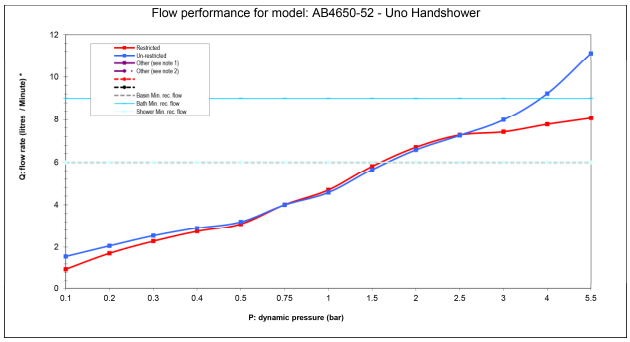


- **Min / Max water pressure (bar):** * / 5
- **Part G max. mixed flow rate at 3 bar (l/m):**
- **Inlet connection type / length:** Fixed / 0 mm
- **Inlet (plumbing connection) / outlet size:** 1/2" M / 1/2" M
- **Product flow characteristics:** N/a
  **Non return valve(s) supplied or position:** No
- **Aerator type:** N/a
- **Control valve type:** N/a (n/a)
- **Includes output diverter?:** No
- **Inlet meshed particle filters included:** n/a
- **Shower hose type / length:** PVC Hose / 1.20 m

**Warranty Summary** (full details available on request):

- Materials and workmanship defects warranted for 5 years
- Valves and working parts warranted for 5 years
- Surface warranty defects warranted for 1 year
- O-rings, hoses & gaskets warranted for 1 year

**Care instructions:**

- Clean the mixers and showers regularly as required, using soap, do not use any other cleaners.
- Regular cleaning will prevent the build-up of lime scale and dirt
- After cleaning rinse thoroughly with clean water to remove any cleaner residue
- Residues of liquid soaps, shampoos and shower foams can also cause damage, so rinse with clean water after using, avoid contact with any abrasives