Precautions

Installation Notes

- Install in accordance with all local wiring regulations and building regulations.
- This product must be installed and serviced by a qualified professional.

IMPORTANT

- Please read prior to installation.
- Please read these instructions carefully before commencing any work.
- Please retain these instructions for future reference.

Electrical

- Switch the power off at the mains supply before installing or maintaining this fitting.
- Ensure others cannot restore the electrical power supply without your knowledge.
- Only install compatible constant voltage LED fixtures and controls. 12V products should be used with a 12V driver and 24V products should be used with a 24V driver. Contact technical support or visit the product page for compatible products.
- Connect products with correct polarity. The positive cable (+) should be connected to the positive terminal on the driver. The negative cable (-) should be connected to the negative terminal on the driver.
- Do not wire output (SEC) to the mains supply.
- Ensure that the power capacity of the LED driver is greater than the total load of all the connected products.
- Ensure appropriate cables are installed between driver, fixtures, and any controllers. When choosing cable, factor in voltage drop, current rating and type. Inadequate cables could overheat and cause a fire.
- The maximum length of output cable to the light source should not exceed 2 metres to meet EMC standard.
- Minimum distance between plug top and driver must not be less than 1.5 metres.
- Do not install if the product has visible damage.
- Do not modify or disassemble the product beyond instructions or the warranty will be void.

Mechanical

- The driver will generate heat during use. It should be installed in a well ventilated location free from explosive gases and vapours and mounted to a surface that will dissipate this heat i.e. metal, not wood or plastic.
- The driver should be fixed to a surface using fixing points.
- Protect the driver from mechanical damage. Take care not to dislodge any components during installation. Ensure that cables connected to the driver cannot be pulled and are secured to provide strain relief.

Environmental

- The product should only be used in an environment with an ambient temperature between -20°C to +40°C.
- The temperature of the LED driver should never exceed 80°C when in operation.
- IP20 drivers are not waterproof and can only be installed indoors and with humidity of no more than 55%.
- IP67 drivers are suitable for indoor and outdoor installation.
- Install in a location without chemicals like sulphur, acid and halogen present.
- Avoid direct exposure to sunlight and protect cables from UV rays with suitable silicone sheath.

Product Warranty

1. A warranty period is provided for products in normal use. For any faults arising during the period that are confirmed to be quality related by inspection by the company, a product of the same specification will be replaced for free.
2. The warranty does not cover any of the following:

   (1) Any product damage due to usage not allowed in the instructions.
   (2) Any product damage due to disassembling or wrong operation by the user.
   (3) Severe appearence damage or deformation of the product.

CLASS II Professional LED Drivers

tagra®

▶ 24V Constant Voltage

User Manual

Applies to 24V CLASS II Tagra® power supplies.

List of SKU's

SKU	Dimensions	Mounting Points (F1 x F2)
TAG24V15WB	L 101mm x W 39.5mm x H 19.5mm	89mm x 32.1mm
TAG24V30WB	L 123mm x W 44.6mm x H 19.2mm	115.9mm x 13.6mm
TAG24V60WB	L 170mm x W 44.5mm x H 28.2mm	160.4mm x 40.6mm
TAG24V75W-SB	L 170mm x W 44.5mm x H 28.2mm	160.4mm x 40.6mm
TAG24V100W-S	L 170mm x W 44.5mm x H 28.2mm	160.4mm x 40.6mm
TAG24V150W-S	L 179.4mm x W 62.5mm x H 30.6mm	168.8mm x 56.2mm
TAGTHIN24V60W	L 304.6mm x W 30mm x H 16.7mm	298.2mm x 26.8mm
TAGTHIN24V100W	L 320.6mm x W 30mm x H 18.2mm	312.2mm x 26.8mm
TAGTHIN24V200W	L 356.4mm x W 32.1mm x H 22.3mm	347.1mm x 28.6mm
TAG24V200WB	L 195mm x W 67.1mm x H 31.2mm	182.8mm x 62.2mm
TAG24V320WB	L 215mm x W 77.5mm x H 35mm	201.7mm x 70.9mm
TAGTRIAC24V30W-V2	L 158mm x W 45.8mm x H18.3mm	141.8mm x 41.2mm
TAGTRIAC24V50W-V2	L 177mm x W 57.8mm x H 21.8mm	158.8mm x 53.2mm
TAGTRIAC24V75W	L 170.4mm x W 56.5mm x H 31mm	160.1mm x 51mm
TAGTRIAC24V100W	L 200.8mm x W 63mm x H 30mm	195.1mm x 20.3mm
TAGTRIAC24V150W	L 195mm x W 67.1mm x H 31.2mm	182.8mm x 62.2mm

WARNING
Shock hazard. May result in serious injury or death. Isolate supply before installation. Complete electrical safety checks before comissioning. Inspect regularly in accordance with local regulations

WARNING
Risk of fire. Ensure correct cable sizing, over-current protection, ventilation and keep away from combustible materials.

v2

Mounting Location

Plan View

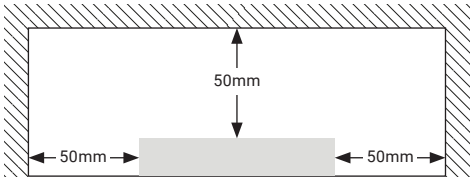

Top View

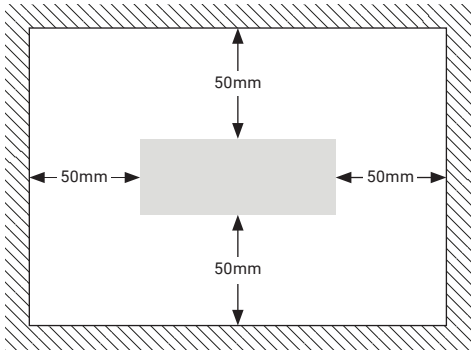

The driver will generate heat during use. It should be installed in a well ventilated location free from explosive gases and vapours and mounted to a surface that will dissipate this heat e.g. metal, not wood or plastic.

Wiring Diagram

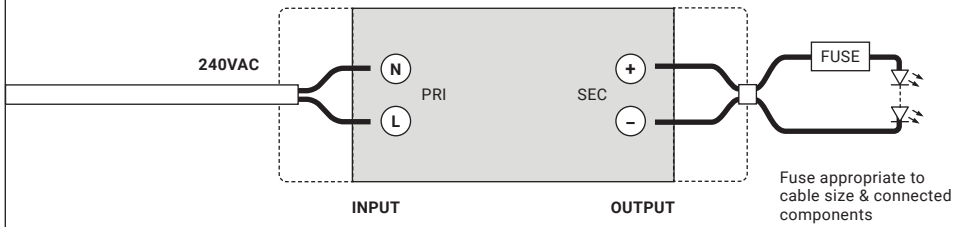

Applies to SKU Codes:				
TAG24V15WB	TAG24V75W-SB	TAGTHIN24V100W	TAG24V200WB	
TAG24V30WB	TAG24V100W-S	TAGTHIN24V200W	TAG24V320WB	
TAG24V60WB	TAGTHIN24V60W	TAG24V150W-S		

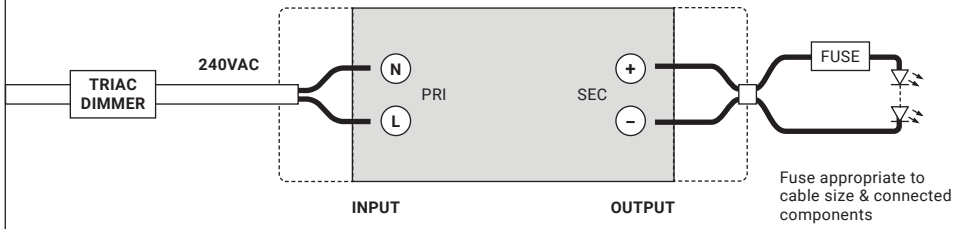

Applies to SKU Codes:				
TAGTRIAC24V30W-V2	TAGTRIAC24V75W	TAGTRIAC24V150W		
TAGTRIAC24V50W-V2	TAGTRIAC24V100W			

Installation

Refer to the “Electrical” section listed in the precautions.
Ensure all components compatible. Configure and pre-test system prior to permanent installation.

1. Unscrew and remove the covers from the driver.
2. Connect LED system on the output (SEC) side of the driver . Check polarity.
3. Connect the mains supply wires on the input (PRI) side of the driver. Check polarity.
4. Replace the covers and screw down ensuring cables are firmly clamped.
5. Complete electrical safety checks.

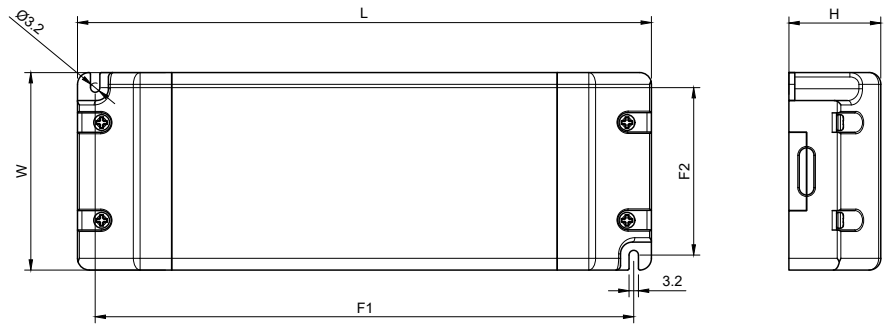

Cable Specification

	OUTPUT	INPUT
SKU	**Cross-section of conductors for terminals**	**Cross-section of conductors for terminals**
TAG24V15WB	H03VVH2-F 2×0.75mm²	H03VVH2-F 2×0.75mm²
TAG24V30WB	H03VVH2-F 2×0.75mm²	H03VVH2-F 2×0.75mm²
TAG24V60WB	H03VVH2-F 2×0.75mm²	H03VVH2-F 2×0.75mm²
TAG24V75W-SB	H03VVH2-F 2×0.75mm²	H03VVH2-F 2×0.75mm²
TAG24V100W-S	H05VVH2-F 2×1.0mm²	H03VVH2-F 2×0.75mm²
TAG24V150W-S	H05VVH2-F 2×1.0mm²	H03VVH2-F 2×0.75mm²
TAGTHIN24V60W	H05VVH2-F 2×1.0mm²	H03VVH2-F 2×0.75mm²
TAGTHIN24V100W	H05VVH2-F 2×1.0mm²	H03VVH2-F 2×0.75mm²
TAGTHIN24V200W	H05VVH2-F 2×1.0mm²	H05VVH2-F 2×0.75mm²
TAG24V200WB	H05VVH2-F 2×1.0mm²	H05VVH2-F 2×1.0mm²
TAG24V320WB	H05VVH2-F 2×1.0mm²	H03VVH2-F 2×0.75mm²
TAGTRIAC24V30W-V2	H03VVH2-F 2×0.75mm²	H03VVH2-F 2×0.75mm²
TAGTRIAC24V50W-V2	H03VVH2-F 2×0.75mm²	H03VVH2-F 2×0.75mm²
TAGTRIAC24V75W	H05VVH2-F 2×1.0mm²	H03VVH2-F 2×0.75mm²
TAGTRIAC24V100W	H05VVH2-F 2×1.0mm²	H05VVH2-F 2×1.0mm²
TAGTRIAC24V150W	H05VVH2-F 2×1.0mm²	H05VVH2-F 2×1.0mm²