T11-1, T12-1, T13-1, T14-1, T15-1

RF DIM/CCT/RGB/RGBW/RGB+CCT

Wall Mounted Touch Panel

4 Zone / 1-5 color / Glass touch panel / Color slide / AC input / DMX 512 and RF 2.4G signal output

T11-1 T12-1 T13-1 T14-1 T15-1

- Touch panel 4 zone 1-5 color DMX512 master, can also be used as 4 zone 1-5 color RF remote.
- DMX signal output, comply to standard DMX512 protocol, compatible with DMX decoder from any supplier.
- When used as RF remote, each zone can remote control multiple RF 2.4G LED controllers.
- Ultra sensitive high strength glass touch panel with touch color slide in the middle.
- Smooth and accurate color adjustment by touching the color slide.
- Touch keys with LED indicator.
- White & Black glass panel available.

CE RoHS emc LVD RED

Technical Parameters

Model No.	T11-1	T12-1	T13-1	T14-1	T15-1
Light type	Single color	Dual color	RGB	RGBW	RGB+CCT
Output DMX channel number	4	8	12	16	20

Input and Output	
Input voltage	100-240VAC
Input current	Max 0.1A
Output signal	DMX512, RF 2.4GHz
Package	
Size	L112 x W112 x H50mm
Gross weight	0.230kg

Dimming data	
Input signal	Touch key + RF 2.4GHz
RF Control distance	10m(Barrier-free space)
Dimming level	256 levels
Dimming range	0-100%
Warranty	
Warranty	5 years

Safety and EMC	
EMC standard (EMC)	ETSI EN 301 489-1 V2.2.3 ETSI EN 301 489-17 V3.2.4
Safety standard(LVD)	EN 62368-1:2020+A11:2020
Radio Equipment(RED)	ETSI EN 300 328 V2.2.2
Certification	CE,EMC,LVD,RED
Environment	
Operation temperature	Ta: -30°C ~ +55°C
Case temperature (Max.)	Tc: +65°C
IP rating	IP20

Mechanical Structures and Installations

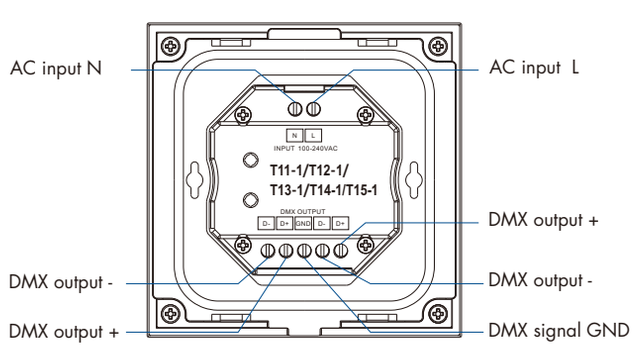

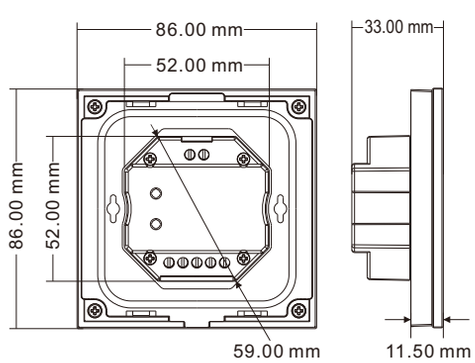

Installation diagram:

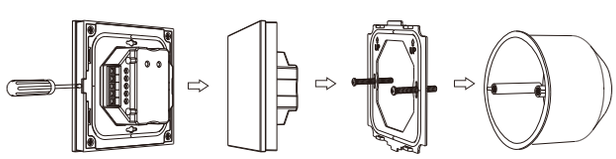

Uninstall Touch panel Baseplate Base

Typical base as below:

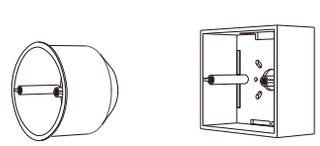

European style 86 size

Key function

• T11-1 Single color panel

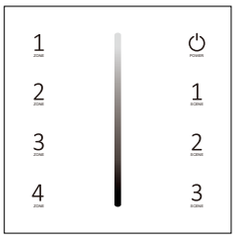

Power —— Turn on/off all zone light.

—— Brightness slide.

1 Scene 2 Scene 3 Scene —— Short press recall scene. Long press 2s to save the current state into 1/2/3.

1 Zone 2 Zone 3 Zone 4 Zone

Short press turn on zone light and select zone simultaneously, long press 2s turn off zone light.
4 zone control seperately or synchronously, each zone could control multiple receivers.

• T12-1 Dual color panel

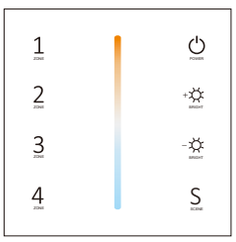

Power —— Turn on/off all zone light.

—— Color temperature.

+ —— Brightness +, 10 levels.

- —— Brightness -, 10 levels.

S —— Short press recall scene. Long press 2s to save the current state into the scene.

1 Zone 2 Zone 3 Zone 4 Zone

Short press turn on zone light and select zone simultaneously, long press 2s turn off zone light.
4 zone control seperately or synchronously, each zone could control multiple receivers.

• T13-1 RGB panel

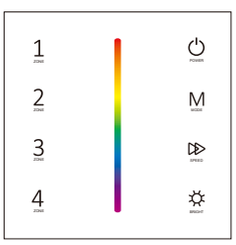

Power —— Turn on/off all zone light.

—— Color slide.

M Mode —— Short press play 10 built-in dynamic mode, long press 2s run mode-cycle.

Speed —— Adjust dynamic mode speed or RGB color saturation, 10 levels.

Bright —— Adjust brightness, 10 levels.

1 Zone 2 Zone 3 Zone 4 Zone

Short press turn on zone light and select zone simultaneously, long press 2s turn off zone light.
4 zone control seperately or synchronously, each zone could control multiple receivers.

• T14-1 RGBW panel

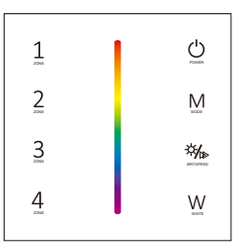

Power —— Turn on/off all zone light.

—— Color slide.

M Mode —— Short press play 10 built-in dynamic mode, long press 2s run mode-cycle.

Brt/Speed —— Adjust dynamic mode speed or static color brightness, 10 levels.

W White —— Short press get white color, long press adjust white brightness.

1 Zone 2 Zone 3 Zone 4 Zone

Short press turn on zone light and select zone simultaneously, long press 2s turn off zone light.
4 zone control seperately or synchronously, each zone could control multiple receivers.

• T15-1 RGB+CCT panel

Power —— Turn on/off all zone light.

—— RGB color / Color temperature slide.

SWITCH —— Switch between RGB color / Color temperature slide.

M Mode —— Short press play 10 built-in dynamic mode, long press 2s run mode-cycle.

Brt/Speed —— Adjust dynamic mode speed or static color brightness, 10 levels.

1 Zone 2 Zone 3 Zone 4 Zone

Short press turn on zone light and select zone simultaneously, long press 2s turn off zone light.
4 zone control seperately or synchronously, each zone could control multiple receivers.

Turn on key tone: Long press power key for 5s when all zone light is off, will turn on or turn off key tone.

Touch Panel work as DMX512 Master

After connect with DMX decoders, please set the DMX decoders address as below:

Model No.	T11-1	T12-1		T13-1			T14-1				T15-1				
		WW	CW	R	G	B	R	G	B	W	R	G	B	WW	CW
Zone 1 DMX decoder's address	1	1	2	1	2	3	1	2	3	4	1	2	3	4	5
Zone 2 DMX decoder's address	2	3	4	4	5	6	5	6	7	8	6	7	8	9	10
Zone 3 DMX decoder's address	3	5	6	7	8	9	9	10	11	12	11	12	13	14	15
Zone 4 DMX decoder's address	4	7	8	10	11	12	13	14	15	16	16	17	18	19	20

Wiring Diagram for touch panel work as DMX512 master

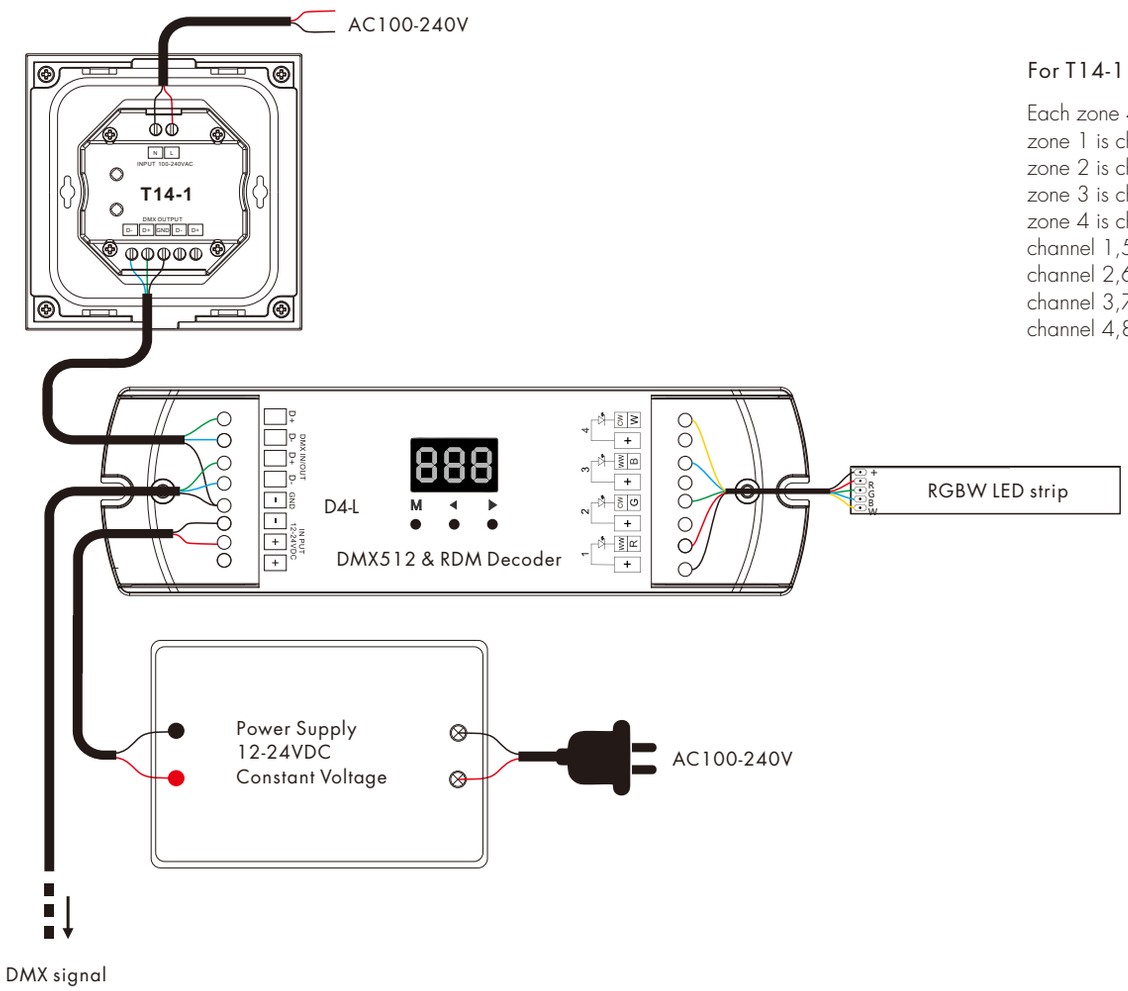

For T14-1 RGBW panel

Each zone 4 channel:
zone 1 is channel 1 ~ 4,
zone 2 is channel 5 ~ 8,
zone 3 is channel 9 ~ 12,
zone 4 is channel 13 ~ 16,
channel 1,5,9,13 is R,
channel 2,6,10,14 is G,
channel 3,7,11,15 is B,
channel 4,8,12,16 is W.

Touch Panel work as DMX512 master match RF remote

Touch panel 4 zone DMX512 master can also match with 4 zone RF remote (Optional).
End user can choose the suitable match/delete ways. Two options are offered for selection:

Use On/Off key

Match:
Turn on light, turn off, immediately press the On/Off key of the panel for 5s, then press any zone key of the RF remote within 5s.
The LED indicator fast flash 3 times means match is successful.

Delete:
Turn on light, turn off, immediately press the On/Off key of the panel for 10s to delete all match,
The LED indicator fast flash 6 times means all matched remotes were deleted.

Use Power Restart

Match:
Switch off the power of the panel, then switch on power, repeat again.
Immediately short press any zone key 3 times on the remote.
The LED indicator fast flash 3 times means match is successful.

Delete:
Switch off the power of the panel, then switch on power, repeat again.
Immediately short press any zone key 5 times on the remote.
The LED indicator fast flash 6 times means all matched remotes were deleted.

Touch Panel work as RF remote

Touch panel 4 zone remote can match with RF controller for the corresponding light type.
End user can choose the suitable match/delete ways. Two options are offered for selection:

Use the controller's Match key

Match:
Short press match key, immediately press zone key of the touch panel.
The LED indicator fast flash a few times means match is successful.

Delete:
Press and hold match key for 5s to delete all match,
The LED indicator fast flash a few times
means all matched remotes were deleted.

Use Power Restart

Match:
Switch off the power of the receiver, then switch on power, repeat again.
Immediately short press zone key 3 times on the touch panel.
The light blinks 3 times means match is successful.

Delete:
Switch off the power of the receiver, then switch on power, repeat again.
Immediately short press zone key 5 times on the touch panel.
The light blinks 5 times means all matched remotes were deleted.

Wiring Diagram for touch panel work as RF remote

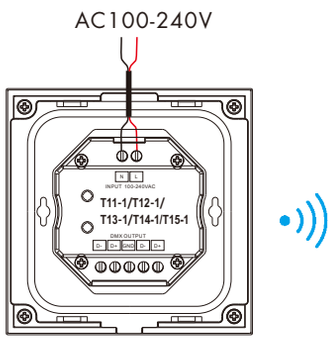

RGB/RGBW dynamic mode list (only for T13-1 / T14-1)

No.	Name	No.	Name
1	RGB jump	6	RGB fade in and out
2	RGB smooth	7	Red fade in and out
3	6 color jump	8	Green fade in and out
4	6 color smooth	9	Blue fade in and out
5	Yellow cyan purple smooth	10	White fade in and out

RGB+CCT dynamic mode list (only for T15-1)

No.	Name	No.	Name
1	RGB jump	6	RGB fade in and out
2	RGB smooth	7	Red fade in and out
3	6 color jump	8	Green fade in and out
4	6 color smooth	9	Blue fade in and out
5	Color temperature smooth	10	White fade in and out

Malfunctions analysis & troubleshooting

Malfunctions	Causes	Troubleshooting
No light	1. No power. 2. Wrong connection or insecure.	1. Check the power. 2. Check the connection.
Wrong color	1. DMX decoder first address error. 2. Wrong connection of output wires.	1. Check the DMX first address. 2. Reconnect output wires.