ID-AGFCCT

Key Features

Mounting Type: Recessed

Product height (mm): 53mm

Lm (Total): 600Lm

CRI: 90+

IP Rating: 65

CCT Switchable: 2700K, 3000K, 4000K, 6500K

Warranty: 5 Year(s)

Wattage Switchable: 4W & 6W

Cut-out Diameter: 70mm

TRIAC | >90 CRI | IP65

Mechanical Data

Body Colour	White
LED Chip Brand	MTC
LED Chip Type	SMD 2835
Cut Out Diameter	70 mm
Diffuser Material	PC
Entry Cable Direction	Rear
LED Module Replaceable	No
Product Weight	190 g
Suspension Kit Included	No

Ultra LEDs have taken reasonable care to ensure that the information in this datasheet is accurate at time of publication however it should be noted that all specifications are subject to tolerance. Descriptive specifications such as colour are subjective. Ultra LEDs reserve the right to update specifications without notice. The information in the datasheet may only be relied on by customers of Ultra LEDs in accordance with applicable terms and conditions

Product Dimensions	86x86x53 mm

Dimensions

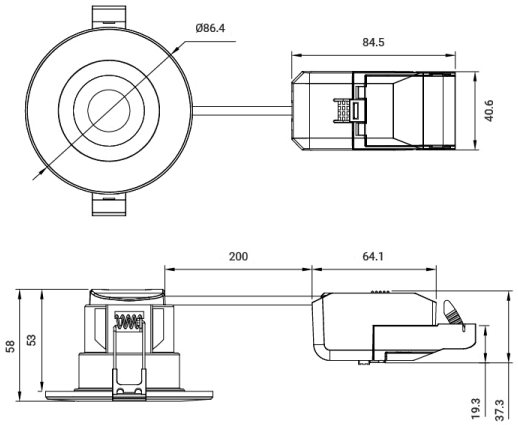

Input

Input Cable Length	250 mm
Input Cable Shape	Round
Input Current	0.03 A
Input Current Type	AC
Displacement Factor	0.7
Power Factor	0.8 A
Input Frequency	50 - 60 Hz
Input Voltage	220 -240 V

Control

Dimming Type	TRIAC
IC Type	Non-isolated

Ultra LEDs have taken reasonable care to ensure that the information in this datasheet is accurate at time of publication however it should be noted that all specifications are subject to tolerance. Descriptive specifications such as colour are subjective. Ultra LEDs reserve the right to update specifications without notice. The information in the datasheet may only be relied on by customers of Ultra LEDs in accordance with applicable terms and conditions

Dimming Range	5 - 100 %
Dimmable	Yes

Electrical Data

Constant Voltage / Constant Current	CC

Protection

Electrical Safety Class	II
Over Current Protection	Yes
Over Temperature Protection	Yes
Short Circuit Protection	Yes
Short Circuit Protection Mode	Hiccup

Photometric Data

Colour Type	Single Colour
CRI	90
Lumen Total	600 Lm
Lumens Per Watt	100 Lm/W
Lumens Per Watt (White)	100 Lm/W
Peak Luminous Intensity	850 cd
R9 Value	1
SDCM	< 6
CCT	2700 - 6500 K

Environment

Anti-Glare	Yes
Body Material	PC, Metal
Ingress Protection (IP)	IP65

Ultra LEDs have taken reasonable care to ensure that the information in this datasheet is accurate at time of publication however it should be noted that all specifications are subject to tolerance. Descriptive specifications such as colour are subjective. Ultra LEDs reserve the right to update specifications without notice. The information in the datasheet may only be relied on by customers of Ultra LEDs in accordance with applicable terms and conditions

Mounting Type	Recessed
Body Finish	White

Efficiency

L70B50	50000 Hours
L80B10	35000 Hours
L90B10	20000 Hours
LM80	50000Hours
Lumen Maintenance Factor	0.9
Rated Life	50000 Hours
TM21	107000

Packaging & Shipping

Items / Sets Per Pack	1

Ultra LEDs have taken reasonable care to ensure that the information in this datasheet is accurate at time of publication however it should be noted that all specifications are subject to tolerance. Descriptive specifications such as colour are subjective. Ultra LEDs reserve the right to update specifications without notice. The information in the datasheet may only be relied on by customers of Ultra LEDs in accordance with applicable terms and conditions