ACRE AREA LIGHT SERIES

CORE™

ESLAL2150BKHV

Key Features & Benefits:

- Four field-selectable wattages in one SKU
- Three field-selectable color temperatures, 3000K, 4000K and 5000K
- Type 3 distribution
- 0–10V dimmable driver, dims to off
- Die-cast aluminum housing, wet location rated
- 20kV surge protection
- 5-year limited warranty
- Optional 10-year extended warranty
- Rated from -40°F to 113°F ambient

Project: Date:

Catalog #:

Notes:

Product Specifications:

Selectable Wattage: 80W–100W–120W–150W
Selectable Kelvin: 3000K–4000K–5000K
Max Lumen Output: 25,650 Lumens
Efficacy: 171 lm/W
CRI: >70
Voltage: 277–480 VAC
Input Frequency: 50/60 Hz
Dimming: 0–10V Dim-to-Off
Operating Temperature: -40°F to 113°F
Lifetime Rated: 102,000 hrs
Power Factor: ≥0.90
THD: ≤20%
Lens Type: T3
Material: Die Cast Aluminum
Finish: Black
Dimensions: L14.72” x W13.35” x H2.56”
Weight (lbs): 7.2
Warranty: 5 Year

PART NUMBER:

ESLAL2150BKHV

150W CCT/Watt Selectable Fixture, Type 3, 277-480V, No Mount, Receptacle and Shorting Cap Included

Lumen Ambient Temperature (LAT) Multipliers:

AMBIENT TEMP		LUMEN MULTIPLIER
0°C	32°F	1.02
10°C	50°F	1.01
20°C	68°F	1.00
25°C	77°F	1.00
30°C	86°F	1.00
40°C	104°F	0.99
50°C	122°F	0.96

5 YEAR WARRANTY

DLC LISTED

UL CERTIFIED

DIMMABLE 0–10V DIM-TO-OFF

WET LOCATION

3CCT SELECTABLE KELVIN

MULTI-WATT SELECTABLE WATTAGE

© 2026 ESL Vision, LLC - Rev: 09/30/26

Field Installed Accessories:

OPTION	DESCRIPTION
ESLALSFBK	Area Light Slipfitter Mount Black
ESLALSRDMBK	Area Light Pole Mount Black
ESLALASRDMBK	Area Light Adjustable Pole Mount Black
ESLALWMBK	Area Light Wall Mount Black
ESLALTMBK	Area Light Trunnion Mount Black
ESL-PCOFHV	On/Off photocell (277–480 VAC)

Fixture Variants:

White Black Bronze

PART NUMBERS	DESCRIPTION
ESLAL2150BKHV	Black Finish, Type 3 Lens, High Voltage, 277–480 VAC
ESLAL2150BK	Black Finish, Type 3 Lens
ESLAL2150BKT4	Black Finish, Type 4 Lens
ESLAL2150BKT5	Black Finish, Type 5 Lens
ESLAL2150BKHVT4	Black Finish, Type 4 Lens, High Voltage, 277–480 VAC
ESLAL2150BKHVT5	Black Finish, Type 5 Lens, High Voltage, 277–480 VAC
ESLAL2150BZ	Bronze Finish, Type 3 Lens
ESLAL2150BZT4	Bronze Finish, Type 4 Lens
ESLAL2150BZT5	Bronze Finish, Type 5 Lens
ESLAL2150WH	White Finish, Type 3 Lens
ESLAL2150WHT4	White Finish, Type 4 Lens
ESLAL2150WHT5	White Finish, Type 5 Lens
ESLAL2150BZHV	Bronze Finish, Type 3 Lens, High Voltage, 277–480 VAC
ESLAL2150BZHVT4	Bronze Finish, Type 4 Lens, High Voltage, 277–480 VAC
ESLAL2150BZHVT5	Bronze Finish, Type 5 Lens, High Voltage, 277–480 VAC
ESLAL2150WHHV	White Finish, Type 3 Lens, High Voltage, 277–480 VAC
ESLAL2150WHHVT4	White Finish, Type 4 Lens, High Voltage, 277–480 VAC
ESLAL2150WHHVT5	White Finish, Type 5 Lens, High Voltage, 277–480 VAC

Catalog Data:

ITEM #	SELECTABLE WATTAGE	SELECTABLE KELVIN	MAX LUMEN OUTPUT	MAX EFFICACY	DIMENSIONS (LxWxH)
ESLAL2150BK	80W–100W–120W–150W	3000K–4000K–5000K	25,650 Lumens	171 lm/W	L14.72” x W13.35” x H2.56”
ESLAL2150BKHV	80W–100W–120W–150W	3000K–4000K–5000K	25,650 Lumens	171 lm/W	L14.72” x W13.35” x H2.56”
ESLAL2150BKHVT4	80W–100W–120W–150W	3000K–4000K–5000K	25,800 Lumens	172 lm/W	L14.72” x W13.35” x H2.56”
ESLAL2150BKHVT5	80W–100W–120W–150W	3000K–4000K–5000K	25,950 Lumens	173 lm/W	L14.72” x W13.35” x H2.56”
ESLAL2150BKT4	80W–100W–120W–150W	3000K–4000K–5000K	25,800 Lumens	172 lm/W	L14.72” x W13.35” x H2.56”
ESLAL2150BKT5	80W–100W–120W–150W	3000K–4000K–5000K	25,950 Lumens	173 lm/W	L14.72” x W13.35” x H2.56”
ESLAL2150BZ	80W–100W–120W–150W	3000K–4000K–5000K	25,650 Lumens	171 lm/W	L14.72” x W13.35” x H2.56”
ESLAL2150BZHV	80W–100W–120W–150W	3000K–4000K–5000K	25,650 Lumens	171 lm/W	L14.72” x W13.35” x H2.56”
ESLAL2150BZHVT4	80W–100W–120W–150W	3000K–4000K–5000K	25,800 Lumens	172 lm/W	L14.72” x W13.35” x H2.56”
ESLAL2150BZHVT5	80W–100W–120W–150W	3000K–4000K–5000K	25,950 Lumens	173 lm/W	L14.72” x W13.35” x H2.56”

© 2026 ESL Vision, LLC - Rev: 09/30/26

Catalog Data:

ITEM #	SELECTABLE WATTAGE	SELECTABLE KELVIN	MAX LUMEN OUTPUT	MAX EFFICACY	DIMENSIONS (LxWxH)
ESLAL2150BZT4	80W–100W–120W–150W	3000K–4000K–5000K	25,800 Lumens	172 lm/W	L14.72” x W13.35” x H2.56”
ESLAL2150BZT5	80W–100W–120W–150W	3000K–4000K–5000K	25,950 Lumens	173 lm/W	L14.72” x W13.35” x H2.56”
ESLAL2150WH	80W–100W–120W–150W	3000K–4000K–5000K	25,650 Lumens	171 lm/W	L14.72” x W13.35” x H2.56”
ESLAL2150WHHV	80W–100W–120W–150W	3000K–4000K–5000K	25,650 Lumens	171 lm/W	L14.72” x W13.35” x H2.56”
ESLAL2150WHHVT4	80W–100W–120W–150W	3000K–4000K–5000K	25,800 Lumens	172 lm/W	L14.72” x W13.35” x H2.56”
ESLAL2150WHHVT5	80W–100W–120W–150W	3000K–4000K–5000K	25,950 Lumens	173 lm/W	L14.72” x W13.35” x H2.56”
ESLAL2150WHT4	80W–100W–120W–150W	3000K–4000K–5000K	25,800 Lumens	172 lm/W	L14.72” x W13.35” x H2.56”
ESLAL2150WHT5	80W–100W–120W–150W	3000K–4000K–5000K	25,950 Lumens	173 lm/W	L14.72” x W13.35” x H2.56”
ESLAL2240BK	170W–200W–220W–240W	3000K–4000K–5000K	40,600 Lumens	169 lm/W	L16.34” x W14.88” x H2.56”
ESLAL2240BKHV	170W–200W–220W–240W	3000K–4000K–5000K	40,600 Lumens	169 lm/W	L16.34” x W14.88” x H2.56”
ESLAL2240BKHVT4	170W–200W–220W–240W	3000K–4000K–5000K	41,050 Lumens	171 lm/W	L16.34” x W14.88” x H2.56”
ESLAL2240BKHVT5	170W–200W–220W–240W	3000K–4000K–5000K	41,050 Lumens	171 lm/W	L16.34” x W14.88” x H2.56”
ESLAL2240BKT4	170W–200W–220W–240W	3000K–4000K–5000K	41,050 Lumens	171 lm/W	L16.34” x W14.88” x H2.56”
ESLAL2240BKT5	170W–200W–220W–240W	3000K–4000K–5000K	41,050 Lumens	171 lm/W	L16.34” x W14.88” x H2.56”
ESLAL2240BZ	170W–200W–220W–240W	3000K–4000K–5000K	40,600 Lumens	169 lm/W	L16.34” x W14.88” x H2.56”
ESLAL2240BZHV	170W–200W–220W–240W	3000K–4000K–5000K	40,600 Lumens	169 lm/W	L16.34” x W14.88” x H2.56”
ESLAL2240BZHVT4	170W–200W–220W–240W	3000K–4000K–5000K	41,050 Lumens	171 lm/W	L16.34” x W14.88” x H2.56”
ESLAL2240BZHVT5	170W–200W–220W–240W	3000K–4000K–5000K	41,050 Lumens	171 lm/W	L16.34” x W14.88” x H2.56”
ESLAL2240BZT4	170W–200W–220W–240W	3000K–4000K–5000K	41,050 Lumens	171 lm/W	L16.34” x W14.88” x H2.56”
ESLAL2240BZT5	170W–200W–220W–240W	3000K–4000K–5000K	41,050 Lumens	171 lm/W	L16.34” x W14.88” x H2.56”
ESLAL2240WH	170W–200W–220W–240W	3000K–4000K–5000K	40,600 Lumens	169 lm/W	L16.34” x W14.88” x H2.56”
ESLAL2240WHHV	170W–200W–220W–240W	3000K–4000K–5000K	40,600 Lumens	169 lm/W	L16.34” x W14.88” x H2.56”
ESLAL2240WHHVT4	170W–200W–220W–240W	3000K–4000K–5000K	41,050 Lumens	171 lm/W	L16.34” x W14.88” x H2.56”
ESLAL2240WHHVT5	170W–200W–220W–240W	3000K–4000K–5000K	41,050 Lumens	171 lm/W	L16.34” x W14.88” x H2.56”
ESLAL2240WHT4	170W–200W–220W–240W	3000K–4000K–5000K	41,050 Lumens	171 lm/W	L16.34” x W14.88” x H2.56”
ESLAL2240WHT5	170W–200W–220W–240W	3000K–4000K–5000K	41,050 Lumens	171 lm/W	L16.34” x W14.88” x H2.56”
ESLAL2310BK	240W–260W–280W–310W	3000K–4000K–5000K	52,700 Lumens	170 lm/W	L21.46” x W20.08” x H3.23”
ESLAL2310BKHV	240W–260W–280W–310W	3000K–4000K–5000K	52,700 Lumens	170 lm/W	L21.46” x W20.08” x H3.23”
ESLAL2310BKHVT4	240W–260W–280W–310W	3000K–4000K–5000K	53,350 Lumens	172 lm/W	L21.46” x W20.08” x H3.23”
ESLAL2310BKHVT5	240W–260W–280W–310W	3000K–4000K–5000K	53,010 Lumens	171 lm/W	L21.46” x W20.08” x H3.23”
ESLAL2310BKT4	240W–260W–280W–310W	3000K–4000K–5000K	53,350 Lumens	172 lm/W	L21.46” x W20.08” x H3.23”
ESLAL2310BKT5	240W–260W–280W–310W	3000K–4000K–5000K	53,010 Lumens	171 lm/W	L21.46” x W20.08” x H3.23”
ESLAL2310BZ	240W–260W–280W–310W	3000K–4000K–5000K	52,700 Lumens	170 lm/W	L21.46” x W20.08” x H3.23”
ESLAL2310BZHV	240W–260W–280W–310W	3000K–4000K–5000K	52,700 Lumens	170 lm/W	L21.46” x W20.08” x H3.23”
ESLAL2310BZHVT4	240W–260W–280W–310W	3000K–4000K–5000K	53,350 Lumens	172 lm/W	L21.46” x W20.08” x H3.23”
ESLAL2310BZHVT5	240W–260W–280W–310W	3000K–4000K–5000K	53,010 Lumens	171 lm/W	L21.46” x W20.08” x H3.23”
ESLAL2310BZT4	240W–260W–280W–310W	3000K–4000K–5000K	53,350 Lumens	172 lm/W	L21.46” x W20.08” x H3.23”
ESLAL2310BZT5	240W–260W–280W–310W	3000K–4000K–5000K	53,010 Lumens	171 lm/W	L21.46” x W20.08” x H3.23”
ESLAL2310WH	240W–260W–280W–310W	3000K–4000K–5000K	52,700 Lumens	170 lm/W	L21.46” x W20.08” x H3.23”
ESLAL2310WHHV	240W–260W–280W–310W	3000K–4000K–5000K	52,700 Lumens	170 lm/W	L21.46” x W20.08” x H3.23”

© 2026 ESL Vision, LLC - Rev: 09/30/26

Catalog Data:

ITEM #	SELECTABLE WATTAGE	SELECTABLE KELVIN	MAX LUMEN OUTPUT	MAX EFFICACY	DIMENSIONS (LxWxH)
ESLAL2310WHHVT4	240W–260W–280W–310W	3000K–4000K–5000K	53,350 Lumens	172 lm/W	L21.46” x W20.08” x H3.23”
ESLAL2310WHHVT5	240W–260W–280W–310W	3000K–4000K–5000K	53,010 Lumens	171 lm/W	L21.46” x W20.08” x H3.23”
ESLAL2310WHT4	240W–260W–280W–310W	3000K–4000K–5000K	53,350 Lumens	172 lm/W	L21.46” x W20.08” x H3.23”
ESLAL2310WHT5	240W–260W–280W–310W	3000K–4000K–5000K	53,010 Lumens	171 lm/W	L21.46” x W20.08” x H3.23”

Standard Voltage Electrical Load:

SYSTEM WATTS	120 VAC	208 VAC	240 VAC	277 VAC	INPUT VOLTAGE	INPUT FREQUENCY	POWER FACTOR	THD	OPERATING TEMP	SURGE PROTECTION	DIMMING
80	0.67	0.38	0.33	0.29	120–277 VAC	50/60 Hz	≥0.90	≤20%	-40°F to 113°F	20kV	0–10V Dim-to-Off
100	0.83	0.48	0.42	0.36	120–277 VAC	50/60 Hz	≥0.90	≤20%	-40°F to 113°F	20kV	0–10V Dim-to-Off
120	1.00	0.58	0.50	0.43	120–277 VAC	50/60 Hz	≥0.90	≤20%	-40°F to 113°F	20kV	0–10V Dim-to-Off
150	1.25	0.72	0.63	0.54	120–277 VAC	50/60 Hz	≥0.90	≤20%	-40°F to 113°F	20kV	0–10V Dim-to-Off
170	1.42	0.82	0.71	0.61	120–277 VAC	50/60 Hz	≥0.90	≤20%	-40°F to 113°F	20kV	0–10V Dim-to-Off
200	1.67	0.96	0.83	0.72	120–277 VAC	50/60 Hz	≥0.90	≤20%	-40°F to 113°F	20kV	0–10V Dim-to-Off
220	1.83	1.06	0.92	0.79	120–277 VAC	50/60 Hz	≥0.90	≤20%	-40°F to 113°F	20kV	0–10V Dim-to-Off
240	2.00	1.15	1.00	0.87	120–277 VAC	50/60 Hz	≥0.90	≤20%	-40°F to 113°F	20kV	0–10V Dim-to-Off
260	2.17	1.25	1.08	0.94	120–277 VAC	50/60 Hz	≥0.90	≤20%	-40°F to 113°F	20kV	0–10V Dim-to-Off
280	2.33	1.35	1.17	1.01	120–277 VAC	50/60 Hz	≥0.90	≤20%	-40°F to 113°F	20kV	0–10V Dim-to-Off
310	2.58	1.49	1.29	1.12	120–277 VAC	50/60 Hz	≥0.90	≤20%	-40°F to 113°F	20kV	0–10V Dim-to-Off

High Voltage Electrical Load:

SYSTEM WATTS	277 VAC	347 VAC	480 VAC	INPUT VOLTAGE	INPUT FREQUENCY	POWER FACTOR	THD	OPERATING TEMP	SURGE PROTECTION	DIMMING
80	0.29	0.23	0.17	277–480 VAC	50/60 Hz	≥0.90	≤20%	-40°F to 113°F	20kV	0–10V Dim-to-Off
100	0.36	0.29	0.21	277–480 VAC	50/60 Hz	≥0.90	≤20%	-40°F to 113°F	20kV	0–10V Dim-to-Off
120	0.43	0.35	0.25	277–480 VAC	50/60 Hz	≥0.90	≤20%	-40°F to 113°F	20kV	0–10V Dim-to-Off
150	0.54	0.43	0.31	277–480 VAC	50/60 Hz	≥0.90	≤20%	-40°F to 113°F	20kV	0–10V Dim-to-Off
170	0.61	0.49	0.35	277–480 VAC	50/60 Hz	≥0.90	≤20%	-40°F to 113°F	20kV	0–10V Dim-to-Off
200	0.72	0.58	0.42	277–480 VAC	50/60 Hz	≥0.90	≤20%	-40°F to 113°F	20kV	0–10V Dim-to-Off
220	0.79	0.63	0.46	277–480 VAC	50/60 Hz	≥0.90	≤20%	-40°F to 113°F	20kV	0–10V Dim-to-Off
240	0.87	0.69	0.50	277–480 VAC	50/60 Hz	≥0.90	≤20%	-40°F to 113°F	20kV	0–10V Dim-to-Off
260	0.94	0.75	0.54	277–480 VAC	50/60 Hz	≥0.90	≤20%	-40°F to 113°F	20kV	0–10V Dim-to-Off
280	1.01	0.81	0.58	277–480 VAC	50/60 Hz	≥0.90	≤20%	-40°F to 113°F	20kV	0–10V Dim-to-Off
310	1.12	0.89	0.65	277–480 VAC	50/60 Hz	≥0.90	≤20%	-40°F to 113°F	20kV	0–10V Dim-to-Off

© 2026 ESL Vision, LLC - Rev: 09/30/26

Dimensions:

FIXTURE BODIES

ESLAL2150

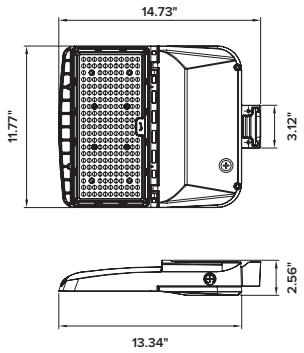

ESLAL2240

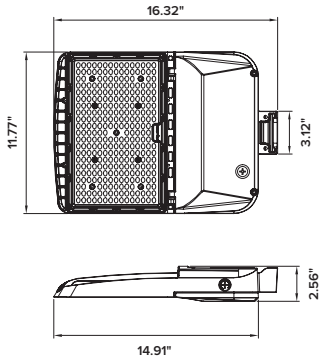

ESLAL2310

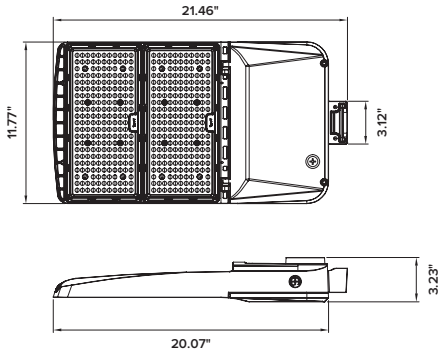

SQUARE & ROUND POLE MOUNT

ESLAL2150

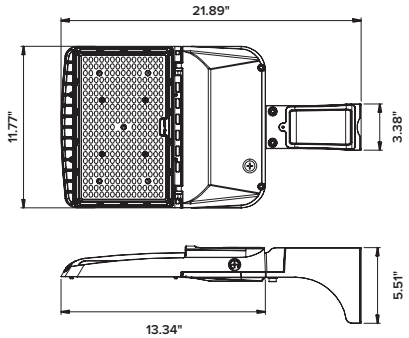

ESLAL2240

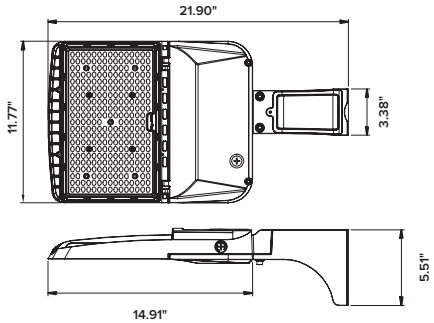

ESLAL2310

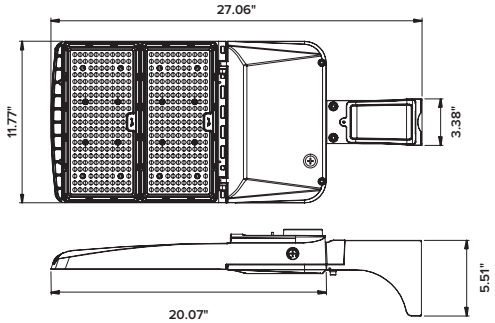

SLIP FITTER MOUNT

ESLAL2150

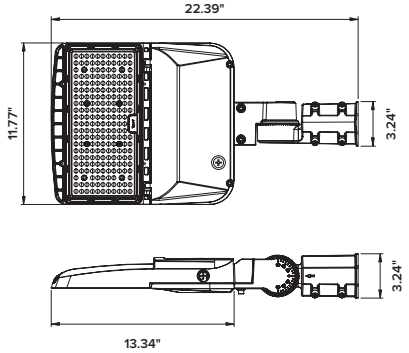

ESLAL2240

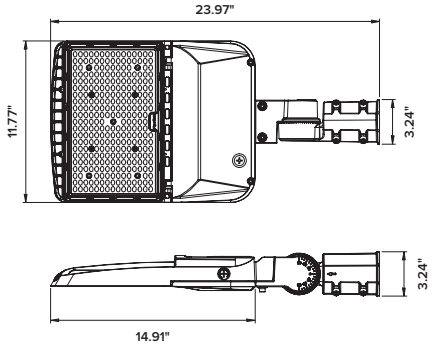

ESLAL2310

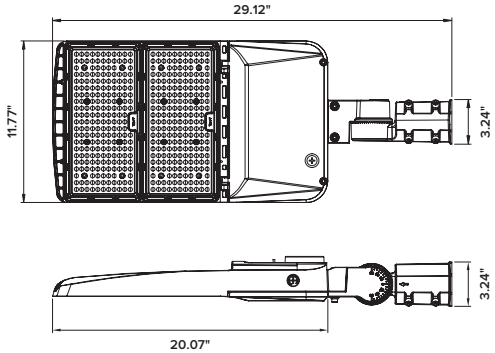

© 2026 ESL Vision, LLC - Rev: 09/30/26

Dimensions:

WALL MOUNT

ESLAL2150

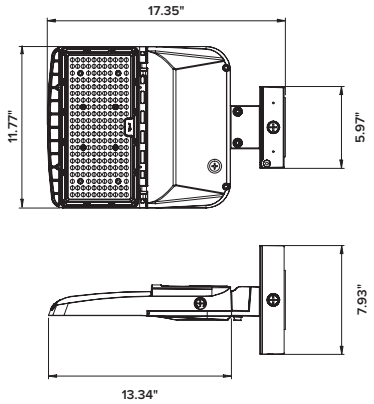

ESLAL2240

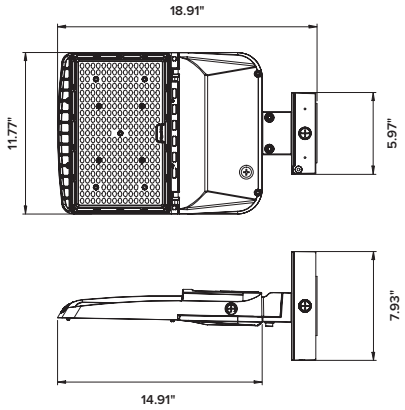

ESLAL2310

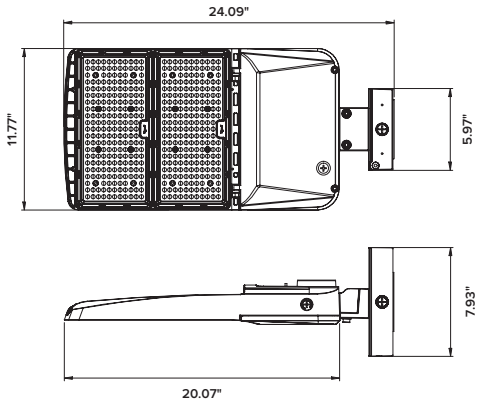

TRUNNION MOUNT

ESLAL2150

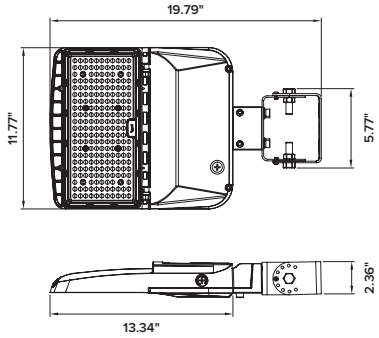

ESLAL2240

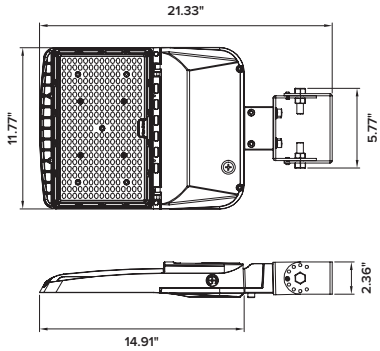

ESLAL2310

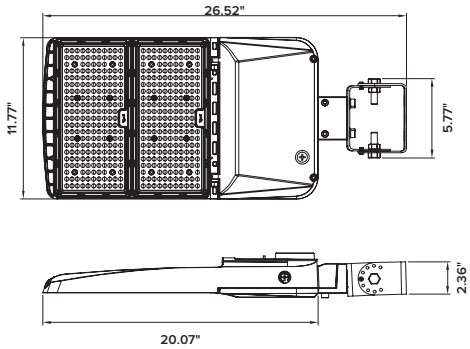

UNIVERSAL BRACKET MOUNT – BRONZE FIXTURES ONLY

ESLAL2150

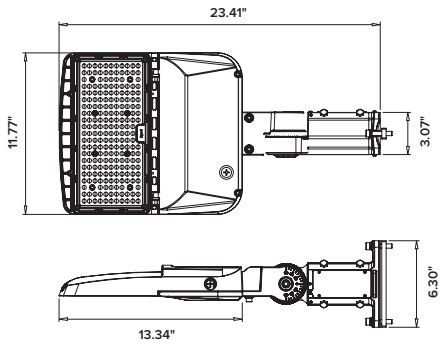

ESLAL2240

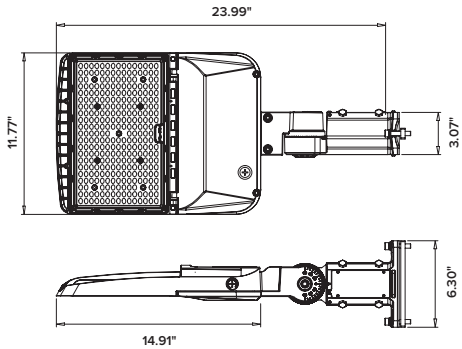

ESLAL2310

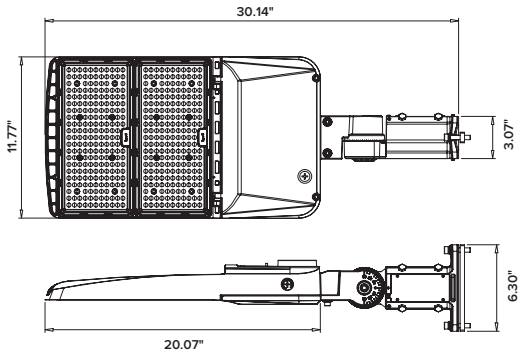

© 2026 ESL Vision, LLC - Rev: 09/30/26

Dimensions:

ADJUSTABLE SQUARE & ROUND POLE MOUNT

ESLAL2150

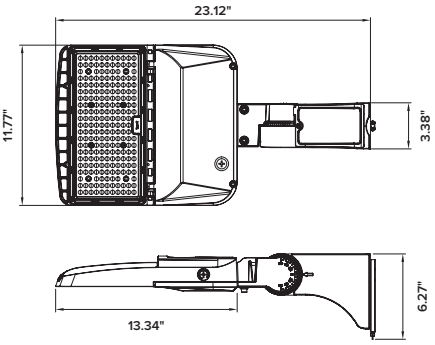

ESLAL2240

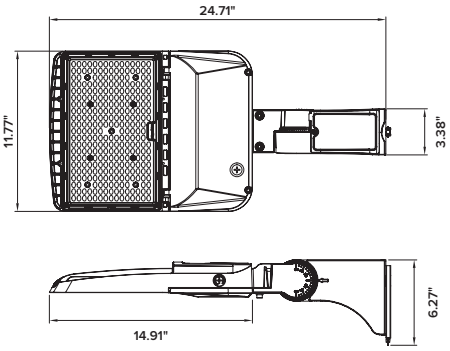

ESLAL2310

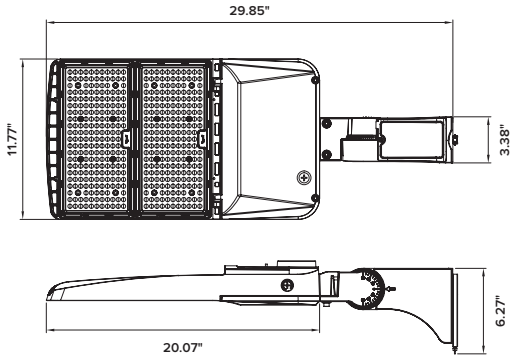

Mount Details:

SQUARE & ROUND POLE MOUNT

ESLALSRDM

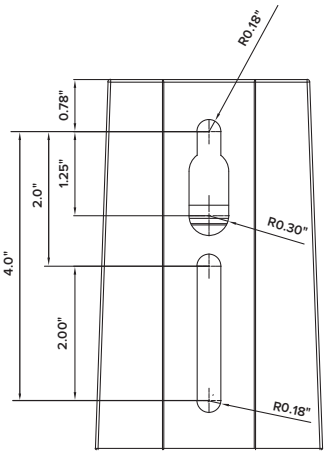

SLIP FITTER MOUNT

ESLALSF

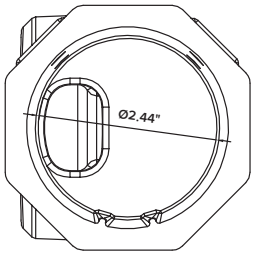

WALL MOUNT

ESLALWM

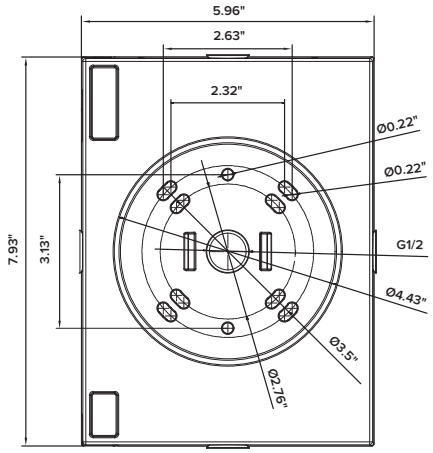

TRUNNION MOUNT

ESLALTM

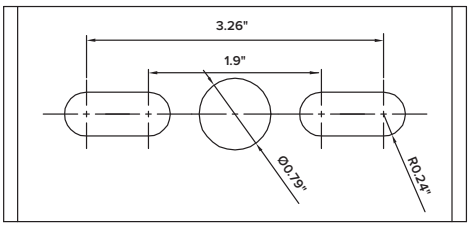

UNIVERSAL BRACKET MOUNT

ESLALUDMBZ

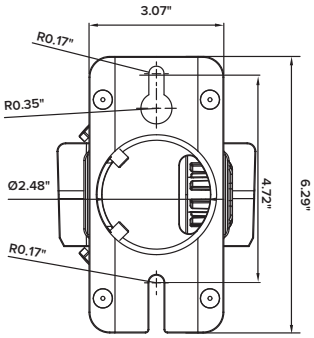

SQUARE & ROUND POLE MOUNT

ESLALASRDM

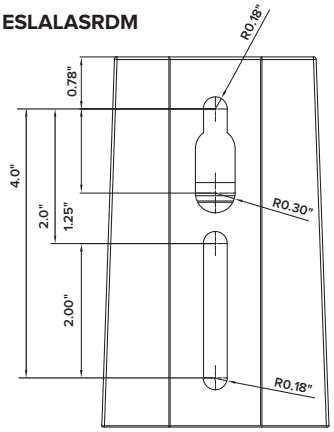

© 2026 ESL Vision, LLC - Rev: 09/30/26