# ACRE AREA LIGHT SERIES

CORE™

## ESLAL2150BZHV



Project: Date:

Catalog #:

Notes:

### Key Features & Benefits:

- Four field-selectable wattages in one SKU
- Three field-selectable color temperatures, 3000K, 4000K and 5000K
- Type 3 distribution
- 0–10V dimmable driver, dims to off
- Die-cast aluminum housing, wet location rated
- 20kV surge protection
- 5-year limited warranty
- Optional 10-year extended warranty
- Rated from -40°F to 113°F ambient

### Product Specifications:

**Selectable Wattage:** 80W–100W–120W–150W
**Selectable Kelvin:** 3000K–4000K–5000K
**Max Lumen Output:** 25,650 Lumens
**Efficacy:** 171 lm/W
**CRI:** >70
**Voltage:** 277–480 VAC
**Input Frequency:** 50/60 Hz
**Dimming:** 0–10V Dim-to-Off
**Operating Temperature:** -40°F to 113°F
**Lifetime Rated:** 102,000 hrs
**Power Factor:** ≥0.90
**THD:** ≤20%
**Lens Type:** T3
**Material:** Die Cast Aluminum
**Finish:** Bronze
**Dimensions:** L14.72” x W13.35” x H2.56”
**Weight (lbs):** 7.2
**Warranty:** 5 Year

**PART NUMBER:**

**ESLAL2150BZHV**

**150W CCT/Watt Selectable Fixture, Type 3, 277-480V, No Mount, Receptacle and Shorting Cap Included**

### Lumen Ambient Temperature (LAT) Multipliers:

| AMBIENT TEMP | | LUMEN MULTIPLIER |
|---|---|---|
| 0°C | 32°F | 1.02 |
| 10°C | 50°F | 1.01 |
| 20°C | 68°F | 1.00 |
| 25°C | 77°F | 1.00 |
| 30°C | 86°F | 1.00 |
| 40°C | 104°F | 0.99 |
| 50°C | 122°F | 0.96 |

5 YEAR WARRANTY

DLC LISTED

UL CERTIFIED

DIMMABLE 0–10V DIM-TO-OFF

WET LOCATION

3CCT SELECTABLE KELVIN

MULTI-WATT SELECTABLE WATTAGE



© 2026 ESL Vision, LLC - Rev: 09/30/26

## Field Installed Accessories:

| OPTION | DESCRIPTION |
|---|---|
| ESLALSFBZ | Area Light Slipfitter Mount Bronze |
| ESLALSRDMBZ | Area Light Pole Mount Bronze |
| ESLALASRDMBZ | Area Light Adjustable Pole Mount Bronze |
| ESLALUDMBZ | Area Light Universal Pole Mount Bronze |
| ESLALWMBZ | Area Light Wall Mount Bronze |
| ESLALTMBZ | Area Light Trunnion Mount Bronze |
| ESL-PCOFHV | On/Off photocell (277–480 VAC) |
| ESLALHSSBZ | Area Light House Side Shield 150W |
| ESLALFSSBZ | Area Light Full 360 Shield 150W |

## Fixture Variants:

White Black Bronze

| PART NUMBERS | DESCRIPTION |
|---|---|
| ESLAL2150BZHV | Bronze Finish, Type 3 Lens, High Voltage, 277–480 VAC |
| ESLAL2150BZ | Bronze Finish, Type 3 Lens |
| ESLAL2150BZT4 | Bronze Finish, Type 4 Lens |
| ESLAL2150BZT5 | Bronze Finish, Type 5 Lens |
| ESLAL2150BZHVT4 | Bronze Finish, Type 4 Lens, High Voltage, 277–480 VAC |
| ESLAL2150BZHVT5 | Bronze Finish, Type 5 Lens, High Voltage, 277–480 VAC |
| ESLAL2150BK | Black Finish, Type 3 Lens |
| ESLAL2150BKT4 | Black Finish, Type 4 Lens |
| ESLAL2150BKT5 | Black Finish, Type 5 Lens |
| ESLAL2150WH | White Finish, Type 3 Lens |
| ESLAL2150WHT4 | White Finish, Type 4 Lens |
| ESLAL2150WHT5 | White Finish, Type 5 Lens |
| ESLAL2150BKHV | Black Finish, Type 3 Lens, High Voltage, 277–480 VAC |
| ESLAL2150BKHVT4 | Black Finish, Type 4 Lens, High Voltage, 277–480 VAC |
| ESLAL2150BKHVT5 | Black Finish, Type 5 Lens, High Voltage, 277–480 VAC |
| ESLAL2150WHHV | White Finish, Type 3 Lens, High Voltage, 277–480 VAC |
| ESLAL2150WHHVT4 | White Finish, Type 4 Lens, High Voltage, 277–480 VAC |
| ESLAL2150WHHVT5 | White Finish, Type 5 Lens, High Voltage, 277–480 VAC |

## Catalog Data:

| ITEM # | SELECTABLE WATTAGE | SELECTABLE KELVIN | MAX LUMEN OUTPUT | MAX EFFICACY | DIMENSIONS (LxWxH) |
|---|---|---|---|---|---|
| ESLAL2150BK | 80W–100W–120W–150W | 3000K–4000K–5000K | 25,650 Lumens | 171 lm/W | L14.72” x W13.35” x H2.56” |
| ESLAL2150BKHV | 80W–100W–120W–150W | 3000K–4000K–5000K | 25,650 Lumens | 171 lm/W | L14.72” x W13.35” x H2.56” |
| ESLAL2150BKHVT4 | 80W–100W–120W–150W | 3000K–4000K–5000K | 25,800 Lumens | 172 lm/W | L14.72” x W13.35” x H2.56” |
| ESLAL2150BKHVT5 | 80W–100W–120W–150W | 3000K–4000K–5000K | 25,950 Lumens | 173 lm/W | L14.72” x W13.35” x H2.56” |
| ESLAL2150BKT4 | 80W–100W–120W–150W | 3000K–4000K–5000K | 25,800 Lumens | 172 lm/W | L14.72” x W13.35” x H2.56” |
| ESLAL2150BKT5 | 80W–100W–120W–150W | 3000K–4000K–5000K | 25,950 Lumens | 173 lm/W | L14.72” x W13.35” x H2.56” |
| ESLAL2150BZ | 80W–100W–120W–150W | 3000K–4000K–5000K | 25,650 Lumens | 171 lm/W | L14.72” x W13.35” x H2.56” |


© 2026 ESL Vision, LLC - Rev: 09/30/26

## Catalog Data:

| ITEM # | SELECTABLE WATTAGE | SELECTABLE KELVIN | MAX LUMEN OUTPUT | MAX EFFICACY | DIMENSIONS (LxWxH) |
|---|---|---|---|---|---|
| ESLAL2150BZHV | 80W–100W–120W–150W | 3000K–4000K–5000K | 25,650 Lumens | 171 lm/W | L14.72” x W13.35” x H2.56” |
| ESLAL2150BZHVT4 | 80W–100W–120W–150W | 3000K–4000K–5000K | 25,800 Lumens | 172 lm/W | L14.72” x W13.35” x H2.56” |
| ESLAL2150BZHVT5 | 80W–100W–120W–150W | 3000K–4000K–5000K | 25,950 Lumens | 173 lm/W | L14.72” x W13.35” x H2.56” |
| ESLAL2150BZT4 | 80W–100W–120W–150W | 3000K–4000K–5000K | 25,800 Lumens | 172 lm/W | L14.72” x W13.35” x H2.56” |
| ESLAL2150BZT5 | 80W–100W–120W–150W | 3000K–4000K–5000K | 25,950 Lumens | 173 lm/W | L14.72” x W13.35” x H2.56” |
| ESLAL2150WH | 80W–100W–120W–150W | 3000K–4000K–5000K | 25,650 Lumens | 171 lm/W | L14.72” x W13.35” x H2.56” |
| ESLAL2150WHHV | 80W–100W–120W–150W | 3000K–4000K–5000K | 25,650 Lumens | 171 lm/W | L14.72” x W13.35” x H2.56” |
| ESLAL2150WHHVT4 | 80W–100W–120W–150W | 3000K–4000K–5000K | 25,800 Lumens | 172 lm/W | L14.72” x W13.35” x H2.56” |
| ESLAL2150WHHVT5 | 80W–100W–120W–150W | 3000K–4000K–5000K | 25,950 Lumens | 173 lm/W | L14.72” x W13.35” x H2.56” |
| ESLAL2150WHT4 | 80W–100W–120W–150W | 3000K–4000K–5000K | 25,800 Lumens | 172 lm/W | L14.72” x W13.35” x H2.56” |
| ESLAL2150WHT5 | 80W–100W–120W–150W | 3000K–4000K–5000K | 25,950 Lumens | 173 lm/W | L14.72” x W13.35” x H2.56” |
| ESLAL2240BK | 170W–200W–220W–240W | 3000K–4000K–5000K | 40,600 Lumens | 169 lm/W | L16.34” x W14.88” x H2.56” |
| ESLAL2240BKHV | 170W–200W–220W–240W | 3000K–4000K–5000K | 40,600 Lumens | 169 lm/W | L16.34” x W14.88” x H2.56” |
| ESLAL2240BKHVT4 | 170W–200W–220W–240W | 3000K–4000K–5000K | 41,050 Lumens | 171 lm/W | L16.34” x W14.88” x H2.56” |
| ESLAL2240BKHVT5 | 170W–200W–220W–240W | 3000K–4000K–5000K | 41,050 Lumens | 171 lm/W | L16.34” x W14.88” x H2.56” |
| ESLAL2240BKT4 | 170W–200W–220W–240W | 3000K–4000K–5000K | 41,050 Lumens | 171 lm/W | L16.34” x W14.88” x H2.56” |
| ESLAL2240BKT5 | 170W–200W–220W–240W | 3000K–4000K–5000K | 41,050 Lumens | 171 lm/W | L16.34” x W14.88” x H2.56” |
| ESLAL2240BZ | 170W–200W–220W–240W | 3000K–4000K–5000K | 40,600 Lumens | 169 lm/W | L16.34” x W14.88” x H2.56” |
| ESLAL2240BZHV | 170W–200W–220W–240W | 3000K–4000K–5000K | 40,600 Lumens | 169 lm/W | L16.34” x W14.88” x H2.56” |
| ESLAL2240BZHVT4 | 170W–200W–220W–240W | 3000K–4000K–5000K | 41,050 Lumens | 171 lm/W | L16.34” x W14.88” x H2.56” |
| ESLAL2240BZHVT5 | 170W–200W–220W–240W | 3000K–4000K–5000K | 41,050 Lumens | 171 lm/W | L16.34” x W14.88” x H2.56” |
| ESLAL2240BZT4 | 170W–200W–220W–240W | 3000K–4000K–5000K | 41,050 Lumens | 171 lm/W | L16.34” x W14.88” x H2.56” |
| ESLAL2240BZT5 | 170W–200W–220W–240W | 3000K–4000K–5000K | 41,050 Lumens | 171 lm/W | L16.34” x W14.88” x H2.56” |
| ESLAL2240WH | 170W–200W–220W–240W | 3000K–4000K–5000K | 40,600 Lumens | 169 lm/W | L16.34” x W14.88” x H2.56” |
| ESLAL2240WHHV | 170W–200W–220W–240W | 3000K–4000K–5000K | 40,600 Lumens | 169 lm/W | L16.34” x W14.88” x H2.56” |
| ESLAL2240WHHVT4 | 170W–200W–220W–240W | 3000K–4000K–5000K | 41,050 Lumens | 171 lm/W | L16.34” x W14.88” x H2.56” |
| ESLAL2240WHHVT5 | 170W–200W–220W–240W | 3000K–4000K–5000K | 41,050 Lumens | 171 lm/W | L16.34” x W14.88” x H2.56” |
| ESLAL2240WHT4 | 170W–200W–220W–240W | 3000K–4000K–5000K | 41,050 Lumens | 171 lm/W | L16.34” x W14.88” x H2.56” |
| ESLAL2240WHT5 | 170W–200W–220W–240W | 3000K–4000K–5000K | 41,050 Lumens | 171 lm/W | L16.34” x W14.88” x H2.56” |
| ESLAL2310BK | 240W–260W–280W–310W | 3000K–4000K–5000K | 52,700 Lumens | 170 lm/W | L21.46” x W20.08” x H3.23” |
| ESLAL2310BKHV | 240W–260W–280W–310W | 3000K–4000K–5000K | 52,700 Lumens | 170 lm/W | L21.46” x W20.08” x H3.23” |
| ESLAL2310BKHVT4 | 240W–260W–280W–310W | 3000K–4000K–5000K | 53,350 Lumens | 172 lm/W | L21.46” x W20.08” x H3.23” |
| ESLAL2310BKHVT5 | 240W–260W–280W–310W | 3000K–4000K–5000K | 53,010 Lumens | 171 lm/W | L21.46” x W20.08” x H3.23” |
| ESLAL2310BKT4 | 240W–260W–280W–310W | 3000K–4000K–5000K | 53,350 Lumens | 172 lm/W | L21.46” x W20.08” x H3.23” |
| ESLAL2310BKT5 | 240W–260W–280W–310W | 3000K–4000K–5000K | 53,010 Lumens | 171 lm/W | L21.46” x W20.08” x H3.23” |
| ESLAL2310BZ | 240W–260W–280W–310W | 3000K–4000K–5000K | 52,700 Lumens | 170 lm/W | L21.46” x W20.08” x H3.23” |
| ESLAL2310BZHV | 240W–260W–280W–310W | 3000K–4000K–5000K | 52,700 Lumens | 170 lm/W | L21.46” x W20.08” x H3.23” |
| ESLAL2310BZHVT4 | 240W–260W–280W–310W | 3000K–4000K–5000K | 53,350 Lumens | 172 lm/W | L21.46” x W20.08” x H3.23” |
| ESLAL2310BZHVT5 | 240W–260W–280W–310W | 3000K–4000K–5000K | 53,010 Lumens | 171 lm/W | L21.46” x W20.08” x H3.23” |
| ESLAL2310BZT4 | 240W–260W–280W–310W | 3000K–4000K–5000K | 53,350 Lumens | 172 lm/W | L21.46” x W20.08” x H3.23” |


© 2026 ESL Vision, LLC - Rev: 09/30/26

## Catalog Data:

| ITEM # | SELECTABLE WATTAGE | SELECTABLE KELVIN | MAX LUMEN OUTPUT | MAX EFFICACY | DIMENSIONS (LxWxH) |
|---|---|---|---|---|---|
| ESLAL2310BZT5 | 240W–260W–280W–310W | 3000K–4000K–5000K | 53,010 Lumens | 171 lm/W | L21.46” x W20.08” x H3.23” |
| ESLAL2310WH | 240W–260W–280W–310W | 3000K–4000K–5000K | 52,700 Lumens | 170 lm/W | L21.46” x W20.08” x H3.23” |
| ESLAL2310WHHV | 240W–260W–280W–310W | 3000K–4000K–5000K | 52,700 Lumens | 170 lm/W | L21.46” x W20.08” x H3.23” |
| ESLAL2310WHHVT4 | 240W–260W–280W–310W | 3000K–4000K–5000K | 53,350 Lumens | 172 lm/W | L21.46” x W20.08” x H3.23” |
| ESLAL2310WHHVT5 | 240W–260W–280W–310W | 3000K–4000K–5000K | 53,010 Lumens | 171 lm/W | L21.46” x W20.08” x H3.23” |
| ESLAL2310WHT4 | 240W–260W–280W–310W | 3000K–4000K–5000K | 53,350 Lumens | 172 lm/W | L21.46” x W20.08” x H3.23” |
| ESLAL2310WHT5 | 240W–260W–280W–310W | 3000K–4000K–5000K | 53,010 Lumens | 171 lm/W | L21.46” x W20.08” x H3.23” |

## Standard Voltage Electrical Load:

| SYSTEM WATTS | 120 VAC | 208 VAC | 240 VAC | 277 VAC | INPUT VOLTAGE | INPUT FREQUENCY | POWER FACTOR | THD | OPERATING TEMP | SURGE PROTECTION | DIMMING |
|---|---|---|---|---|---|---|---|---|---|---|---|
| 80 | 0.67 | 0.38 | 0.33 | 0.29 | 120–277 VAC | 50/60 Hz | ≥0.90 | ≤20% | -40°F to 113°F | 20kV | 0–10V Dim-to-Off |
| 100 | 0.83 | 0.48 | 0.42 | 0.36 | 120–277 VAC | 50/60 Hz | ≥0.90 | ≤20% | -40°F to 113°F | 20kV | 0–10V Dim-to-Off |
| 120 | 1.00 | 0.58 | 0.50 | 0.43 | 120–277 VAC | 50/60 Hz | ≥0.90 | ≤20% | -40°F to 113°F | 20kV | 0–10V Dim-to-Off |
| 150 | 1.25 | 0.72 | 0.63 | 0.54 | 120–277 VAC | 50/60 Hz | ≥0.90 | ≤20% | -40°F to 113°F | 20kV | 0–10V Dim-to-Off |
| 170 | 1.42 | 0.82 | 0.71 | 0.61 | 120–277 VAC | 50/60 Hz | ≥0.90 | ≤20% | -40°F to 113°F | 20kV | 0–10V Dim-to-Off |
| 200 | 1.67 | 0.96 | 0.83 | 0.72 | 120–277 VAC | 50/60 Hz | ≥0.90 | ≤20% | -40°F to 113°F | 20kV | 0–10V Dim-to-Off |
| 220 | 1.83 | 1.06 | 0.92 | 0.79 | 120–277 VAC | 50/60 Hz | ≥0.90 | ≤20% | -40°F to 113°F | 20kV | 0–10V Dim-to-Off |
| 240 | 2.00 | 1.15 | 1.00 | 0.87 | 120–277 VAC | 50/60 Hz | ≥0.90 | ≤20% | -40°F to 113°F | 20kV | 0–10V Dim-to-Off |
| 260 | 2.17 | 1.25 | 1.08 | 0.94 | 120–277 VAC | 50/60 Hz | ≥0.90 | ≤20% | -40°F to 113°F | 20kV | 0–10V Dim-to-Off |
| 280 | 2.33 | 1.35 | 1.17 | 1.01 | 120–277 VAC | 50/60 Hz | ≥0.90 | ≤20% | -40°F to 113°F | 20kV | 0–10V Dim-to-Off |
| 310 | 2.58 | 1.49 | 1.29 | 1.12 | 120–277 VAC | 50/60 Hz | ≥0.90 | ≤20% | -40°F to 113°F | 20kV | 0–10V Dim-to-Off |

## High Voltage Electrical Load:

| SYSTEM WATTS | 277 VAC | 347 VAC | 480 VAC | INPUT VOLTAGE | INPUT FREQUENCY | POWER FACTOR | THD | OPERATING TEMP | SURGE PROTECTION | DIMMING |
|---|---|---|---|---|---|---|---|---|---|---|
| 80 | 0.29 | 0.23 | 0.17 | 277–480 VAC | 50/60 Hz | ≥0.90 | ≤20% | -40°F to 113°F | 20kV | 0–10V Dim-to-Off |
| 100 | 0.36 | 0.29 | 0.21 | 277–480 VAC | 50/60 Hz | ≥0.90 | ≤20% | -40°F to 113°F | 20kV | 0–10V Dim-to-Off |
| 120 | 0.43 | 0.35 | 0.25 | 277–480 VAC | 50/60 Hz | ≥0.90 | ≤20% | -40°F to 113°F | 20kV | 0–10V Dim-to-Off |
| 150 | 0.54 | 0.43 | 0.31 | 277–480 VAC | 50/60 Hz | ≥0.90 | ≤20% | -40°F to 113°F | 20kV | 0–10V Dim-to-Off |
| 170 | 0.61 | 0.49 | 0.35 | 277–480 VAC | 50/60 Hz | ≥0.90 | ≤20% | -40°F to 113°F | 20kV | 0–10V Dim-to-Off |
| 200 | 0.72 | 0.58 | 0.42 | 277–480 VAC | 50/60 Hz | ≥0.90 | ≤20% | -40°F to 113°F | 20kV | 0–10V Dim-to-Off |
| 220 | 0.79 | 0.63 | 0.46 | 277–480 VAC | 50/60 Hz | ≥0.90 | ≤20% | -40°F to 113°F | 20kV | 0–10V Dim-to-Off |
| 240 | 0.87 | 0.69 | 0.50 | 277–480 VAC | 50/60 Hz | ≥0.90 | ≤20% | -40°F to 113°F | 20kV | 0–10V Dim-to-Off |


© 2026 ESL Vision, LLC - Rev: 09/30/26

## High Voltage Electrical Load:

| SYSTEM WATTS | 277 VAC | 347 VAC | 480 VAC | INPUT VOLTAGE | INPUT FREQUENCY | POWER FACTOR | THD | OPERATING TEMP | SURGE PROTECTION | DIMMING |
|---|---|---|---|---|---|---|---|---|---|---|
| 260 | 0.94 | 0.75 | 0.54 | 277–480 VAC | 50/60 Hz | ≥0.90 | ≤20% | -40°F to 113°F | 20kV | 0–10V Dim-to-Off |
| 280 | 1.01 | 0.81 | 0.58 | 277–480 VAC | 50/60 Hz | ≥0.90 | ≤20% | -40°F to 113°F | 20kV | 0–10V Dim-to-Off |
| 310 | 1.12 | 0.89 | 0.65 | 277–480 VAC | 50/60 Hz | ≥0.90 | ≤20% | -40°F to 113°F | 20kV | 0–10V Dim-to-Off |


© 2026 ESL Vision, LLC - Rev: 09/30/26

## Dimensions:

### FIXTURE BODIES

**ESLAL2150**

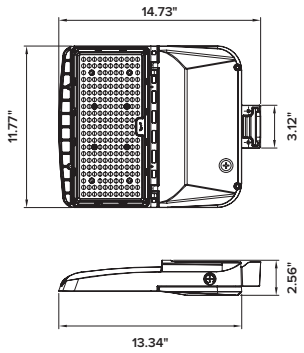


**ESLAL2240**

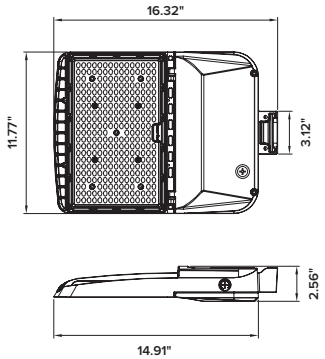


**ESLAL2310**

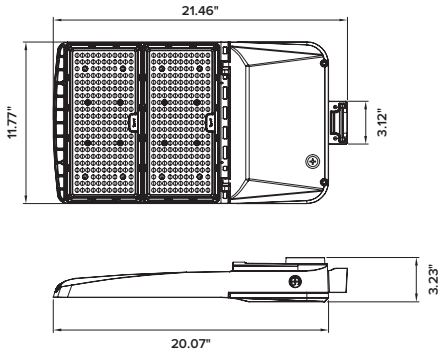


### SQUARE & ROUND POLE MOUNT

**ESLAL2150**

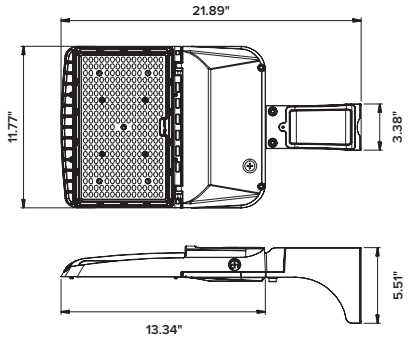


**ESLAL2240**

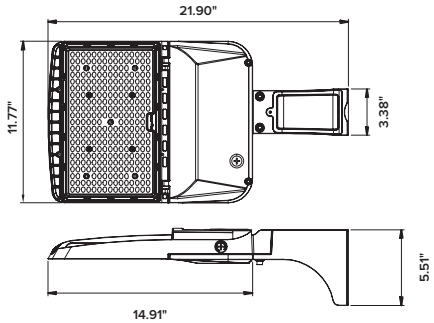


**ESLAL2310**

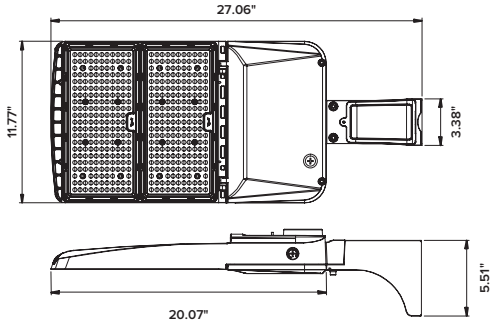


### SLIP FITTER MOUNT

**ESLAL2150**

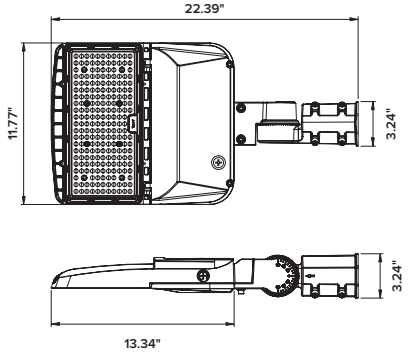


**ESLAL2240**

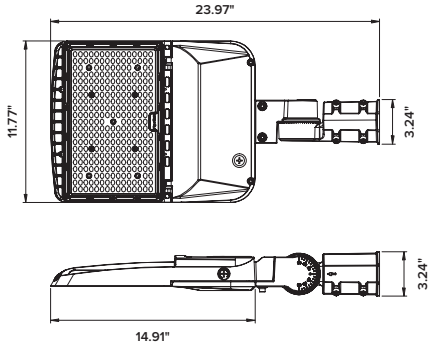


**ESLAL2310**

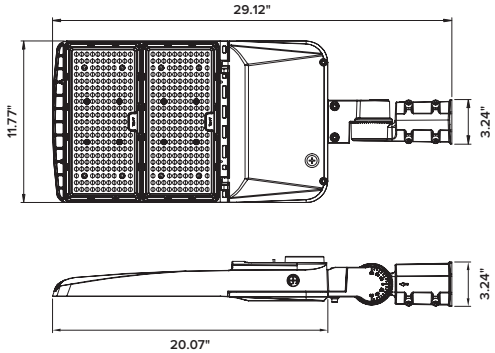




© 2026 ESL Vision, LLC - Rev: 09/30/26

## Dimensions:

### WALL MOUNT

**ESLAL2150**

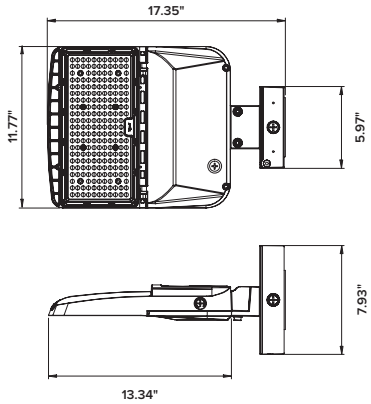


**ESLAL2240**

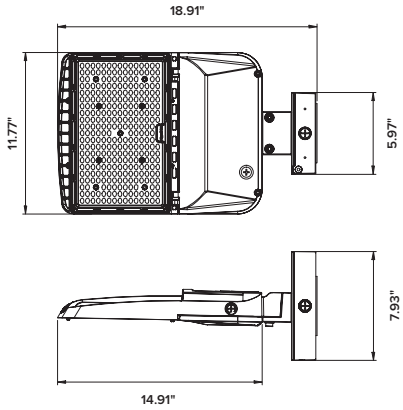


**ESLAL2310**

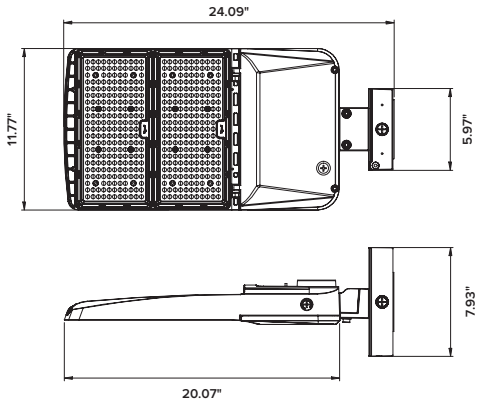


### TRUNNION MOUNT

**ESLAL2150**

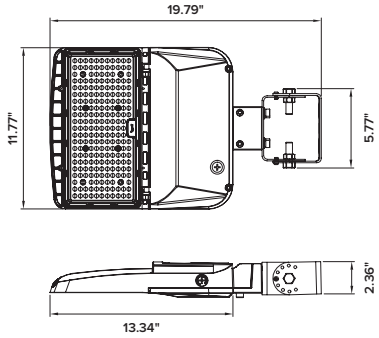


**ESLAL2240**

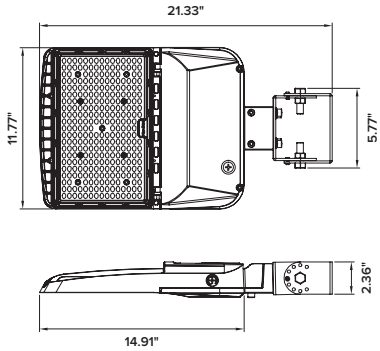


**ESLAL2310**

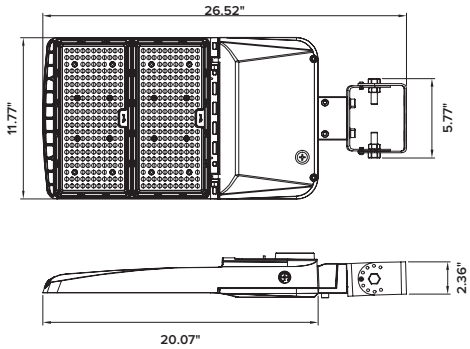


### UNIVERSAL BRACKET MOUNT – BRONZE FIXTURES ONLY

**ESLAL2150**

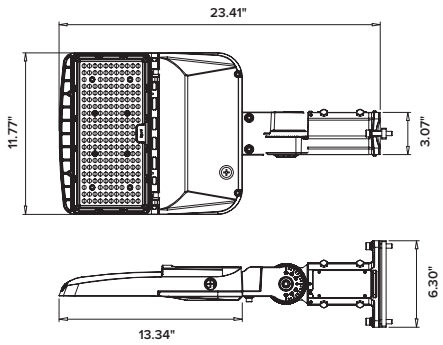


**ESLAL2240**

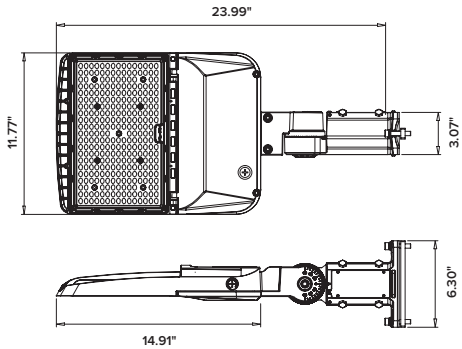


**ESLAL2310**

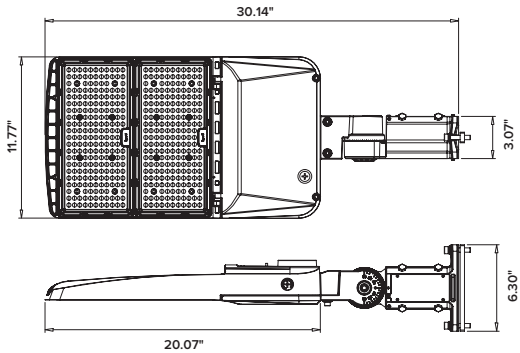




© 2026 ESL Vision, LLC - Rev: 09/30/26

## Dimensions:

### ADJUSTABLE SQUARE & ROUND POLE MOUNT

**ESLAL2150**

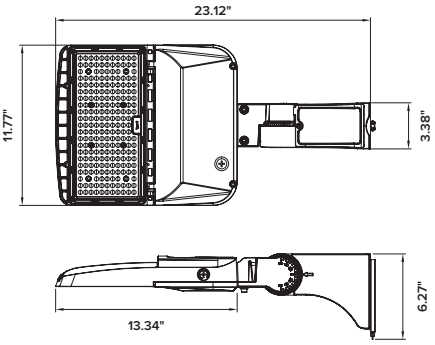


**ESLAL2240**

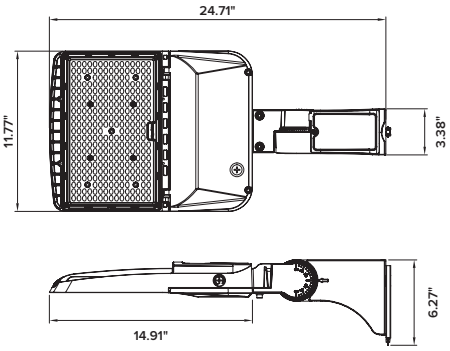


**ESLAL2310**

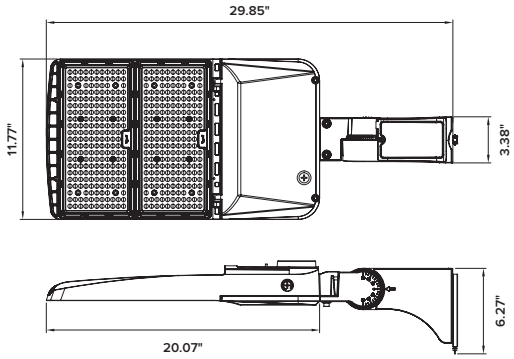


## Mount Details:

### SQUARE & ROUND POLE MOUNT

**ESLALSRDM**

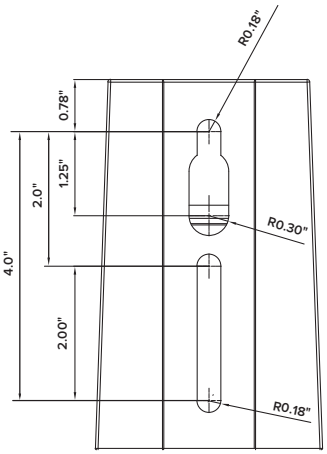


### SLIP FITTER MOUNT

**ESLALSF**

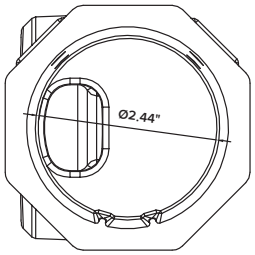


### WALL MOUNT

**ESLALWM**

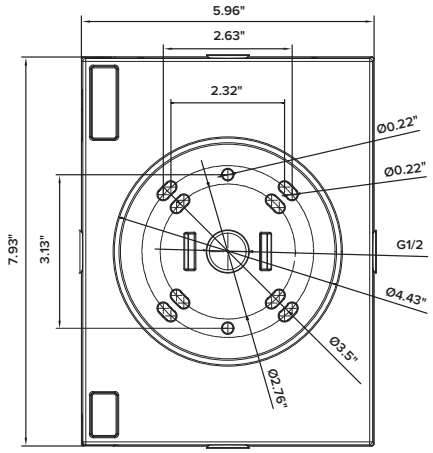


### TRUNNION MOUNT

**ESLALTM**

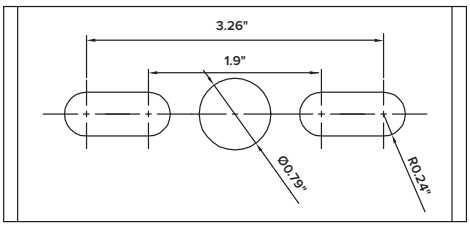


### UNIVERSAL BRACKET MOUNT

**ESLALUDMBZ**

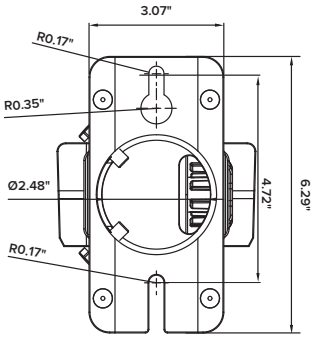


### SQUARE & ROUND POLE MOUNT

**ESLALASRDM**

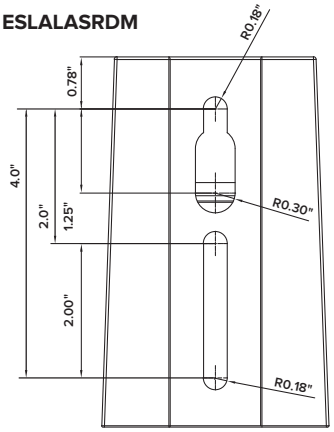




© 2026 ESL Vision, LLC - Rev: 09/30/26