INTELLISENSE TROFFER

CORE™

ESLTRF2240SR

Project: Date:

Catalog #:

Notes:

Key Features & Benefits:

- Four selectable wattages in one fixture SKU
- Five selectable CCTs from 3000K to 6500K
- 120–277V universal input
- CRI above 80
- Twenty configurations from one part number
- Sensor ready for field-installable occupancy and daylight sensors
- 5-year warranty

Product Specifications:

Selectable Wattage: 20W–28W–34W–40W
Selectable Kelvin: 3000K–3500K–4000K–5000K–6500K
Max Lumen Output: 6,000 Lumens
Efficacy: 150 lm/W
Beam Angle: 110°
CRI: >80
Voltage: 120–277 VAC
Input Frequency: 50/60 Hz
Dimming: 0–10V Dim-to-Off
Operating Temperature: -4°F to 113°F (-20°C to 45°C)
Lifetime Rated: 100,000 hrs
Power Factor: ≥0.90
THD: ≤20%
Finish: White
Dimensions: L23.74” x W23.74” x H2.13”
Weight (lbs): 5.62
Warranty: 5 Year

PART NUMBER:

ESLTRF2240SR

2x2 Troffer, 40W, CCT/Watt Selectable, Sensor Ready, Sensor Not Included

WARRANTY 5 YEAR WARRANTY

DIMMABLE 0–10V DIM-TO-OFF

DAMP LOCATION

OCCUPANCY CAPABLE

INTELLISENSE™

5CCT SELECTABLE KELVIN

MULTI-WATT SELECTABLE WATTAGE

Lumen Ambient Temperature (LAT) Multipliers:

AMBIENT TEMP		LUMEN MULTIPLIER
0°C	32°F	1.02
10°C	50°F	1.01
20°C	68°F	1.00
25°C	77°F	1.00
30°C	86°F	1.00
40°C	104°F	0.99
50°C	122°F	0.96

© 2026 ESL Vision, LLC - Rev: 10/06/26

Field Installed Accessories:

OPTION	DESCRIPTION
ESL-ISS-MSEN-01	ISS MultiSense™ PIR/Daylight for Indoor
ESL-ISS-SSEN-01	ISS SoloSense™ PIR/Daylight for Indoor
ESL-ISS-REM-01	ISS Remote for SoloSense™

Fixture Variants:

PART NUMBERS	DESCRIPTION
ESLTRF2240SR	Standard, 120–277 VAC, Sensor Ready
ESLTRF2240SREM	Sensor Ready, w/ Integrated 8W Emergency Backup

White

Catalog Data:

ITEM #	SELECTABLE WATTAGE	SELECTABLE KELVIN	MAX LUMEN OUTPUT	MAX EFFICACY	DIMENSIONS (LxWxH)
ESLTRF2240SR	20W–28W–34W–40W	3000K–3500K–4000K–5000K–6500K	6,000 Lumens	150 lm/W	L23.74” x W23.74” x H2.13”
ESLTRF2240SREM	20W–28W–34W–40W	3000K–3500K–4000K–5000K–6500K	6,000 Lumens	150 lm/W	L23.74” x W23.74” x H2.13”
ESLTRF2440SR	20W–28W–34W–40W	3000K–3500K–4000K–5000K–6500K	6,000 Lumens	150 lm/W	L47.76” x W23.74” x H2.13”
ESLTRF2440SREM	20W–28W–34W–40W	3000K–3500K–4000K–5000K–6500K	6,000 Lumens	150 lm/W	L47.76” x W23.74” x H2.13”

Standard Voltage Electrical Load:

SYSTEM WATTS	120 VAC	208 VAC	240 VAC	277 VAC	INPUT VOLTAGE	INPUT FREQUENCY	POWER FACTOR	THD	OPERATING TEMP	SURGE PROTECTION	DIMMING
20	0.17	0.10	0.08	0.07	120–277 VAC	50/60 Hz	≥0.90	≤20%	-4°F to 113°F (-20°C to 45°C)	2.5kV	0–10V Dim-to-Off
28	0.23	0.13	0.12	0.10	120–277 VAC	50/60 Hz	≥0.90	≤20%	-4°F to 113°F (-20°C to 45°C)	2.5kV	0–10V Dim-to-Off
34	0.28	0.16	0.14	0.12	120–277 VAC	50/60 Hz	≥0.90	≤20%	-4°F to 113°F (-20°C to 45°C)	2.5kV	0–10V Dim-to-Off
40	0.33	0.19	0.17	0.14	120–277 VAC	50/60 Hz	≥0.90	≤20%	-4°F to 113°F (-20°C to 45°C)	2.5kV	0–10V Dim-to-Off

© 2026 ESL Vision, LLC - Rev: 10/06/26

Dimensions:

2X2 TROFFER

ESLTRF2240SR

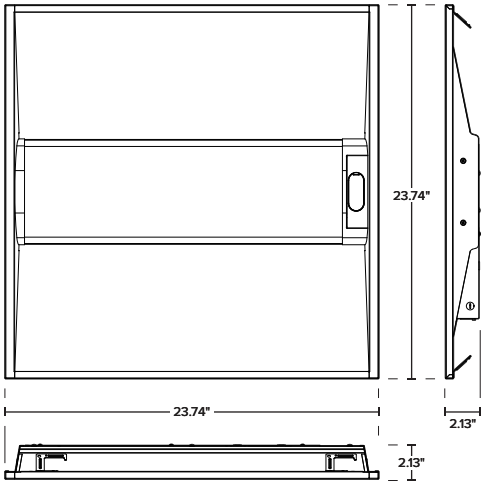

2X4 TROFFER

ESLTRF2440SR

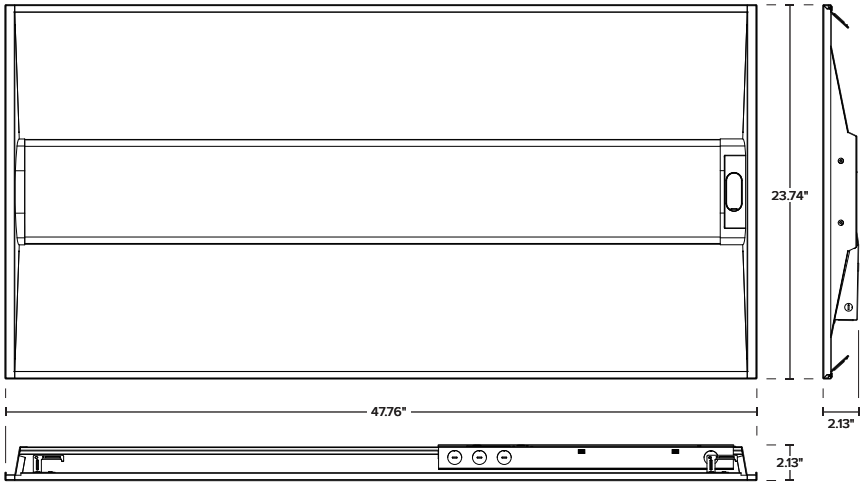

© 2026 ESL Vision, LLC - Rev: 10/06/26