250 Dove Court
Santa Paula, CA 93060 USA
Toll Free: (888) 262-3880
Tel: (805) 421-5114
quickjack.com

QuickJack™ Portable Car Jack

Setup and Operation Manual

Manual P/N 5900959 — Manual Revision L2 — Released October 2021

Models:

- BL-3500SLX BL-6000XLT
- BL-5000SLX BL-5000EXT
- BL-7000SLX BL-7000EXT

A video of how to set up your **QuickJack is available online**.

QuickJack is designed and engineered by BendPak Inc. in Southern California, USA. Made in China.

DANGER

Important Safety Instructions, Save These Instructions!

Read the *entire* contents of this manual ***before*** installing, operating, servicing, or maintaining this lift. Failure to follow the instructions and safety precautions in this manual can result in serious injury or death. Make sure all other operators also read this manual. Keep the manual near the product for future reference. By proceeding with setup and operation, you agree you fully understand the contents of this manual.

Manual. QuickJack™ Portable Car Jack, *Setup and Operation Manual*, P/N 5900959, Manual Revision L2, Released October 2021.

Copyright. Copyright © 2021 by BendPak Inc. All rights reserved. You may make copies of this document if you agree that: you will give full attribution to BendPak Inc., you will not make changes to the content, you do not gain any rights to this content, and you will not use the copies for commercial purposes.

Trademarks. BendPak and the BendPak logo are registered trademarks of BendPak Inc. QuickJack and JackPak are trademarks of BendPak Inc. All other company, product, and service names are used for identification only. All trademarks and registered trademarks are the property of their respective owners.

Limitations. Every effort has been made to ensure complete and accurate instructions are included in this manual. However, product updates, revisions, and/or changes may have occurred since this manual was published. BendPak reserves the right to change any information in this manual without incurring any obligation for equipment previously or subsequently sold. BendPak is not responsible for typographical errors in this manual.

Warranty. The QuickJack warranty is more than a commitment to you: it is also a commitment to the value of your new product. For full warranty details and to register your new QuickJack product, contact your nearest QuickJack dealer or visit **quickjack.com/warranty**.

Safety. Your new product was designed and manufactured with safety in mind. Your safety also depends on proper training and thoughtful operation. Do not set up, operate, maintain, or repair the unit without reading and understanding this manual and the labels on the unit.

Owner Responsibility. In order to maintain your product properly and to ensure operator safety, it is the responsibility of the product owner to read and follow these instructions:

- Follow all setup, operation, and maintenance instructions.
- Make sure product setup conforms to all applicable local, state, and federal codes, rules, and regulations, such as state and federal OSHA regulations and electrical codes.
- Consult a qualified person or organization to address any special regional structural and/or seismic requirements specified by any other agencies and/or codes such as the Uniform Building Code (UBC) and/or International Building Code (IBC).
- Read and follow all safety instructions. Keep them readily available for operators.
- Make sure all operators are properly trained, know how to safely operate the unit, and are properly supervised.
- Do not operate the product until you are certain that all parts are in place and operating correctly.
- Carefully inspect the product on a regular basis and perform all maintenance as required.
- Service and maintain the unit only with approved replacement parts.
- Keep all instructions permanently with the product and make sure all labels are clean and visible.
- **Only use this product if it can be used safely!**

Unit Information. Enter the Model Number, Serial Number, and the Date of Manufacture from the label on your unit. This information is required for part or warranty issues.

Model: _____

Serial: _____

Date of Manufacture: _____

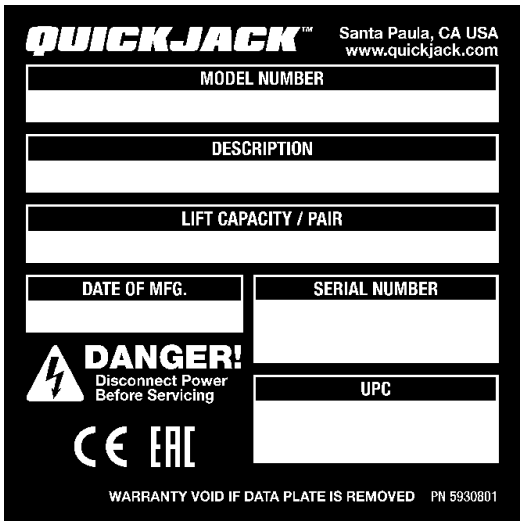

Table of Contents

Introduction 3
Shipping 5
Safety 5
Components 8
Accessories 10
Specifications 11
FAQ 13
Setup Checklist 14
Setup 15
Operation 35
Maintenance 48
Troubleshooting 50
Wiring Diagrams 52
Labels 54
Parts Sheets 57
CE Documentation 69
ALI Store 71

Introduction

This manual covers all models of the QuickJack portable car jack, which makes Vehicle maintenance in your garage or at the track fast and easy.

QuickJack models include:

- **BL-3500SLX**: Raises Vehicles up to 3,500 lbs. / 1,588 kg on a medium-length frame.
- **BL-5000SLX**: Raises Vehicles up to 5,000 lbs. / 2,267 kg on a longer frame.
- **BL-7000SLX**: Raises Vehicles up to 7,000 lbs. / 3,175 kg on a longer frame.
- **BL-5000EXT**: Raises Vehicles up to 5,000 lbs. / 2,267 kg on an extended frame.
- **BL-7000EXT**: Raises Vehicles up to 7,000 lbs. / 3,175 kg on an extended frame.
- **BL-6000XLT**: Raises Vehicles up to 6,000 lbs. / 2,721 kg on an extremely long frame.

All models are CE certified. This manual is mandatory reading for all QuickJack users, including anyone who sets it up, operates it, maintains it, or repairs it.

⚠ **DANGER** Be very careful when setting up, operating, maintaining, or repairing your unit; failure to do so could result in property damage, product damage, injury, or (in very rare cases) death. Make sure only authorized personnel operate the unit. All repairs must be performed by an authorized technician. Do not make modifications to the unit; this voids the warranty and increases the chances of injury or property damage. Make sure to read and follow the instructions on the labels on the unit.

Keep this manual on or near your QuickJack so that anyone who uses or services it can read it.

For technical support, visit **quickjack.com/support** or email QuickJack Technical Support at **support@quickjack.com**. You can also request parts (be sure to have the serial and model numbers of your unit available).

Important! Please Read

Only raise your QuickJack Frames with a Vehicle on them!

Why are we telling you to do it this way? Because your QuickJack Frames may occasionally become stuck up in the air if you raise them without the weight of a Vehicle. There is nothing wrong with them if this happens, and the issue can be quickly and easily fixed, it's just that they are designed and engineered to work with the weight of a Vehicle. ***Only raise your QuickJack Frames with a Vehicle on them***.

And since we have your attention...

Do *not* remove your Vehicle's tires then lower the QuickJack to the ground. The QuickJack requires space between the ground and your Vehicle to build up enough force to raise a Vehicle. It cannot raise a full load from a completely flat starting position.

Do Not Do This!

This is not a problem in normal operation, as the Vehicles you want to raise are being held well above the ground by their tires. The problem generally happens when people lower the QuickJack to a completely flat position with the Vehicle's tires removed.

What do you do if either of these problems happens to you? Refer to **Troubleshooting**.

Shipping

Your QuickJack was carefully checked before shipping. Nevertheless, you should thoroughly inspect the shipment ***before*** you sign to acknowledge that you received it.

When you sign the bill of lading, it tells the carrier that the items on the invoice were received in good condition. *To protect yourself, do not sign the bill of lading until **after** you have inspected the shipment.* If any of the items listed on the bill of lading are missing or are damaged, do not accept the shipment until the carrier makes a notation on the bill of lading that lists the missing and/or damaged goods.

If you discover missing or damaged goods ***after*** you receive the shipment and have signed the bill of lading, notify the carrier at once and request the carrier to make an inspection. If the carrier will not make an inspection, prepare a signed statement to the effect that you have notified the carrier (on a specific date) and that the carrier has failed to comply with your request.

It is difficult to collect for loss or damage after you have given the carrier a signed bill of lading. If this happens to you, file a claim with the carrier promptly. Support your claim with copies of the bill of lading, freight bill, invoice, and photographs, if available. Our willingness to assist in helping you process your claim does not make us responsible for collection of claims or replacement of lost or damaged materials.

Safety

Refer to ANSI/ALI ALIS Standard (R2015) *Safety Requirements for Installation and Service of Automotive Lifts* for more information about safely installing your QuickJack.

⚠ **WARNING** **California Proposition 65**: This product can expose you to chemicals including styrene and vinyl chloride which are on the list of over 900 chemicals identified by the State of California to cause cancer, birth defects or reproductive harm. Always use this product in accordance with BendPak's instructions. For more information, visit **www.p65warnings.ca.gov**.

Important Safety Instructions

When using your garage equipment, basic safety precautions should always be followed, including:

1. Read all instructions.
2. Do not touch hot parts; you could be burned. Always use care with the equipment.
3. Do not operate equipment with a damaged cord or if the equipment has been dropped or damaged — until it has been examined by a qualified service person.
4. Do not let a cord hang over the edge of a table, bench, or counter or come in contact with hot manifolds or moving fan blades.
5. If an extension cord is necessary, a cord with a current rating equal to or greater than that of the equipment should be used. Cords rated for less current than the equipment may overheat. Care should be taken to arrange the cord so that it will not be tripped over or pulled.
6. Always unplug equipment from electrical outlet when not in use. Never use the cord to pull the plug from the outlet. Grasp plug and pull to disconnect.

7. Let equipment cool completely before putting away. Loop cord loosely around equipment when storing.
8. To reduce the risk of fire, do not operate equipment in the vicinity of open containers of flammable liquids (gasoline).
9. Adequate ventilation should be provided when working on operating internal combustion engines.
10. Keep hair, loose clothing, fingers, and all parts of your body away from moving parts.
11. To reduce the risk of electric shock, do not use on wet surfaces or expose to rain.
12. Use only as described in this manual. Use only manufacturer's recommended attachments.
13. Always wear safety glasses. Everyday glasses only have impact resistant lenses, they are not safety glasses.
14. To reduce the risk of injury, close supervision is necessary when this product will be used around children.
15. To reduce the risk of injury, never overload the drawers or shelves. Refer to loading instructions.
16. To reduce the risk of electric shock or fire, never overload receptacles. Refer to markings for the proper load on receptacles.

Save these instructions!

QuickJack Safety Information

Please note the following:

- The product is a portable car jack. Use it only for its intended purpose.
- Read this manual thoroughly before installing, operating, servicing, or maintaining your QuickJack.
- The product should only be operated by authorized personnel.
- Do not make any modifications to the product.
- ***QuickJack is approved for indoor installation and use only***. Outdoor installation is prohibited. Your QuickJack is portable, however, so if you end up taking it outdoors, remember to protect it from the weather (for example, from falling rain, sleet, and snow).
- Never exceed the rated capacity of the jack.
- Make sure all operators read and understand this *Setup and Operation Manual*. Keep the manual near the device at all times.
- Do not use the product while tired or under the influence of drugs, alcohol, or medication.
- Make a visual inspection of the product before using it ***each time***. Check for damage or missing parts. Do not use the product if you find any of these issues. Instead, stop using it, then contact QuickJack at **quickjack.com/support** or **support@quickjack.com**.
- Make a ***thorough*** inspection of the product at least once a year. Replace any damaged or severely worn electrical cables, Hydraulic Hoses, decals, or warning labels. Do not use the product until damaged or worn items have been replaced.
- You ***must*** wear OSHA-approved (publication 3151) personal protective equipment at all times when installing, using, maintaining, or repairing the QuickJack: leather gloves, steel-toed work boots, eye protection, back belts, and hearing protection.
- Remove all jewelry while working with the product. Dangling jewelry can get caught in moving parts; metal jewelry can conduct electricity. Avoid wearing loose-fitting clothing.
- While handling a Hydraulic Cylinder or a Hydraulic Hose, also wear gloves. In rare cases, a needle-like stream of hydraulic fluid (even at low pressure) can penetrate fingers, hands, or arms; such a

puncture can feel like a bite, electric shock, or a prick. While it may seem like a minor issue, any amount of Hydraulic Fluid injected into the human body is a serious issue. Anyone suffering such a puncture wound should be ***immediately*** taken to a hospital emergency room to determine the extent of the injury. Explain the circumstances of the injury to the attending physician, including what kind of Hydraulic Fluid was involved. Do not assume a puncture wound that could have been caused by Hydraulic Fluid is a minor issue; it could be life threatening.

- Floor surface must be dry, flat, and have a minimum compressive strength of 500 PSI.
- Avoid using an extension cord; they can overheat. If you must use an extension cord, make sure it is No. 14 AWG minimum.
- Take care locating the electrical cable and Hydraulic Hoses; you do not want them driven over or stepped on.
- Clear the area if a Vehicle is in danger of falling off the jack.
- ***Make sure both Lock Bars are engaged before nearing an elevated Vehicle.***
- *As an added precaution, you must* ***always*** *use auxiliary safety stands under the Vehicle while elevated on both QuickJack Frames.*

Symbols

Following are the symbols used in this manual:

⚠ **DANGER**	Calls attention to an immediate hazard that ***will*** result in death or severe injury.
⚠ **WARNING**	Calls attention to a hazard or unsafe practice that ***could*** result in death or severe personal injury.
⚠ **CAUTION**	Calls attention to a hazard or unsafe practice that could result in minor personal injury, product, or property damage.
Tip	Calls attention to information that can help you use your QuickJack better.

Liability Information

BendPak assumes **no** liability for damages resulting from:

- Use of the equipment for purposes other than those described in this manual.
- Modifications to the equipment without prior, written permission from BendPak.
- Injury or death caused by modifying, disabling, overriding, or removing safety features.
- Damage to the equipment from external influences.
- Incorrect operation of the equipment.

Components

QuickJack components include:

- **Two QuickJack Frames**. The Frames, working together, raise and lower Vehicles.

  The two Frames are ***not*** interchangeable. The Lock Bars, described below, must be on the **outside** when you orient the Frames.

  Your QuickJack has a left Frame and a right Frame. If you put your QuickJack Frames next to each other with both Lock Bars on the outside and the end with the sticker away from you, then the Frame on your left is the "left" Frame and the Frame on your right is the "right" Frame.

  These are the orientations noted on the boxes the QuickJack Frames are shipped in and they are also shown in the drawing in **Unpacking**.

- **Eight rubber Lift Blocks**. Four are medium height (2 inches) and four are tall (3 inches high). The Lift Blocks can be placed in different locations in the Receiver Trays, allowing you to hit the factory-recommended Lifting Points on a wide variety of Vehicles. *Always use Lift Blocks; do not raise a Vehicle on just the QuickJack Frames.*

  Note: You can stack one medium and one tall block together, but not more than that.

  If you have a Vehicle with a unibody/pinch-weld frame, QuickJack recommends ordering optional Pinch-Weld Blocks, **available on the QuickJack website**. If you have an SUV or truck, there is an SUV and Light Truck Adapter available for these Vehicles, also on the QuickJack website.

  If you are going to be raising Vehicles with very low ground clearance, low-profile Lift Blocks are available as **Accessories**.

- **One Power Unit** (includes Pendant Control). *Not shown*. Provides power to the QuickJack Frames. There are five Power Units available: 110 VAC, 220/240 VAC, CE-approved 220 VAC, 12 VDC, and CE-approved 12 VDC. Note that the Hydraulic Fluid reservoir of your Power Unit is shipped ***without*** Hydraulic Fluid; you ***must*** fill it with approved fluid ***before*** using your QuickJack.
- **Two Short Hydraulic Hoses**. Connect on one end to the Hydraulic Cylinder on each Frame and on the other end to one of the Long Hydraulic Hoses. Note that the Short Hydraulic Hoses ***must*** be routed **under** the bottom of the Frame, *never over the Frame*.
- **Two Long Hydraulic Hoses**. Connect on one end to the Power Unit and on the other end to one of the Short Hydraulic Hoses.

Tip To move your QuickJack components: disconnect the Long Hydraulic Hoses either at the Power Unit or at the Short Hydraulic Hoses. This is easier than trying to move the QuickJack with all components connected.

- **Parts Bag**. Holds Hydraulic Fittings used during setup.
- **Two Frame Positioning Handles**. Used to easily move the QuickJack Frames, usually to position the Frames under the Vehicle's factory-recommended Lifting Points.
- **Lock Bars**. The two Lock Bars, one on each QuickJack Frame, hold the Frames in position when they are raised—at either the First Locking Position or the Top Locking Position.

  Only leave the QuickJack either fully lowered or engaged on one of the two locking positions.

  Before using the QuickJack, check to make sure both Lock Bars are moving freely and are in their tracks. If the Lock Bars get stuck in an up position or they come out of their tracks, the QuickJack will not work correctly, which is a safety hazard.

- **Hydraulic Cylinder** and **Air Cylinder**. Each QuickJack Frame has one Hydraulic Cylinder and one Air Cylinder. The Hydraulic Cylinder is welded to the Frame and the Air Cylinder is welded to the Hydraulic Cylinder. The Hydraulic Cylinder receives Hydraulic Fluid from the Power Unit, which is used to move the Frames up and down. The Air Cylinder acts like an air spring, which means they assist in lowering the Frames. The Hydraulic Cylinders need Hydraulic Fluid to operate, the Air Cylinders need to be pressurized from 40 to 50 PSI (2.75 to 3.4 BAR); **do not exceed 50 PSI**.
- **Wheels**. The two Wheels on the non-sticker end of each QuickJack Frame allow you to easily move the Frame to a different location. Note that the Wheels and the weight of the Frame can leave marks on some floors, so be careful using them.
- **Handles**. On the sticker end of each QuickJack Frame is an opening that can be used as a Handle when you are moving the Frame. To pick up a Frame by its Handle, with one hand raise the Frame just off the ground under the large yellow sticker, then put the other hand in the Handle and continue to raise the Frame.

⚠ **WARNING** Be very careful when putting down the Frame; you do not want to crush your fingers.

The following image shows the main components of a QuickJack.

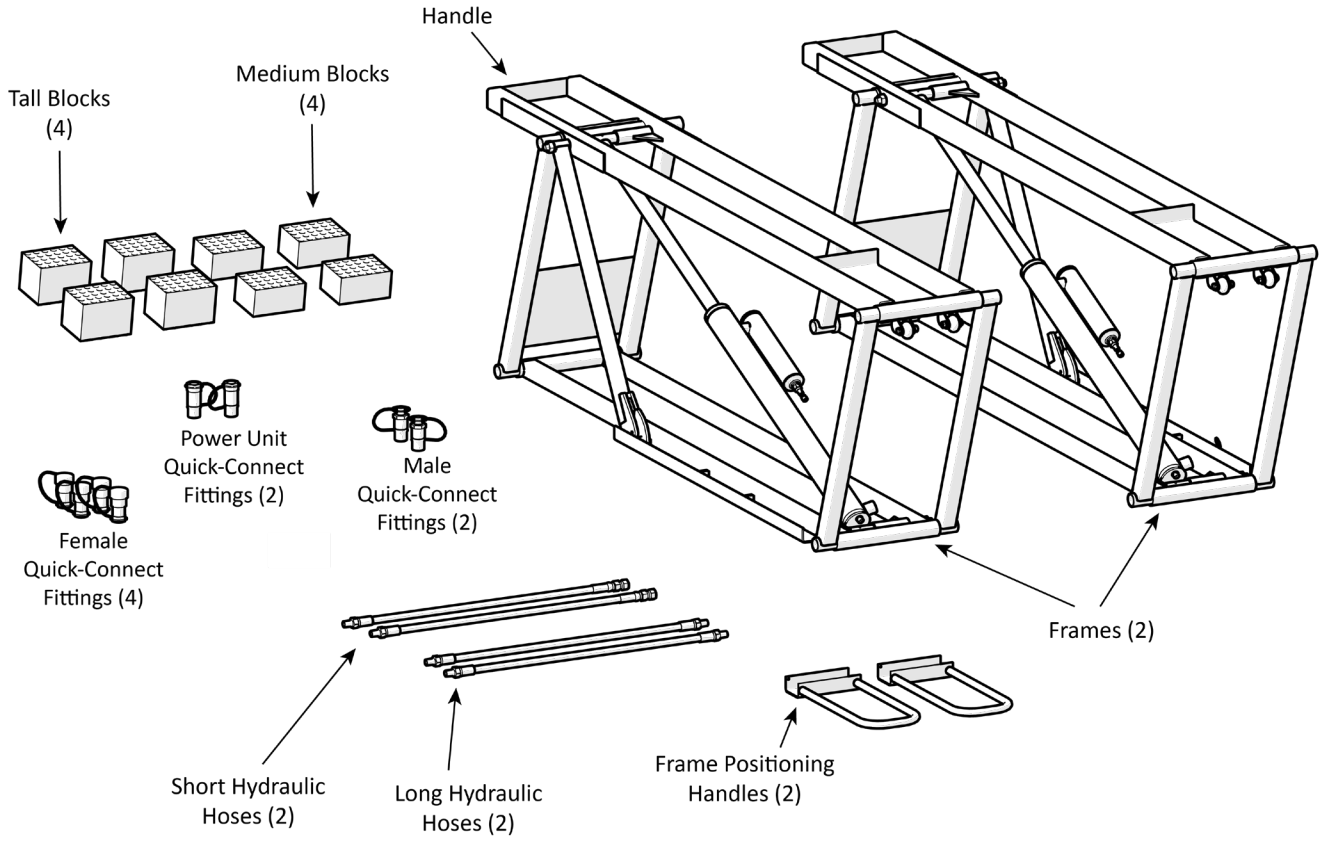

Accessories

SUV and Light Truck Adapter Kit

The optional SUV and Light Truck Adapter Kit increases the service capability of your QuickJack by providing stackable Lift Blocks that mount inside the Receiver Trays.

The Adapter Kit is available for Models BL-5000SLX/EXT and BL-7000SLX/EXT.

The Adapter Kit includes:

- Four low-profile, round Contact Pads
- Four Bases that accommodate the Contact Pads and the Extenders
- Four 3-inch Extenders that raise the Contact Pads

Visit the **Accessories page of the QuickJack website** for more information.

SLX Frame Extension Kit

The SLX Frame Extension Kit is a pair of QuickJack frame extenders that increase the lift-point spread for **BL-5000SLX** and **BL-7000SLX** models by 6 inches, for a total lift point spread of 66 inches. They fit snugly into your QuickJack with no setup required and can be easily taken off and put back on, depending on what Vehicle you are raising.

Visit the **Accessories page of the QuickJack website** for more information.

Motorcycle Lift Adapter Kit

The Motorcycle Lift Adapter Kit lets you add a platform on top of your QuickJack Frames, converting it into a motorcycle lift. This product is not CE certified.

The Adapter Kit includes a tread plate, heavy-duty tie-down rings, a support axle, a large clamp with treaded-rubber padding, and an easy-to-use crank for wheel security.

Visit the **Accessories page of the QuickJack website** for more information.

Ranger RML-1100 Motorcycle Jack

The Ranger RML-1100 Motorcycle Jack is ideal for servicing motorcycles and ATVs up to 1,100 pounds / 499 kg. It is the perfect accessory for the QuickJack Motorcycle Lift Adapter Kit. This product is not CE certified.

Visit the **Accessories page of the QuickJack website** for more information.

JackPak

The portable JackPak lets you add air to the Air Cylinders on each QuickJack Frame. It also includes additional features for roadside assistance and emergencies.

Refer to **jackpak.com** for more information.

Specifications

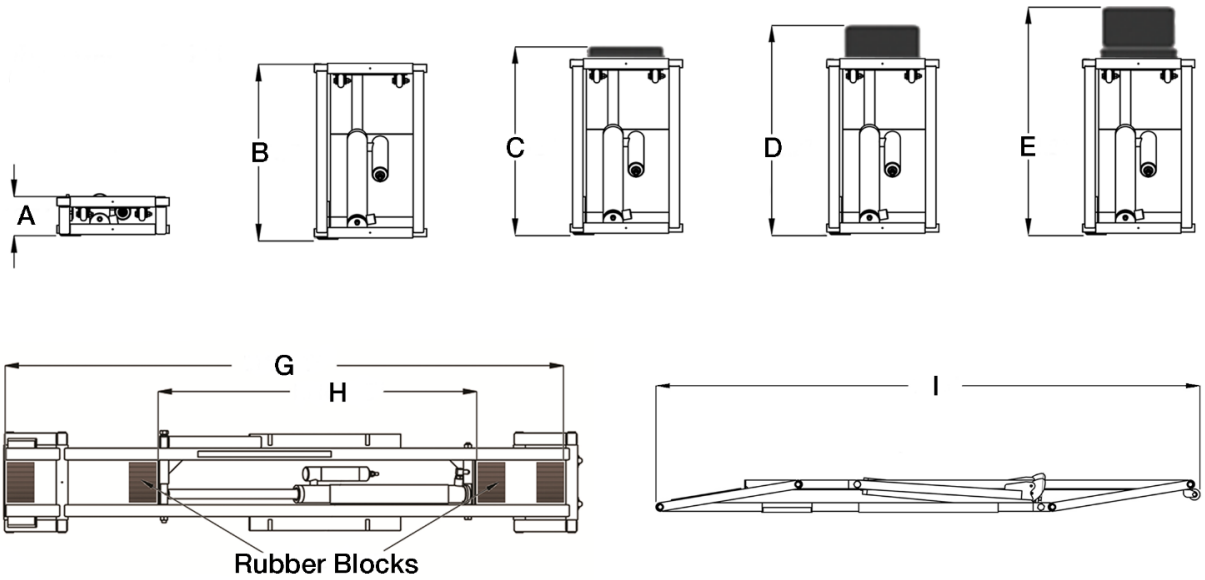

Model	BL-3500SLX	BL-5000SLX	BL-7000SLX
Lifting capacity	3,500 lbs / 1,588 kg	5,000 lbs / 2,268 kg	7,000 lbs / 3,175
A Lowered height (frame only)	3" / 76 mm	3" / 76 mm	3.6" / 91 mm
B Height, frame only *	16.5" / 419 mm	17.5" / 440 mm	18" / 457 mm
C Height, 2" blocks	17" / 432 mm	18.4" / 460 mm	18.6" / 471 mm
D Height, 3" blocks	18.5" / 470 mm	19.2" / 480 mm	19.4" / 493 mm
E Height, stacked blocks	20" / 508 mm	21" / 534 mm	21.25" / 540 mm
F Frame width	10.6" / 268 mm	11" / 278 mm	12.5" / 318 mm
G Max lifting point spread	50.5" / 1,283 mm	60" / 1,517 mm	60" / 1,524 mm
H Min lifting point spread	26.7" / 678 mm	29.5" / 801 mm	29.5" / 749 mm
I Frame length	62" / 1,575 mm	70" / 1,778 mm	70" / 1,778 mm
Individual frame weight	60 lbs / 27 kg	78 lbs / 35 kg	96 lbs / 44 kg
Power unit weight (no fluid)	35 lbs / 16 kg	35 lbs / 16 kg	35 lbs / 16 kg
Power Unit PRV setting	1,980 PSI	1,980 PSI	1,980 PSI
Sound (when raising/lowering)	<70 dBA	<70 dBA	<70 dBA
Maximum allowed wind speed	<60 mph / <96.5 kph	<60 mph / <96.5 kph	<60 mph / <96.5 kph

***** For reference purposes only; ***do not*** raise a Vehicle without Lift Blocks.

Height values may be .25 in / 7 mm different if measurement done with mechanism at full rise or on top lock.

Measurements may be up to 3 percent different based on amount of weight on lift, weight distribution, and manufacturing tolerances.

Specifications are subject to change without notice.

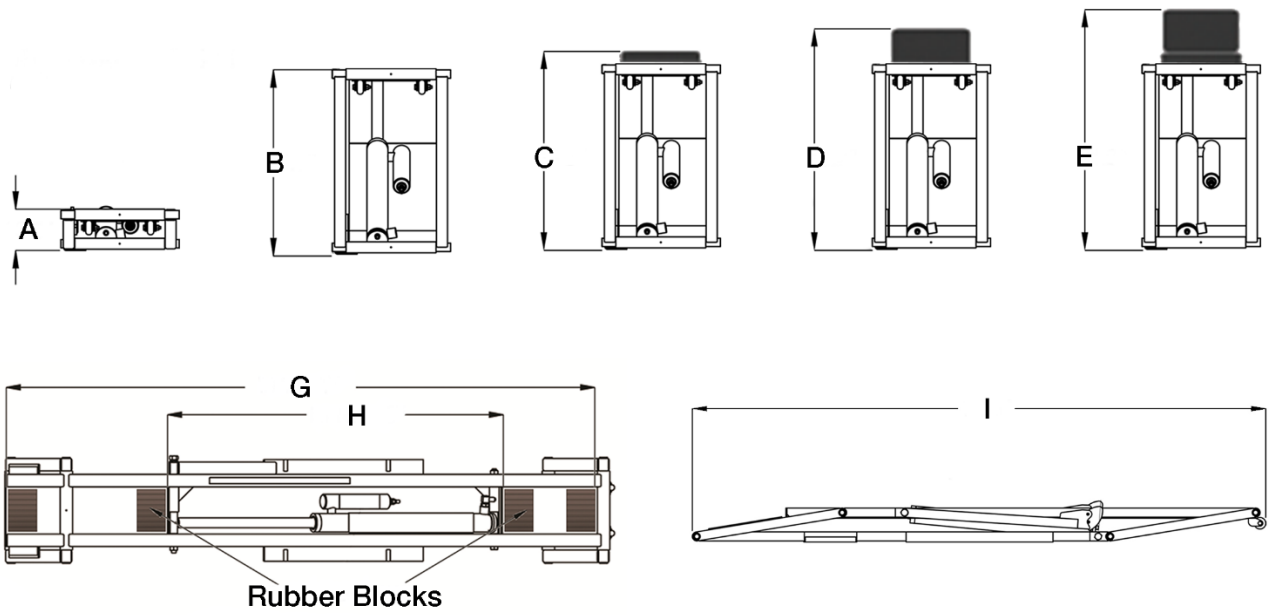

Model	**BL-6000XLT**	**BL-5000EXT**	**BL-7000EXT**
Lifting capacity per pair	6,000 lbs / 2,722 kg	5,000 lbs / 2,268 kg	7,000 lbs / 3,175 kg
A Collapsed height	3.6" / 91 mm	3" / 76 mm	3.6" / 91 mm
B Height, no blocks *	18.2" / 462 mm	17.6" / 447 mm	18.2" / 462 mm
C Height, small blocks	18.6" / 471 mm	18.4" / 467 mm	18.6" / 471 mm
D Height, tall blocks	19.4" / 493 mm	19.2" / 487 mm	19.4" / 493 mm
E Height, stacked blocks	21.6" / 548 mm	21.3" / 542 mm	21.6" / 548 mm
F Frame width	12.5" / 318 mm	11" / 278 mm	12.5" / 318 mm
G Block position, max spread	75.8" / 1,926 mm	66" / 1,676 mm	66" / 1,676 mm
H Block position, min spread	47.4" / 1,205 mm	37.4" / 951 mm	37.4" / 951 mm
I Frame length	86" / 2,185 mm	75" / 1,905 mm	76" / 1,930 mm
Individual frame weight	110 lbs / 50 kg	80 lbs / 36 kg	101 lbs / 46 kg
Power unit weight	35 lbs / 16 kg	35 lbs / 16 kg	35 lbs / 16 kg
Power Unit PRV setting	1,980 PSI	1,980 PSI	1,980 PSI
Sound (when raising/lowering)	<70 dBA	<70 dBA	<70 dBA
Maximum allowed wind speed	<60 mph / <96.5 kph	<60 mph / <96.5 kph	<60 mph / <96.5 kph

***** For reference purposes only; ***do not*** raise a Vehicle without Lift Blocks.

Height values may be .25 in / 7 mm different if measurement done with mechanism at full rise or on top lock.

Measurements may be up to 3 percent different based on amount of weight on lift, weight distribution, and manufacturing tolerances.

Specifications are subject to change without notice.

Frequently Asked Questions

Question: What kinds of Vehicles can I raise using my QuickJack?

Answer: A wide variety. The two main criteria are: is the Vehicle under the weight capacity of your QuickJack and do the QuickJack's Lift Blocks hit the Vehicle's factory-recommended Lifting Points? If the answers are yes, and for most Vehicles the answers are yes, then you can raise the Vehicle.

Q: What if I want to raise a Vehicle that is slightly over the weight capacity of my QuickJack?

A: This is not an intended use of the product. We strongly recommend against trying to raise a Vehicle that is heavier than the rated capacity of your QuickJack.

Q: How many locking positions does my QuickJack have?

A: Two. We call them the First Locking Position and the Top Locking Position.

Q: Do the QuickJack Frames have a "left" and "right" orientation?

A: Yes. If you put your QuickJack Frames next to each other with both Lock Bars on the outside and the *end with the sticker away from you*, then the Frame on the left is the "left" Frame and the Frame on the right is the "right" Frame. These are the orientations noted on the QuickJack shipping boxes.

Q: Can I use my QuickJack outdoors?

A: No. The QuickJack is approved for indoor installation and use only. ***Outdoor installation is prohibited***. Your QuickJack is portable, however, so if you end up taking it outdoors, remember to protect it from the weather (for example, from falling dirt, rain, sleet, and snow).

Q: Can I drive on the QuickJack Frames?

A: A Vehicle can be ***above*** your QuickJack Frames (this is normal operation, in fact), but ***do not*** drive a Vehicle ***on*** the QuickJack Frames or the Hydraulic Hoses; this damages them.

Q: What happens if I raise a Vehicle on my QuickJack but ***do not*** leave it in a locked position?

A: First, do not do this; it is a safety hazard. Second, because the QuickJack is not in a locked position, the weight of the Vehicle will eventually lower it to the ground. Always follow this rule: **if you raise a Vehicle, engage it on a locking position or lower it back to the ground.**

Q: How long can I leave a Vehicle raised on my QuickJack?

A: As long as you want, ***if it is engaged on a locking position***. Once your QuickJack is engaged on one of its two locking positions, gravity holds it in place; a loss of power or leaking Hydraulic Fluid would **not** cause the QuickJack to lower.

Q: Anything else I should know about my QuickJack?

A: Two things. First, ***do not raise your QuickJack Frames to full height with no Vehicle on it***. QuickJack Frames are built to hold the weight of a Vehicle; they may get stuck at full rise if there is no weight on them. *Always raise your QuickJack Frames with a Vehicle on them*. Second, do not try to raise a Vehicle from no net rise (meaning, if you lower the QuickJack Frames to the ground while the Vehicle's tires are removed). QuickJack needs some space to build up enough force to raise a Vehicle.

Q: What is "longitudinal shift"?

A: When you raise the QuickJack, the geometry of the Frames causes the Platforms to move up at a sllight angle instead of straight up. The difference between where the Platforms are while on the ground and where they end up when raised is longitudinal shift. Longitudinal shift for the QuickJack is from 11 to 14 inches in the direction of the sticker end of the Frames, depending on model. It does not matter which way the Vehicle is facing, longitudinal shift is always the same direction.

Setup Checklist

Following are the steps needed to install a QuickJack. Perform them in the order shown.

☐ 1. Review the setup Safety Rules.

☐ 2. Make sure you have the necessary Tools.

☐ 3. Select the setup Site.

☐ 4. Unpack the Components that came with the QuickJack.

☐ 5. Make sure there is adequate Clearance on all sides and above.

☐ 6. Locate the QuickJack Box 3.

☐ 7. Locate and examine the Air and Hydraulic Cylinders.

☐ 8. Install the Hydraulic Elbow Fittings.

☐ 9. Learn about Thread Sealants.

☐ 10. Prepare the Short Hydraulic Hoses.

☐ 11. Understand Quick-Connect Fittings

☐ 12. Prepare and connect the Long Hydraulic Hoses.

☐ 13. Pressurize the Air Cylinders.

☐ 14. Find a location for the Power Unit.

☐ 15. Install the Hydraulic Fittings on the Power Unit.

☐ 16. Connect the Power Unit to a Power Source.

☐ 17. Fill the Hydraulic Fluid Reservoir.

☐ 18. Check the Breather Valve.

☐ 19. Connect the Hydraulic Hoses.

☐ 20. Bleed the Hydraulic Cylinders.

☐ 21. Review the Final Checklist.

☐ 22. Test the QuickJack.

☐ 23. Leave the Manual for the owner/operator.

Setup

This section describes how to set up your QuickJack.

⚠ **WARNING** ***Use only the factory-supplied parts that came with your QuickJack***. If you use parts from a different source, you void your warranty and compromise the safety of everyone who sets up or uses the QuickJack. If you are missing parts, visit **quickjack.com/support** or contact QuickJack Technical Support at **support@quickjack.com**, (888) 262-3880, or (805) 933-9970.

Your QuickJack is supplied with setup instructions that meet the criteria set by the American National Standard "Automotive Lifts – Safety Requirements for Construction, Testing, and Validation" ANSI/ALI ALCTV-2011.

Setup Safety Rules

When setting up a QuickJack, your safety depends on proper training and thoughtful operation.

⚠ **WARNING** Always use proper tools, such as a forklift or shop crane, to move heavy components. Do not install this equipment without reading and understanding this manual and the labels on the unit.

BendPak recommends referring to the ANSI/ALI ALIS Standard (R2015) *Safety Requirements for Installation and Service* for more information about safely setting up, using, and servicing your QuickJack.

Pay attention at all times during setup. Use appropriate tools and equipment. Stay clear of moving parts. Keep hands and fingers away from pinch points.

⚠ **WARNING** You must wear protective equipment at all times during setup: leather gloves, steel-toed work boots, eye protection, back belts, and hearing protection.

Tools

You need the following tools to set up your QuickJack:

- SAE / metric hex key set
- SAE / metric socket and ratchet set
- SAE / metric wrench set or an adjustable wrench
- Screwdriver set

Tip Keep a rag handy during setup; Hydraulic Fluid sometimes leaks.

At some point during setup, you will need to provide some air pressure (to 50 PSI, for the Air Cylinder) and 2.1 quarts / 2 liters of Hydraulic Fluid.

Selecting a Site

Keep the following in mind when selecting a site for your QuickJack:

- **Enough space**. Make sure there is adequate space for the QuickJack and the Vehicles you will be raising.
- **Longitudinal Shift**. When you raise your QuickJack with a Vehicle on it, the geometry of the Frames moves the Vehicle up at a slight angle, towards the sticker end of the QuickJack; refer to the graphic in **Unpacking**. Radial shift is always towards the sticker end of the QuickJack, no matter which way the Vehicle is facing.

  Radial shift can be anywhere from 11 to 15 inches, depending on QuickJack model.

  Make sure to account for radial shift when choosing where to set up and use your QuickJack.
- **No overhead obstructions**. Make sure your site is free of overhead obstructions such as heaters, building supports, electrical lines, low-hanging lights, and so on. We recommend leaving at least three feet above the top of the Vehicle when raised on the QuickJack.
- **Level floor**. Inspect the floor and check for defective concrete or asphalt. Make sure the floor is dry, level, and has a minimum compressive strength of 500 psi.
- **Power in the right place**. You will need to have a power source for your Power Unit. If you are using 110 or 220/240 VAC power, the Power Unit must be close enough to the power source for the cord to reach.

  If you are using a 12 VDC power source, the Power Unit must be close enough to the power source for your connection method to reach. For example, if you are powering your 12 VDC Power Unit with a Vehicle Battery, the Power Unit must be within reach of the Jumper Cables attached to the Vehicle's Battery.

⚠ **WARNING** Do not set up or use a QuickJack on a surface with 3° of slope or more, as this could lead to personal injury or death if a raised Vehicle were to fall off the QuickJack. The greater the slope, the more likely the Vehicle will become unbalanced and fall off the QuickJack, which could damage the Vehicle and injure anyone in the area.

Unpacking

Open the boxes and arrange the QuickJack components where you will be setting them up.

⚠ **WARNING** Your two QuickJack Frames are similar, but they are ***not*** interchangeable. Always line up your Frames as parallel to each other as the Lifting Points will allow, with the ***Lock Bars on the outside***, as shown below.

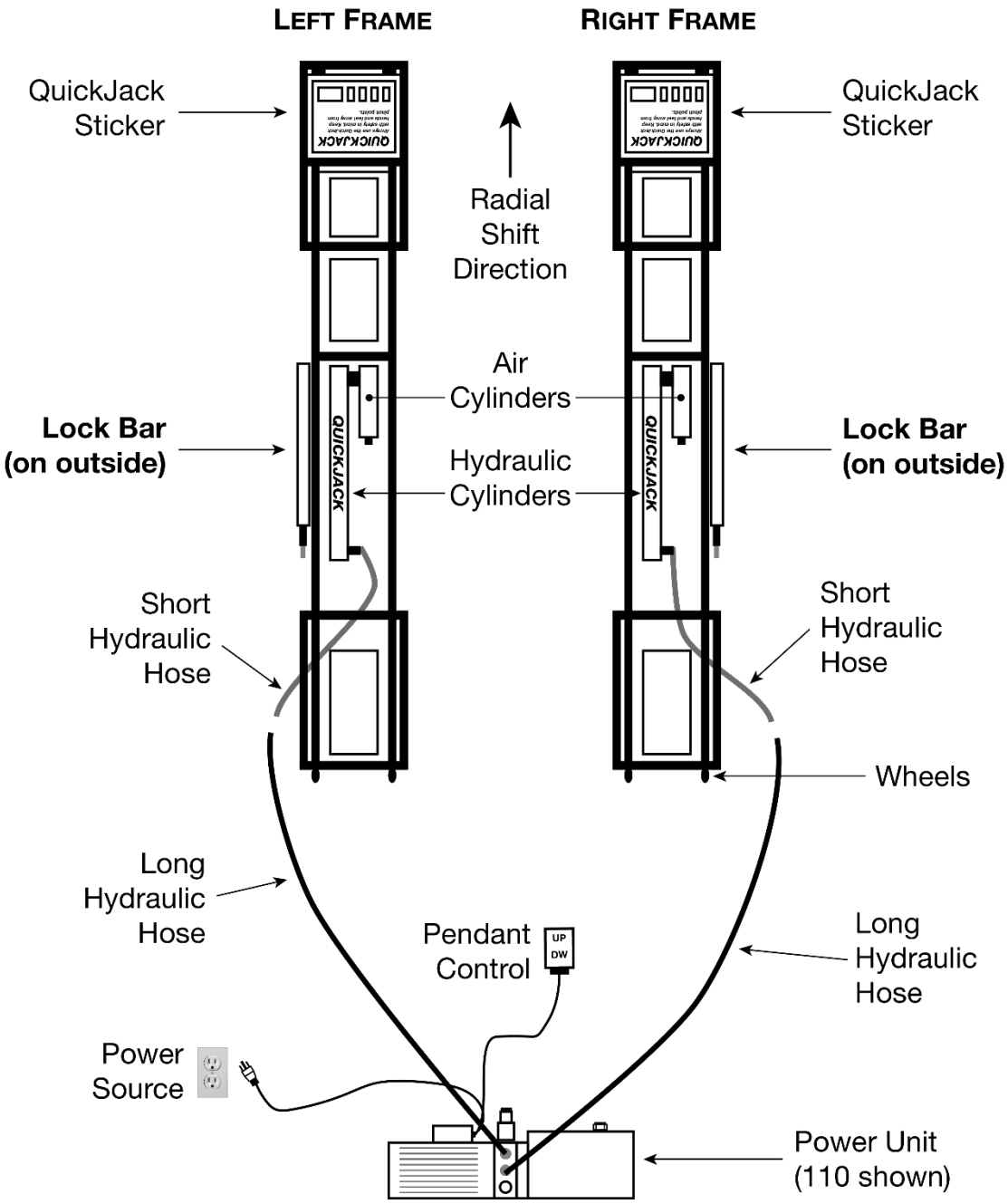

⚠ **CAUTION** Be sure to route the Short Hydraulic Hoses ***under*** the QuickJack Frames. If they are routed over the QuickJack Frames, the QuickJack will not work correctly and the Hoses could be damaged.

Clearances

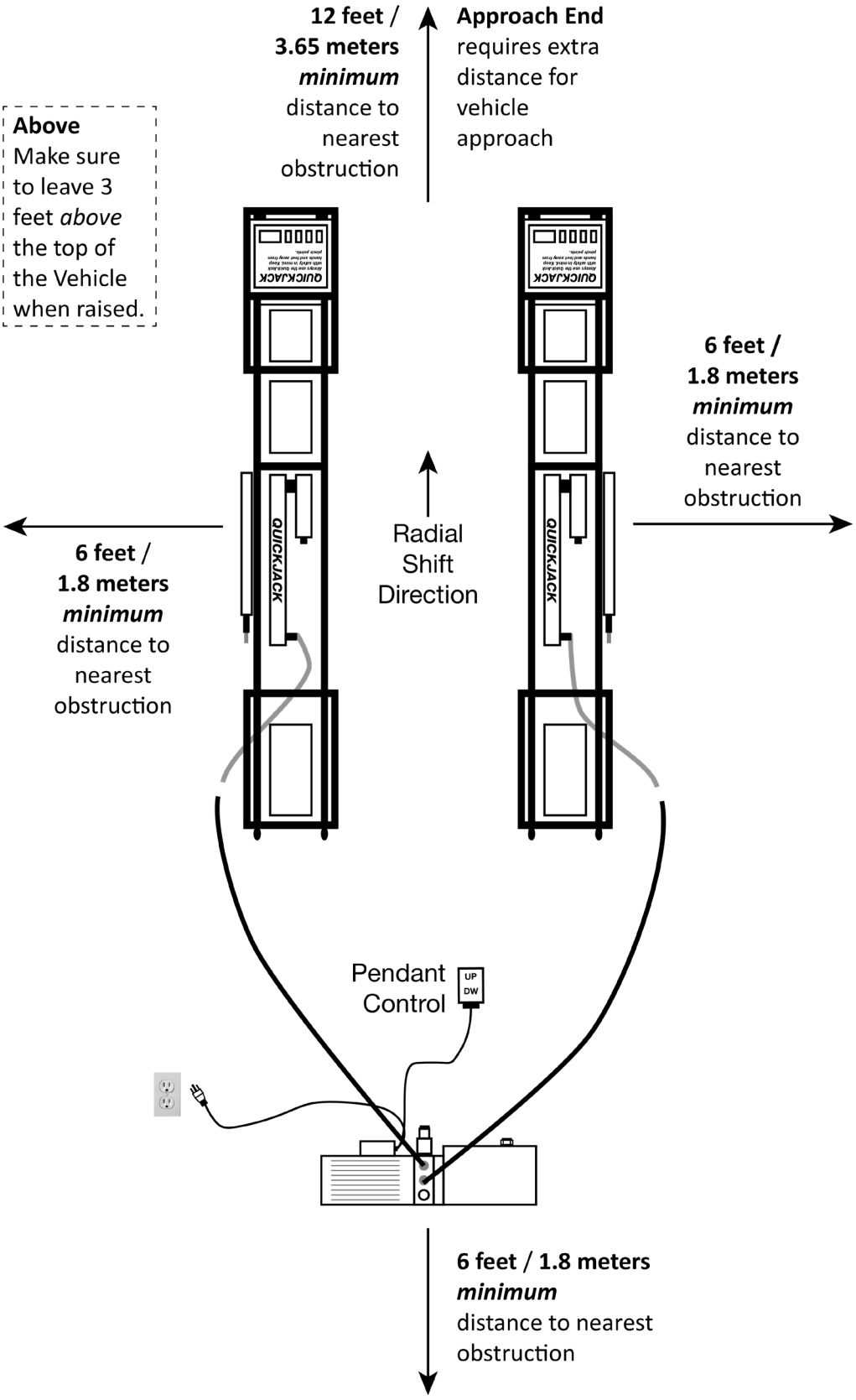

Not necessarily to scale. Not all components shown. Vehicle approach must be opposite Power Unit. Do not drive Vehicle on Hydraulic Hoses, Power Unit, or QuickJack Frames.

QuickJack Box 3 (and Parts Bag)

Many of the items you will be using during initial setup come in Box 3; the Parts Bag is included in Box 3.

The **QuickJack Box 3** includes:

- A Power Unit (Voltage of your choice, decided at time of purchase)
- Four Medium Rubber Lift Blocks and Four Tall Rubber Lift Blocks
- Two Short Hydraulic Hoses and Two Long Hydraulic Hoses

The **QuickJack Parts Bag** includes:

- Four Female Quick-Connect Fittings
- Two Male Quick-Connect Fittings
- Two Power Unit Quick-Connect Fittings
- Two Hydraulic Elbow Fittings
- Bottle of Liquid Thread Sealant

Air and Hydraulic Cylinders

Each QuickJack Frame has one Air Cylinder and one Hydraulic Cylinder.

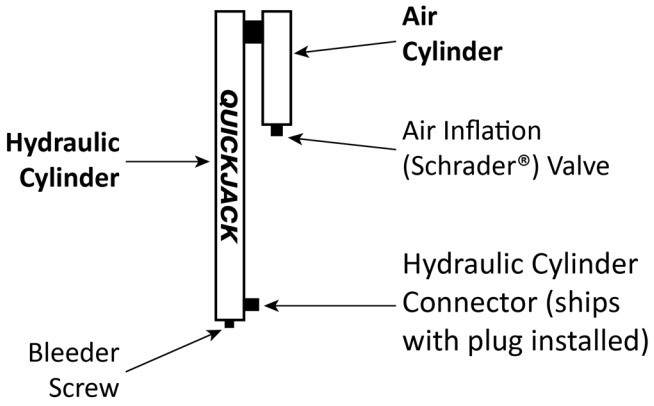

The components of the Air and Hydraulic Cylinders are:

- **Air Inflation Valve**. Used to add air pressure to the Air Cylinder. Comes with the appropriate valve (also called a Schrader® valve) installed.
- **Hydraulic Cylinder Connector**. Hydraulic Elbow Fitting attaches here. Use a 6 mm hex key to remove the shipping plug before installing the Hydraulic Elbow Fitting.

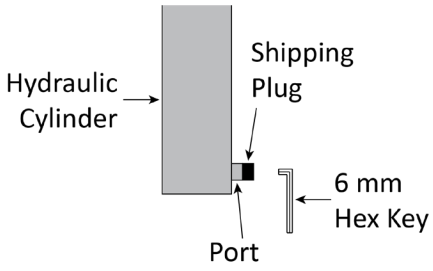

- **Bleeder Screw**. Used to “bleed” the air from the Hydraulic System, if necessary. Refer to **Troubleshooting** for more information.

Installing the Hydraulic Elbow Fittings

You need to install one Hydraulic Elbow Fitting (P/N 5550103) on each Hydraulic Cylinder.

To install a Hydraulic Elbow Fitting:

1. *Remove the shipping plug* from the Hydraulic Cylinder Port using a 6 mm hex key.

Hydraulic Elbow Fitting

O-Ring end. Connects to Port on Hydraulic Cylinder.

Threaded end. Connects to Female end of Short Hydraulic Hose.

2. Get a Hydraulic Elbow Fitting from the Parts Bag; screw the O-ring fitting end into the Hydraulic Cylinder Port.

Tip Raising the QuickJack Frame and putting a Lift Block under it or manually raising the Platform to a locking position can provide a little bit of extra room, making it easier to secure the Hydraulic Elbow Fitting.

Important: Do ***not*** use Thread Sealant on either end of the Hydraulic Elbow Fitting.

3. Position the threaded fitting end as shown above; accessible but not pointed up.

   You want the threaded fitting end accessible but ***not*** pointed **up**, as the Short Hydraulic Hose would then angle up and could possibly impact the underside of a Vehicle.

4. Tighten the fitting nut until fully snug.
5. Perform the same process for the Hydraulic Cylinder on the other QuickJack Frame.

About Thread Sealants

Your QuickJack comes with a bottle of Liquid Thread Sealant. Thread Sealant lubricates and fills the gaps between the Fitting threads, and leaves no residue that could contaminate the Hydraulic Fluid.

When Hydraulic Fittings are assembled and tightened properly, there should be no Hydraulic Fluid leaks during equipment operation and no internal fluid contamination to disrupt the performance of your QuickJack.

The same goes for Thread Seal Tape (like Teflon® Tape) or Liquid TPFE (Thread Sealer). Both are approved Thread Sealants for QuickJack, and if used correctly, there should be no evidence of Hydraulic Fluid leaks during equipment operation or Hydraulic Fluid contamination that could cause equipment malfunction.

To apply Thread Sealant:

1. Make sure the Fittings and connectors you are going to use are clean and dry.

   If you are adding Thread Sealant to a Fitting or connector that has already been used with a different sealant, use a wire brush to thoroughly remove the old sealant before adding more.

2. Skipping the top thread, apply a small amount of Thread Sealant to the first four threads of the Fitting.

   ⚠ **WARNING** Make sure to wear the proper protective equipment when handling Thread Sealant.

   You only need a small amount because the sealant spreads to the other threads as it is tightened into place. If you put too much, the excess liquid will be pushed out when the Fitting is tightened; use a rag to wipe the excess.

3. Tighten the Fitting into the connector by making 2-3 full turns.
4. Allow the manufacturer-recommended **24 hours** of curing time before pressurizing the system.

Liquid Thread Sealant or Thread Seal Tape?

We have found that much QuickJack criticism or warranty-related incidences were caused by Hydraulic Fluid contamination, with evidence of Thread Seal Tape particles inside the Power Unit components and the Reservoir.

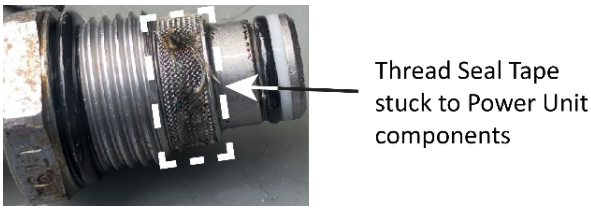

In an attempt to prevent this contamination, we have begun using a Liquid Thread Sealant in lieu of Thread Seal Tape. If you want to use Thread Seal Tape over Liquid Thread Sealant, by all means, use what you are most familiar with. However, you ***must*** carefully read and use the following instructions.

Important Notes:

- Thread Seal Tape ***must*** wrap **Clockwise** around the threads for it to work properly. Some customers incorrectly wrap it backward, resulting in the Tape *unwinding* as the Fitting is being tightened.
- Use only 2-3 turns of Thread Seal Tape. ***Never allow Thread Seal Tape to overlap the end of the NPT Fitting threads***, the overlapping Tape will separate during tightening and enter the Hydraulic System and contaminate the Power Unit components and the Reservoir, resulting in equipment malfunction.

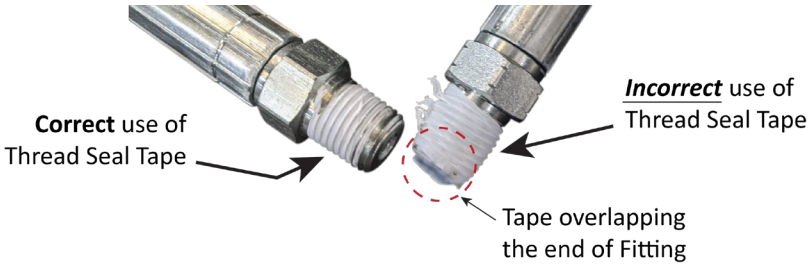

- As a general rule, Fittings with tapered threads should ***not*** be assembled to a specific torque, as the amount of torque varies with thread quality, Port and Fitting materials, sealant used, and other factors.
- When installing the QuickJack Hose Fittings, hand-tighten the Fittings together, then 2-3 turns after using a Wrench. Once done, ***make sure to check all Hydraulic Hoses and Fitting connections*** **before** ***raising a Vehicle***.

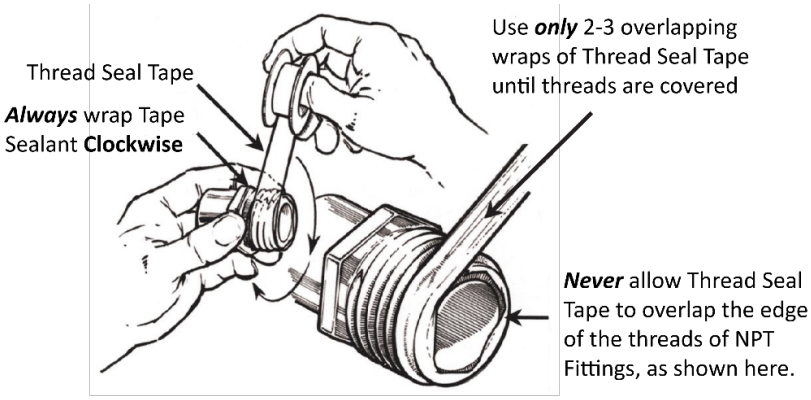

Preparing the Short Hydraulic Hoses

To prepare the Short Hydraulic Hoses, you will need from Box 3:

- **Two Short Hydraulic Hoses** (5570233).
- **Two Male Quick-Connect Fittings** (5550032).

The following graphic shows the connections to make to the Short Hydraulic Hoses.

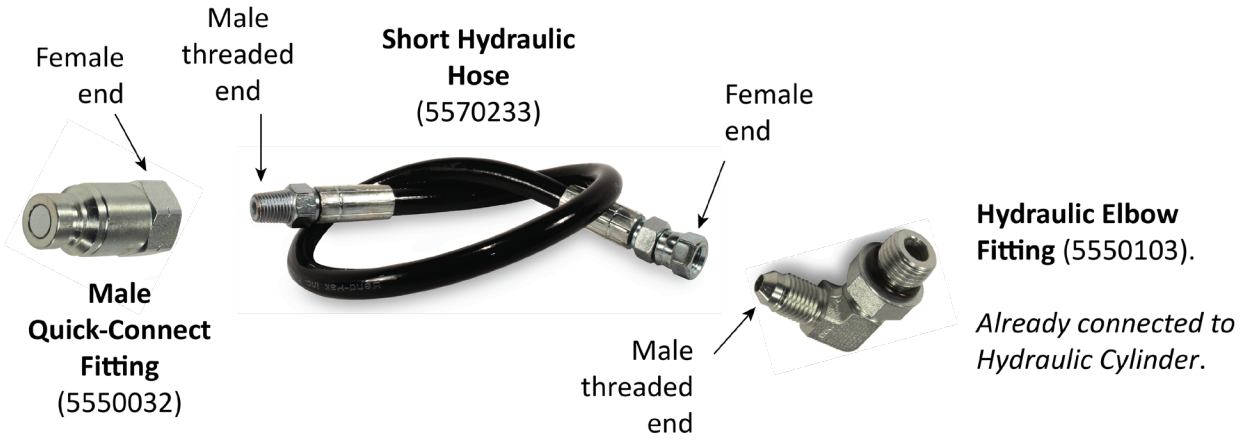

To set up and connect the Short Hydraulic Hoses:

1. Locate both Short Hydraulic Hoses and remove their protective caps.
2. Prepare the threaded fitting on the male end of each Short Hydraulic Hose with Thread Sealant.
3. Attach a Male Quick-Connect Fitting to the male threaded end of the Short Hydraulic Hose; make 2-3 full turns using a wrench to securely tighten in place.
4. Connect the other end of the Short Hydraulic Hose to the male connector on the Hydraulic Elbow Fitting on the Hydraulic Cylinder; make 2-3 full turns using a wrench to securely tighten in place.
5. Route both Short Hydraulic Hoses ***under*** the Frame ends; ***keep them clear of pinch points!***

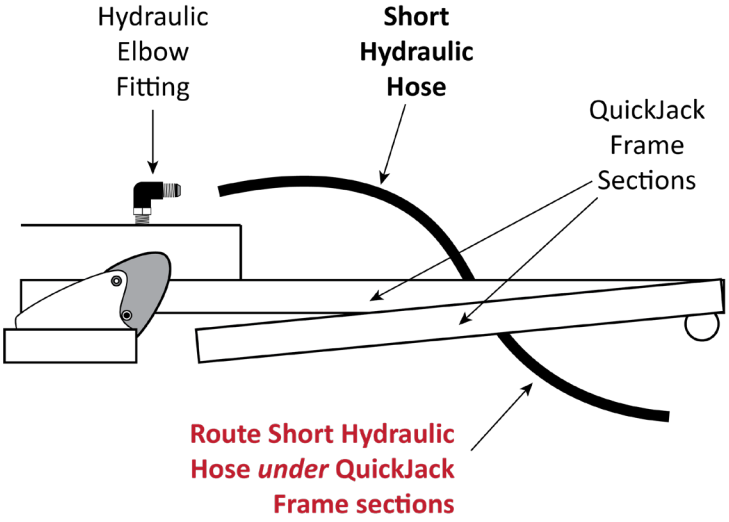

⚠ **CAUTION** If you mistakenly route a Short Hydraulic Hose *over* the QuickJack Frame, the QuickJack will not work correctly and you could damage the hose and/or cause the Vehicle on the QuickJack to become unstable.

About Quick-Connect Fittings

Quick-Connect Fittings let you quickly connect and disconnect the QuickJack's Hydraulic Hoses.

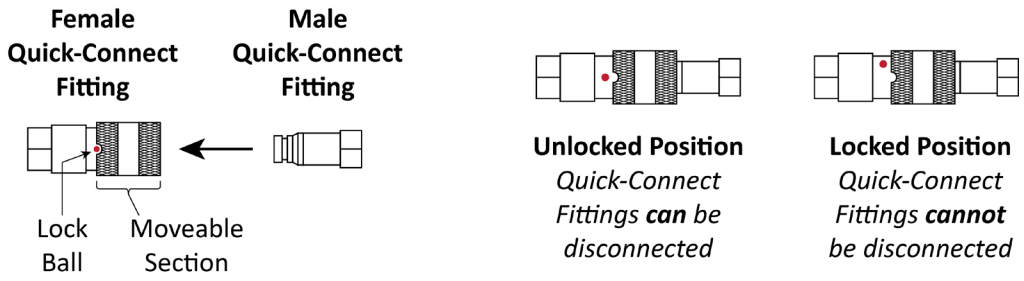

To lock a connection: Push the Male Quick-Connect Fitting into the Female Quick-Connect Fitting, then turn the Moveable Section so that the Lock Ball is not opposite the Notch.

To *unlock* and disconnect a connection: Turn the Moveable Section so the Lock Ball is opposite the Notch, then pull back on the Moveable Section and pull out the Male Quick-Connect Fitting.

Preparing and Connecting the Long Hydraulic Hoses

To connect the Long Hydraulic Hoses, you will need from Box 3:

- **Two Long Hydraulic Hoses** (5570216).
- **Four Female Quick-Connect Fittings** (5550031).

The following graphic shows the connections to make to the Long Hydraulic Hoses.

To prepare and connect the Long Hydraulic Hoses:

1. Locate both Long Hydraulic Hoses and remove their protective caps.
2. Prepare the Threaded ends with the supplied Thread Sealant.
3. Connect the Female Quick-Connect Fittings to the male threaded connectors on both ends of both Long Hydraulic Hoses.

   To tighten, use one wrench to hold the Male connector in place and a second wrench on the Female Quick-Connect Fitting to tighten it; make 2-3 full turns using a wrench to securely tighten in place.
4. Connect one end of the Long Hydraulic Hose to the Short Hydraulic Hose; the other end of the Long Hydraulic Hose connects to the Power Unit; do the same for the other Long Hydraulic Hose and Short Hydraulic Hose.

Pressurizing the Air Cylinders

The Air Cylinders (one on each QuickJack Frame) need to be pressurized before you can use your QuickJack. Air Cylinders help push the QuickJack Frames down.

Note: The Valve Stems on the Air Cylinders are installed at the factory.

⚠ **CAUTION** Make sure the QuickJack Frames are ***fully lowered*** when you pressurize the Air Cylinders.

To pressurize the Air Cylinders:

1. Use a valve tool to release a short hiss of air to check the air inflation valve for proper operation and to drain any accumulated oil.

   Holding the valve open releases the air currently in the Air Cylinder.

2. Using a pump or air compressor, inflate the Air Cylinder to from 40 to 50 PSI / 2.75 to 3.4 BAR; ***do not exceed 50 PSI / 3.4 BAR***.

   The **JackPak accessory** can also be used to pressurize the Air Cylinders.

3. When the pressure is between 40 and 50 PSI / 2.75 to 3.4 BAR, remove the pump or air compressor.

⚠ **WARNING** Do not exceed 50 PSI / 3.4 BAR with the QuickJack Frames in the fully lowered position, as there is a chance of explosion. Make sure to remove power and bleed off air pressure before servicing.

4. Repeat Steps 1 through 3 for the other Air Cylinder.

Find a Location for the Power Unit

Your Power Unit must be located near the QuickJack Frames.

Note: Some Power Units come with a carrier and handle, some with just a handle. They work the same.

Based on the combined length of the Short and Long Hydraulic Hoses, your Power Unit should be about 10 to 12 feet away from your QuickJack Frames and out of the way of the Vehicles you will be driving on to and off of the QuickJack.

⚠ **CAUTION** Do not drive vehicles ***on*** the Hydraulic Hoses; this damages the hoses, making it more likely that they will leak.

⚠ **WARNING** ***Risk of explosion***. The QuickJack Power Unit has arcing or sparking parts that should not be exposed to flammable vapors. The Power Unit should be located at least 460 mm (18 inches) above the floor.

Installing the Hydraulic Fittings on the Power Unit

Before you can connect your Power Unit to the Long Hydraulic Hose, you first need to install Quick-Connect Fittings to the hydraulic ports on the front of the Power Unit.

Tip QuickJack recommends installing the bottom Power Unit Quick-Connect Fitting first, then the top one. It is difficult to access the bottom fitting if you install the top fitting first.

You usually only have to install these fittings once. To move your QuickJack later, just disconnect the Power Unit from the Long Hydraulic Hoses using the Quick-Connect Fittings.

To connect Power Unit Quick-Connect Fittings to Power Unit hydraulic ports:

1. On the Power Unit, remove the plastic shipping plugs from the two hydraulic ports on the front.
2. Get a Power Unit Quick-Connect Fitting from the QuickJack Parts Bag, insert the O-ring side into one of the two hydraulic ports on the front of the Power Unit; do the same for the second Quick-Connect Fitting on the Power Unit.

NOTICE **The ORB end can be hand-tightened in place**. Use a wrench for an additional half of a turn to ensure snugness, if needed.

Do not use Liquid Thread Sealant on the O-ring threads.

Power Unit Quick-Connect Fitting
(5550413)

O-Ring end.
Do not tape;
connects to
Power Unit port.

Male Quick-Connect Fitting.
Connects to female
Quick-Connect Fitting on
Long Hydraulic Hose.

Connect the Power Unit to a Power Source

Your Power Unit must also be located near an appropriate power source.

Refer to the manufacturer's information tag on your Power Unit for current and wattage information for your specific unit.

Power Sources for VAC Power Units

If you are using a 110 or 220/240 VAC Power Unit with your QuickJack, connect it to an appropriate power source.

110 VAC Power Unit

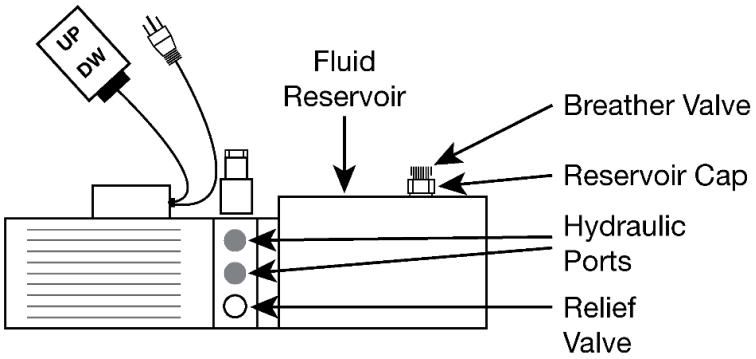

Drawing not necessarily to scale. Some Power Units may be slightly different.

220/240 VAC Power Unit

220 and 240 Power Units come with wiring for connection to a power source, but ***without a plug***. You will need to have a certified Electrician connect the wiring to a plug appropriate for your location.

⚠ **DANGER** All wiring ***must*** be performed by a licensed, certified Electrician in accordance with local and national electrical codes. If wiring the plug is done incorrectly, you could damage the QuickJack and/or cause serious injury.

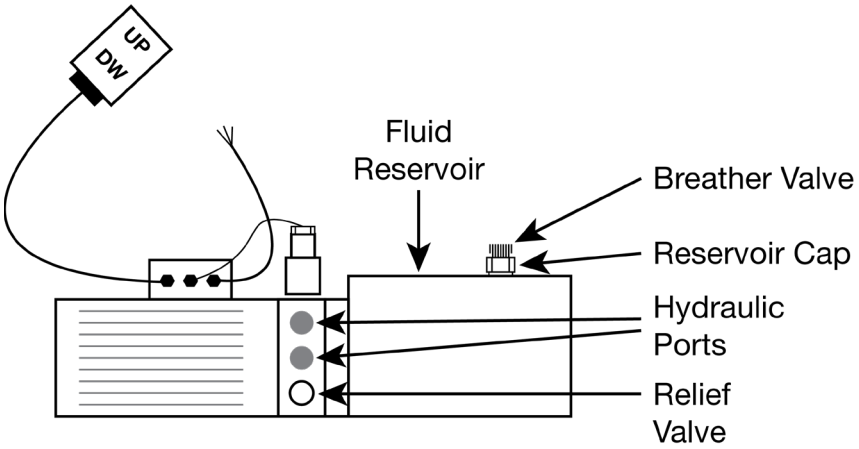

Drawing not necessarily to scale. Some Power Units may be slightly different.

The wiring on the 220/240 VAC units uses the international wiring standard of Brown (hot), Blue (neutral), and Green/Yellow (ground). In the United States, the corresponding wiring is Black (L1 hot), Red (L2 hot), and Green or Green/Yellow (ground).

The following drawing shows the 220 VAC Power Unit for QuickJack (CE-approved).

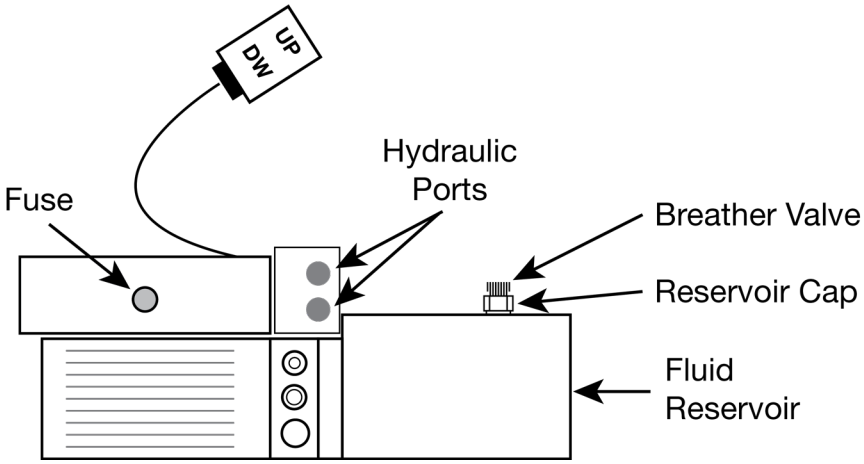

Drawing not necessarily to scale. Some Power Units may be slightly different.

Power Sources for 12 VDC Power Units

If you are using a 12 VDC Power Unit with your QuickJack, you can connect it to a Vehicle battery.

Refer to **Using the 12 VDC Power Unit** for usage information.

12 VDC Power Unit

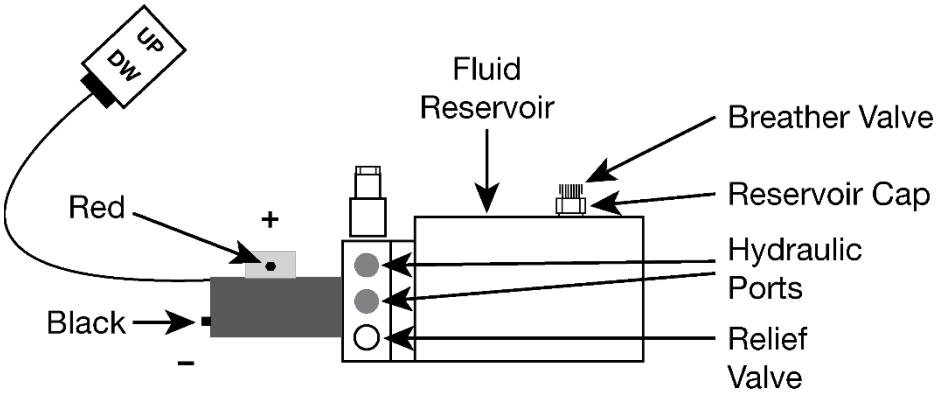

Drawing not necessarily to scale. Some Power Units may be slightly different.

Keep the following in mind:

- Connect your 12 VDC Power Unit directly to a 12-volt power source. The minimum requirement for Jumper Cables is 7 gauge / 10 mm.
- Make sure to connect the 12 VDC ***negative*** (black, **–**) source to the ***negative*** (black, **–**) terminal and the 12 VDC **positive** (red, **+**) power source to the **positive** (red, **+**) terminal.
- Remove all jewelry while working with the 12 VDC Power Unit.

⚠ **WARNING** Make sure to connect **Positive to Positive** and **Negative to Negative**. If you connect Positive to Negative, you will almost certainly cause damage to the electrical system of the Vehicle, including the battery. You could also damage the 12 VDC QuickJack Power Unit, cause an electrical fire, or cause an explosion.

Filling the Hydraulic Fluid Reservoir on the Power Unit

The Hydraulic Fluid Reservoir must be filled with Hydraulic Fluid or Automatic Transmission Fluid ***before*** you begin operation of the QuickJack.

When you receive it, the Fluid Reservoir is empty. The Power Unit will not work correctly until it is filled with approved fluids.

The fluid level should be approximately .5 inch (12 mm) below the Fill Hole when the QuickJack is fully lowered.

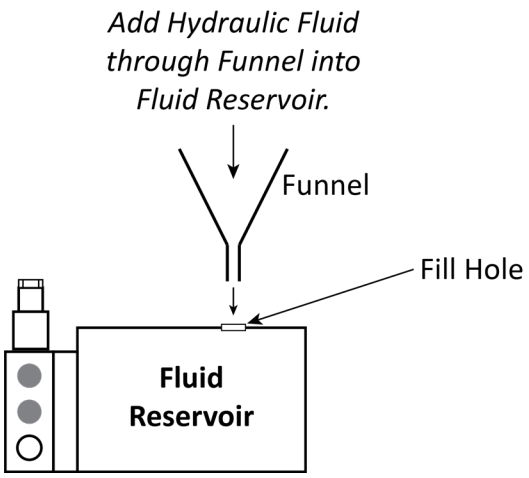

⚠ **CAUTION** If you use the QuickJack ***without*** fluid in the reservoir, you could damage the Power Unit.

⚠ **WARNING** Hydraulic Fluid under pressure is dangerous. You must wear OSHA-approved (publication 3151) Personal Protective Equipment ***at all times*** when handling hydraulic components: eye protection and leather gloves are mandatory.

Approved fluids are any general purpose ISO-32, ISO-46, or ISO-68 Hydraulic Fluid, approved Automatic Transmission Fluids such as Dexron III, Dexron VI, Mercon V, Mercon LV, or any synthetic multi-vehicle Automatic Transmission Fluid.

Note: The fluid level drops some after you start using the QuickJack; this is because some fluid stays in the Hydraulic Hoses. If you notice that the fluid level has dropped more than a little, you should fill it back up to half an inch below the Fill Hole (with the Frames on the ground).

Important: Do not completely fill the Fluid Reservoir while there is fluid in the hoses. If you do, the Reservoir could overflow when the fluid in the hoses returns (when you lower the QuickJack Frames).

QuickJack recommends having a couple of rags nearby in case any fluid leaks.

Check the Breather Valve

If your Power Unit has a Reservoir Cap with a Breather Valve, you need to loosen the Breather Valve *before* using the Power Unit. It ships tightened, so that no contaminants will get inside.

If your Power Unit has a Self-Venting Reservoir Cap (see drawing below), you do ***not*** need to loosen it.

To check the Breather Valve:

1. Determine what Breather Valve is on your Power Unit:
   - **Reservoir Cap, with Breather Valve**. The Breather Valve comes from the factory tightened. You must loosen it before you start using the Power Unit.

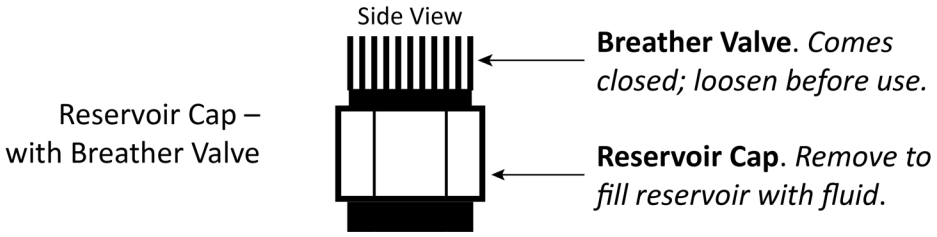

   - **Reservoir Cap, Self-Venting**. There's nothing to loosen; proceed to the next section.

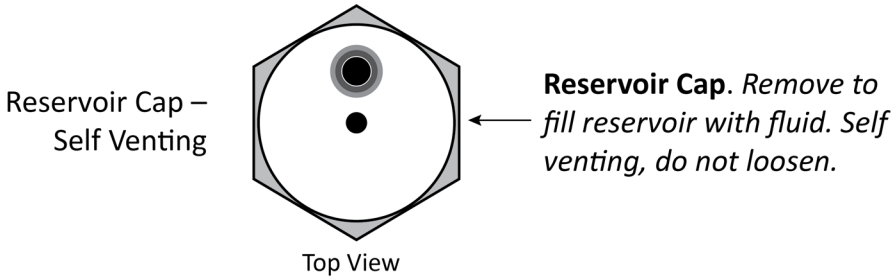

⚠ **CAUTION** If you have a Reservoir Cap with a Breather Valve, you ***must*** loosen it about half a turn counterclockwise before using the Power Unit. If you do not, the excess pressure could damage the pump or cause the Fluid Reservoir to overflow.

2. To loosen a Breather Valve, turn it from one quarter to one half turn ***counterclockwise***.

   This moves it to the open position, allowing air to move into and out of the Fluid Reservoir.

3. If you are going to move the Power Unit to a different location, tighten the Breather Valve before you move it. This helps prevent fluid from leaking and contaminants from getting into the Fluid Reservoir during transport.

   Make sure to loosen the Breather Valve again ***before*** using the Power Unit at the new location.

Connect the Hydraulic Hoses

If you have not done so already, connect all of the Hydraulic Hoses:

- **Short Hydraulic Hoses**. Connect to the Hydraulic Cylinders on the QuickJack Frames on one end and to the Long Hydraulic Hoses on the other end.
- **Long Hydraulic Hoses**. Connect to the Short Hydraulic Hoses on one end and to the Quick-Connect Fittings on the front of the Power Unit on the other end.

The drawing in **Unpacking** shows the locations of the Hydraulic Hoses in relation to the QuickJack Frames and the Power Unit.

Bleeding the Hydraulic Cylinders

Bleeding the Hydraulic Cylinders removes air from the Hydraulic System.

If you have air in the Hydraulic System, you can experience shaking, jerking, one frame rising faster than the other, and so on during raising and lowering. This does not damage the QuickJack or the Hydraulic Cylinder, but it is not the normal *smooth* experience you should be getting.

To bleed the Hydraulic Cylinders, you are going to need:

- multiple ***rags*** to wipe up fluid
- a ***3/16"*** ***hex key*** (also called an Allen® key) to loosen and tighten the Bleeder Screws
- ***six of the Lift Blocks*** that came with the QuickJack: four Tall and two Medium

Do ***not*** put a Vehicle on the QuickJack Frames when bleeding the Hydraulic Cylinders.

Important In general, you should ***never*** raise your QuickJack Frames without weight. However, for bleeding the Hydraulic Cylinders, we recommend ***not*** adding weight to the QuickJack Frames. ***Do not raise beyond the First Locking Position without weight!***

To bleed a QuickJack's Hydraulic Cylinders:

1. Lay the two QuickJack Frames next to each other on the ground.

⚠ **CAUTION** Keep hands clear of pinch points at all times; you could be injured.

2. Stack two of the Tall Lift Blocks on each other, and then put one of the Medium Lift Blocks on top of them. Do this twice, so you have 2 sets of three stacked Lift Blocks.
3. Raise the Wheels end of the QuickJack Frames, one Frame at a time, and put one set of stacked Lift Blocks under the Flat Plate that is under the Bleeder Screw.

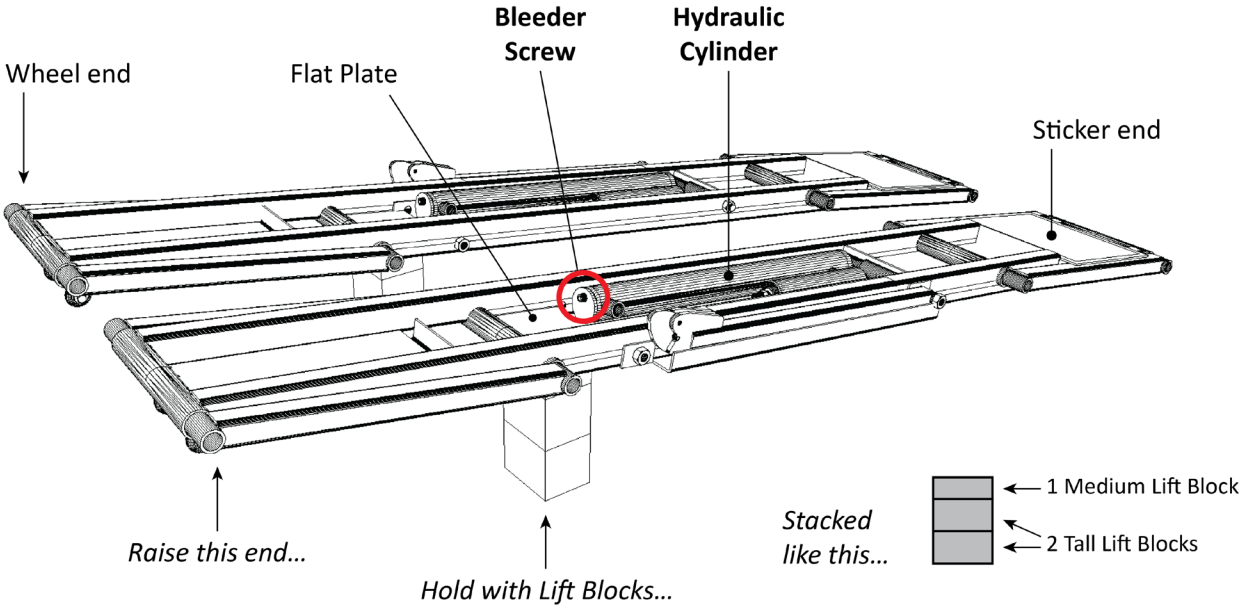

⚠ **CAUTION** Do ***not*** put the stacked Lift Blocks under the Wheel end of the Frame. The Wheel end of the Frame moves when the QuickJack is being raised or lowered, which could lead to the stacked Lift Blocks falling over.

4. Gently rock each QuickJack Frame to make sure it is stable on the stacked Lift Blocks.

5. If a Frame is ***not*** stable, adjust the Lift Blocks and/or the QuickJack Frame until it is stable.

   Do not proceed until both QuickJack Frames are stable on the stacked Lift Blocks.

6. Using the Pendant Control, raise and then lower both Frames about 8 in / 203 mm or so off the ground (do not pass the First Locking Position) ***three times***.

   Note: Without the weight of a Vehicle on them, the QuickJack Frames may lower unevenly and slower than normal. If they do not come down at all, put some weight on them.

   Raising and lowering the Frames moves Hydraulic Fluid into the Hydraulic System and pushes air towards the Bleeder Screws.

7. Put a clean rag under the Bleeder Screw on the Hydraulic Cylinder you are going to bleed first.

   There is definitely going to be Hydraulic Fluid coming out, so it is better to be ready for it.

8. Loosen the Bleeder Screw using the hex key.
9. When you hear air escaping, stop loosening the Bleeder Screw—air and some Hydraulic Fluid come out.

⚠ **WARNING** You must wear OSHA-approved (publication 3151) Personal Protective Equipment ***at all times*** when handling hydraulic components: eye protection and leather gloves are mandatory.

10. When no more ***air*** is coming out, tighten the Bleeder Screw and wipe up the Hydraulic Fluid.
11. Put another rag under the Bleeder Screw.
12. Press **Up** on the Pendant Control for a couple of seconds, then stop.

    This helps to move any remaining air towards the Bleeder Screw.

13. Open the Bleeder Screw a small amount.
14. Press **Up** on the Pendant Control for a couple of seconds *only*, then stop.

    A combination of air and Hydraulic Fluid comes out.

15. Tighten the Bleeder Screw.

    The Bleeder Screw must be tightened before you press **Down** on the Pendant Control. If it is not tightened, air will be pulled ***in*** as the QuickJack Frames lower.

16. Press **Down** on the Pendant Control; return the QuickJack Frames to flat.

Note: Without the weight of a Vehicle on them, the QuickJack Frames may lower unevenly and slower than normal.

17. Repeat Steps 13 through 16 until no more air comes out.
18. Clean up any remaining Hydraulic Fluid.
19. Tighten the Bleeder Screw with the hex key: ***do not overtighten.***
20. Lift one of the QuickJack Frames, remove the stacked Lift Blocks, lower the frame back down to the ground, and then repeat for the other QuickJack Frame.

Final Checklist Before Operation

Make sure these things have been done ***before*** using your QuickJack:

- Review the **Setup Checklist** to make sure all steps have been performed.
- Make sure the Power Unit is getting power from the power source.
- Check the Hydraulic Fluid Reservoir; it must be full of approved Hydraulic Fluid or automatic transmission fluid. ***You can harm the motor by running it without enough fluid.***
- Check the Hydraulic System for leaks. Verify all Hydraulic Hose connections, Hydraulic Fittings, and Auxiliary Port Plugs on the Frames and Power Unit are secure.
- Make sure both Lock Bars are moving freely and in their tracks; make sure there are no obstructions in the tracks.

Test the QuickJack

Make a visual check of all components to make sure they are in good working order ***prior*** to raising a Vehicle; do this ***every time*** you use your QuickJack. Check the Quick-Connect Fittings for wear, damage, or leakage; do not raise a Vehicle if the Quick-Connect Fittings are damaged or worn—you must replace them.

Important: ***Only raise the QuickJack Frames with a Vehicle on them***. The QuickJack Frames are engineered and designed to support the weight of a Vehicle; they can occasionally get stuck at full height if there is no Vehicle on them.

⚠ **WARNING** ***When raising or lowering a QuickJack, pay attention!*** A common safety issue is lack of Operator attention; for example, **do not** be looking at a smartphone while raising or lowering the QuickJack. It is your responsibility to pay attention; if you do not, you could damage the QuickJack or the Vehicle on it and/or injure people near it.

Refer to **Raising the QuickJack Frames** for detailed information about raising the QuickJack Frames and engaging the QuickJack on a locking position.

To test your QuickJack:

1. Place the QuickJack Frames in the desired location with ***both Lock Bars on the outside***.
2. Check both Lock Bars and all of the Hydraulic Hoses.

   The Lock Bars must be able to move freely along the bottom of their Channels; they must not stay up in the air when you raise the Frames (if they do, the most likely problem is that the Lock Bar Bolt is over-tightened). The Hydraulic Hoses must all be connected.
3. Make sure the Power Unit has been set up correctly and is connected to a power source.

   The fluid level should be approximately .5 inch (12 mm) below the fill hole.

   Important: If you do not put enough Hydraulic Fluid in the reservoir, the QuickJack may start to rise but will slow and then stop when the reservoir is out of fluid. To fix this, lower the QuickJack Frames back down to the ground and then add additional fluid to the reservoir. Fill it to approximately .5 inch (12 mm) below the Fill Hole.
4. Check the pressure in the Air Cylinders; they should register from 40 to 50 PSI (2.75 to 3.4 BAR).

   Do ***not*** exceed 50 PSI / 3.4 BAR.
5. Put a Vehicle into place. ***Do not raise your QuickJack without the weight of a Vehicle***.

6. Position the Lift Blocks in the Receiver Trays for the Vehicle you are going to raise. Be sure to use the factory-recommended Lifting Points for the Vehicle.
7. Press **Up** on the Pendant Control for a couple of seconds.

   After a few seconds, the QuickJack Frames will start moving up. As this is the first use, it takes a couple of seconds for the Hydraulic Hoses to fill with fluid.

   If the QuickJack Frames do not move, make sure the Power Unit is connected to an appropriate power source, make sure the Hydraulic Hoses are connected to the Power Unit, and make sure there is sufficient Hydraulic Fluid in the reservoir. If you find any of these issues, fix them and then try again. If the Frames still do not move, refer to **Troubleshooting**.
8. Just ***before*** the Frames make contact with the Lifting Points on the Vehicle, release **Up**.

   The Frames stop moving.

   Check the locations where the Lift Blocks will hit the Lifting Points. If necessary, adjust the Lift Blocks so they are properly positioned (you may need to lower the Vehicle to adjust them).

   Press **Up** to raise the Frames to just past the First Locking Position, then press **Down** for a second or two. The Lock Bar will lock at the First Locking Position and the Frames will stop moving.

⚠ **WARNING** If one Frame goes up faster than the other with the weight of a Vehicle on it, this is a safety hazard. Release **Up** immediately and then press **Down** to lower the Vehicle back down to the ground. Wait a minute and then try again. If the issue continues, refer to **Troubleshooting**.

9. With the QuickJack engaged on the First Locking Position, check all Hydraulic Hose connections for leaks. If you find any, tighten the leaking connection and wipe up the fluid.

   If the motor gets hot or sounds irregular, check the Power Unit and all electrical connections.
10. Carefully rock the Vehicle to test its stability.

    If the Vehicle seems stable, the QuickJack is ready for normal operation.

    If the Vehicle does ***not*** seem stable, lower it back to the ground and check the positioning of the Lift Blocks in the Receiver Trays.
11. If everything appears to be working normally, lower the QuickJack Frames back down to the ground. To do this: press **Up** for a second or two so that the Lock Bars go past the Lock Blocks, then press **Down** until the Lock Bars lower past the Lock Blocks.

    When the Frames get to the ground, hold **Down** for another ~5 seconds so that the Hydraulic Fluid returns to the reservoir.

    If there are issues you cannot resolve, stop using the QuickJack, then refer to **Troubleshooting**, or call QuickJack at **(888) 262-3880** or **(805) 933-9970**.

Leave the Manual with the Owner/Operator

Make sure to leave the *Setup and Operation Manual* with the owner/operator so that it is available to everyone who is going to use the QuickJack.

Operation

This section describes how to operate your QuickJack. This manual must delivered to the owner/user/employer and be kept near the QuickJack.

QuickJack recommends using *Vehicle Lifting Points for Frame-Engaging Lifts* for proper positioning of Vehicles on your QuickJack. It shows the factory-recommended Lifting Points for a wide variety of Vehicles. It is available on the **ALI website**.

QuickJack also recommends SAE Standard J2184, *Vehicle Lift Points for Service Garage Lifting*, as a resource to assist you in the proper positioning of a Vehicle for raising.

⚠ **WARNING** Make sure to properly position each Vehicle on its Lifting Points. Improper positioning of a Vehicle could lead to it being unstable and potentially falling off the QuickJack. This could damage the Vehicle, damage the QuickJack, and potentially injure anyone nearby.

Safety

Before you raise or lower a Vehicle using your QuickJack:

- **Check the QuickJack**. Check the QuickJack Frames for any missing, heavily worn, or damaged parts. Make sure the Lift Blocks are in their Receiver Trays. Do not operate the QuickJack if you find any issues; instead, stop using it, then visit **quickjack.com/support**, email **support@quickjack.com**, or call **(888) 262-3880**.
- **Check the area**. Check the area around the QuickJack for obstructions; anything that might impact the raising or lowering of the Vehicle. Do not forget to check ***above*** the QuickJack. If you find an obstruction, move it out of the way. Do not allow unauthorized people, children, or animals near the QuickJack while it is being used.
- **Check the operators**. Make sure everyone who is going to operate the QuickJack has been trained in its use, has read the labels on the unit, is not under the influence of drugs or alcohol, and has read the manual.

⚠ **WARNING** ***When raising or lowering a QuickJack, the Operator must pay attention!*** A common safety issue is lack of attention; for example, Operators must ***not*** be looking at a smartphone.

- **Check for safety**. Make sure everyone who is going to be walking near the QuickJack is aware of its presence and takes appropriate safety measures. ***When raising a Vehicle, always leave the QuickJack engaged on a locking position***. When lowering the QuickJack, do not leave it until it is on the ground.

⚠ **WARNING** You must ***always*** use auxiliary safety stands under the Vehicle while elevated on both QuickJack Frames.

⚠ **WARNING** ***Risk of explosion***. The QuickJack Power Unit has arcing or sparking parts that should not be exposed to flammable vapors. The Power Unit should be located at least 460 mm (18 inches) above the floor.

- **Check the Vehicle**. Never exceed the QuickJack's weight rating. Do not allow people inside a Vehicle you are raising. Make sure the Vehicle is not overbalanced on either end. You must use the factory-recommended Lifting Points for the Vehicle. Never raise just one side, one corner, or one end of a Vehicle.

About Lift Blocks

When raising a Vehicle with your QuickJack, the Vehicle should not touch the QuickJack Frames. Instead, they should touch the Lift Blocks that are sitting in the QuickJack's Receiver Trays.

There are three types of Lift Blocks available:

- **Medium/Tall**. Four Medium and four Tall Lift Blocks are *included with each QuickJack*. You can stack one Medium on one Tall, but no more than that; make sure they are centered under the Lifting Points.
- **Pinch Weld**. Ideal for raising Vehicles by their pinch welds. *Separate purchase*.
- **SUV and Light Truck Adapter**. Each set includes four round Contact Pads, four Extenders, and four Bases. Perfect for Vehicles with high ground clearance or non-standard Lifting Points. *Separate purchase.*

⚠ **CAUTION** Do not raise a Vehicle on the QuickJack Frames; always use Lift Blocks, Pinch-Weld Blocks, or SUV and Light Truck Adapters in the Receiver Trays. Raising a Vehicle on the Frames could damage the Vehicle and/or damage the QuickJack.

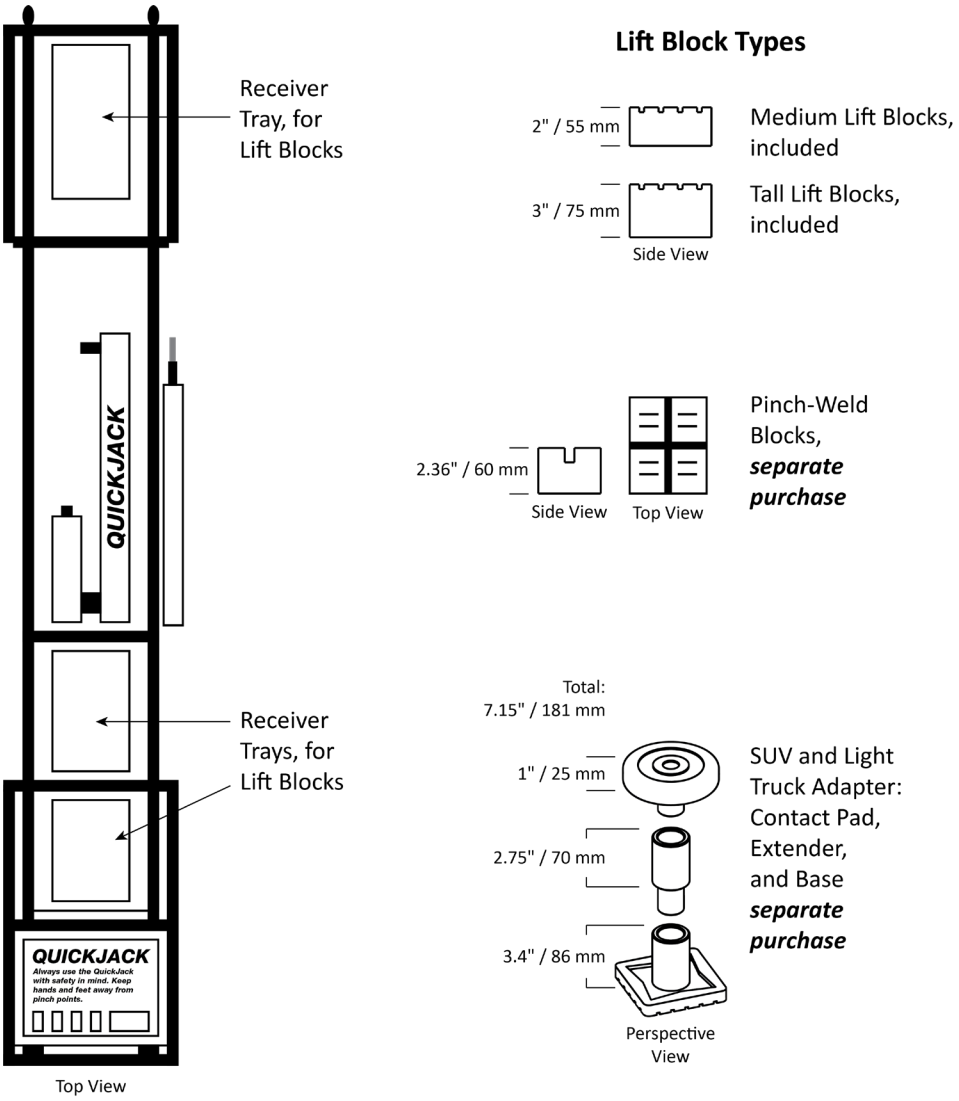

Drawing not necessarily to scale. Not all components shown.

Special QuickJack Warnings

There are two special cases with QuickJack of which you need to be aware:

- **Do not raise QuickJack Frames without a Vehicle on them**. QuickJack Frames are designed and engineered to be used with the weight of a Vehicle on them. You should only raise the QuickJack Frames with the weight of a Vehicle on them, ***even the very first time you use them***. The only exception to this rule is if you are bleeding the Hydraulic Cylinders.

  QuickJack Frames can occasionally get stuck in a raised position if you raise them without the weight of a Vehicle. There is nothing wrong with them if this happens, and the issue can be quickly and easily fixed, it's just that they are designed and engineered to work with the weight of a Vehicle. ***Only raise your QuickJack Frames with a Vehicle on them***.

- **Do not try to raise a load at no net rise**. Your QuickJack requires some space between the ground and your Vehicle to build up enough pressure to raise a load. It cannot raise a full load from a completely flat starting position, as shown below.

  This is not a problem in normal operation, as the Vehicles you want to raise are being held well above the ground by their tires. The problem happens if you lower the QuickJack to a completely flat position when the Vehicle's tires are removed.

⚠ **WARNING** This image shows the QuickJack Frames at a completely flat position holding a Vehicle with no tires. **Do not do this**; the QuickJack will not be able to raise the weight of the Vehicle under these circumstances. If this happens to you, refer to **Troubleshooting**, visit **quickjack.com/support**, or send email to **support@quickjack.com** for instructions.

Positioning the Lift Blocks and Frames

⚠ **WARNING** Always position the two QuickJack Frames as close to parallel as the Lifting Points of the Vehicle allow; load stability can be compromised if they are too far off from parallel.

There are two methods for positioning your QuickJack Frames:

- **Outside in**: Drive the Vehicle to the desired location, position the QuickJack Frames ***outside*** the Vehicle on different sides and between the wheels. If the distance between the wheels is not long enough to accommodate the length of the QuickJack Frames, turn the Frames and push one end under the Vehicle first, then the other end. Quick Frame Handles are typically not required. Make sure ***not*** to drive on the QuickJack's Hydraulic Hoses. Slide each Frame to the desired location under the Vehicle when ready. ***Make sure each Lock Bar is on the outside***.
- **Inside out**: Position the QuickJack Frames next to each other, drive the Vehicle above the Frames, then use your Quick Frame Handles to pull each Frame out to the desired location under the Vehicle based on the factory-recommended Lifting Points. Make sure ***not*** to drive on the QuickJack's Hydraulic Hoses. ***Make sure each Lock Bar is on the outside***.

⚠ **CAUTION** Before positioning QuickJack Frames, make sure they are both fully lowered and that your working area is clear of obstructions. Also, make sure the Vehicle you will be raising is neither rear or front heavy, which throws off its balance.

To position the QuickJack Frames:

1. Determine the desired method for positioning your QuickJack Frames.
2. Position the Lift Blocks, Pinch-Weld Blocks, or SUV and Light Truck Adapters in the Receiver Trays.

Note: You can stack one Medium and one Tall Lift Block together, but not more than that.

⚠ **CAUTION** Do not raise any load on the Frames alone; ***always*** use Lift Blocks, Pinch-Weld Blocks, or the SUV and Light Truck Adapters in the Receiver Trays.

3. Move the QuickJack Frames to the appropriate locations, based on positioning method.
4. If you are using the Inside out method, drive the Vehicle above the Frames.
5. Move the QuickJack Frames to the correct locations under the Vehicle based on the factory-recommended Lifting Points.

⚠ **WARNING** If you do not know the factory-recommended Lifting Points for the Vehicle you are raising, consult *Vehicle Lifting Points for Frame-Engaging Lifts*, and SAE Standard J2184, *Vehicle Lift Points for Service Garage Lifting*, as a resource to assist you in the proper positioning of a Vehicle for raising (these documents are available on the **ALI website**). If the Vehicle has an additional or uniquely positioned payload, have a qualified person calculate the Vehicle center of gravity or have the Vehicle center of gravity determined at a Vehicle scale.

6. Adjust the Lift Blocks in the Receiver Trays so that they are directly underneath the factory-recommended Lifting Points for the Vehicle you are raising.

   The QuickJack Frames and Lift Blocks are now positioned correctly for raising a Vehicle.

Raising the QuickJack Frames

QuickJack Frames have two locking positions. When you raise the QuickJack Frames, always engage both Frames on a Locking Position of the same height or lower them back down to the ground.

⚠ **WARNING** Do not raise a Vehicle unless the QuickJack Frames are properly positioned under the Vehicle, the Frames are as close to parallel as possible, all personnel are a sufficient distance away from the Vehicle, both Lock Bars are on the outside, there is open space on all sides and above the Vehicle, and the operator is paying attention (the operator must maintain visual contact with the Vehicle and the surrounding area while raising or lowering the QuickJack Frames).

To raise a Vehicle:

1. Position the Lift Blocks, Pinch-Weld Blocks, or SUV and Light Truck Adapters in the Receiver Trays.

Note: You can stack one Medium Lift Block on one Tall Lift Block, but ***not more than that***. Do not stack Lift Blocks on Pinch-Weld Blocks or SUV and Light Truck Adapters.

⚠ **CAUTION** Do not raise any load on the Frames alone; ***always*** use Lift Blocks, Pinch-Weld Blocks, or the SUV and Light Truck Adapters in the Receiver Trays.

2. Move the QuickJack Frames to the appropriate locations, based on positioning method.
3. Drive the Vehicle over the Frames if you are using the Inside out method.

   Only raise your QuickJack with a Vehicle on it.

4. Move the QuickJack Frames to the correct locations under the Vehicle based on the factory-recommended Lifting Points.

⚠ **WARNING** If you do not know the factory-recommended Lifting Points for the Vehicle you are raising, consult *Vehicle Lifting Points for Frame-Engaging Lift* and SAE Standard J2184, *Vehicle Lift Points for Service Garage Lifting*, as a resource to assist you in the proper positioning of a Vehicle for raising (these documents are available on the **ALI website**). If the Vehicle has an additional or uniquely positioned payload, have a qualified person calculate the Vehicle center of gravity or have the Vehicle center of gravity determined at a Vehicle scale.

5. Adjust the Lift Blocks in the Receiver Trays so that they are directly underneath the factory-recommended Lifting Points for the Vehicle you are raising.
6. Check both Lock Bars; raise them up and let them drop.

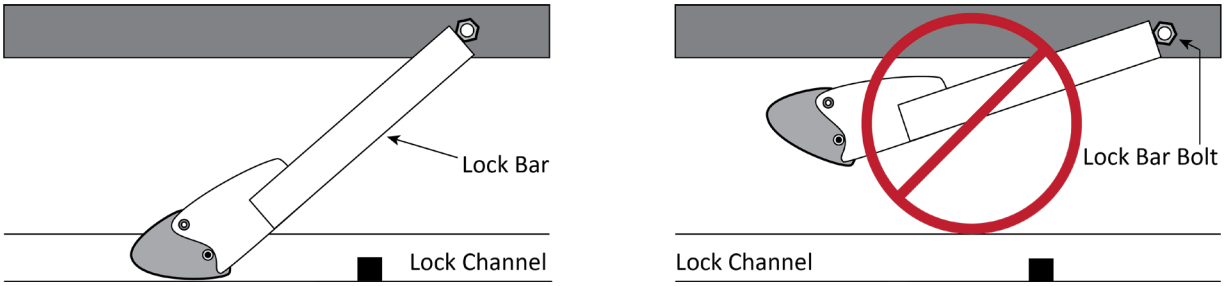

Not necessarily to scale. Not all components shown. Left side shows Lock Bar moving freely in Lock Channel, right side shows Lock Bar stuck up in air, which ***must*** *be corrected.*

If the Lock Bar *Bolt* is too tight, it does not allow the Lock Bar to move freely in the Lock Channel. ***This is a safety issue***; the QuickJack locks cannot be engaged unless each Lock Bar is moving freely in its Lock Channel. If the Lock Bar moves up with the Vehicle as it is raised (as shown above on the right), it cannot lock.

⚠ **WARNING** The Lock Bar ***must*** be moving freely in the Lock Channel. If it is not, the QuickJack cannot be put into a safe, locked position.

To fix an overtight Lock Bar Bolt, loosen the Lock Bar Bolt until the Lock Bar moves freely and stays in the Lock Channel (as shown above, on the left).

7. Walk around the Vehicle and the QuickJack Frames; make sure everything is set up correctly.
8. Press and hold **Up** on the Pendant Control.
9. Just ***before*** the Frames make contact with the Vehicle, release **Up**. The Frames stop moving.
10. Check the locations where the Lift Blocks will hit the factory-recommended Lifting Points on the Vehicle. If necessary, adjust the Lift Blocks so that they are properly positioned (you may need to lower the Vehicle some to adjust the Lift Blocks).
11. Make sure both Lock Bars are moving freely in their respective Lock Channels.
12. After confirming the Lift Blocks and Lock Bars are properly positioned, press **Up**.

    The QuickJack Frames start going up and the Lift Blocks hit the Vehicle's Lifting Points.

⚠ **WARNING** Do not stop raising the Frames until you have passed the First Locking Position.

13. Make sure all Lift Blocks are still in contact with the factory-recommended Lifting Points.

    If the Lift Blocks ***are*** in the right positions, continue with raising the QuickJack Frames.

    If the Lift Blocks are ***not*** in the right positions, press **Down** on the Pendant Control and **carefully** return the Vehicle to the ground, then make the necessary adjustments.
14. To engage the QuickJack on a Locking Position, release **Up** and then press **Down** to lower the Frames until they lock.

    The following drawing shows the Frame securely engaged on a locking position.

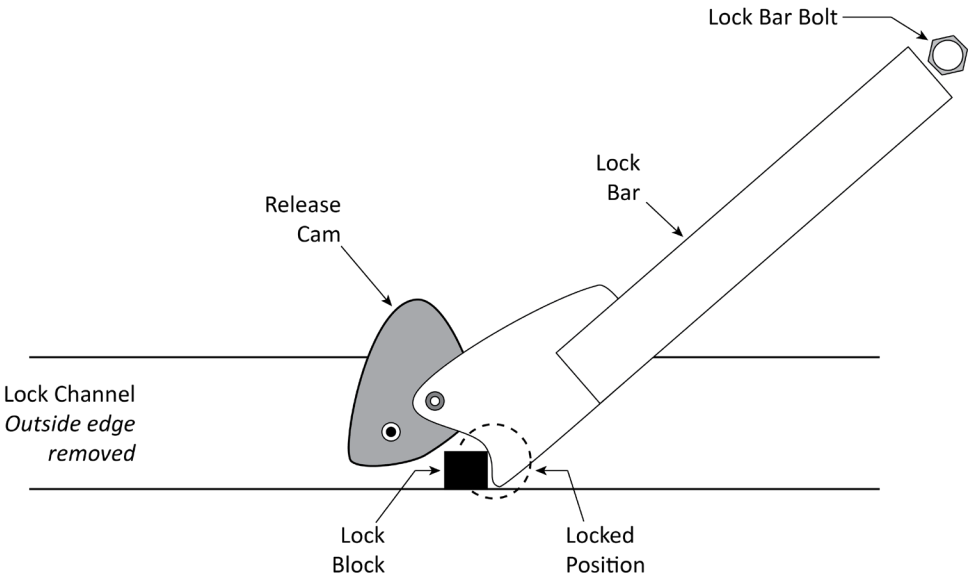

Not to scale. Not all components shown. Shows Release Cam and Lock Bar in Locked Position.

15. Release **Down**.
16. Visually check to make sure both QuickJack Frames are engaged on the same locking position.

    The following graphic shows the Release Cam ***not*** engaged on a locking position; do ***not*** leave your Frames like this!

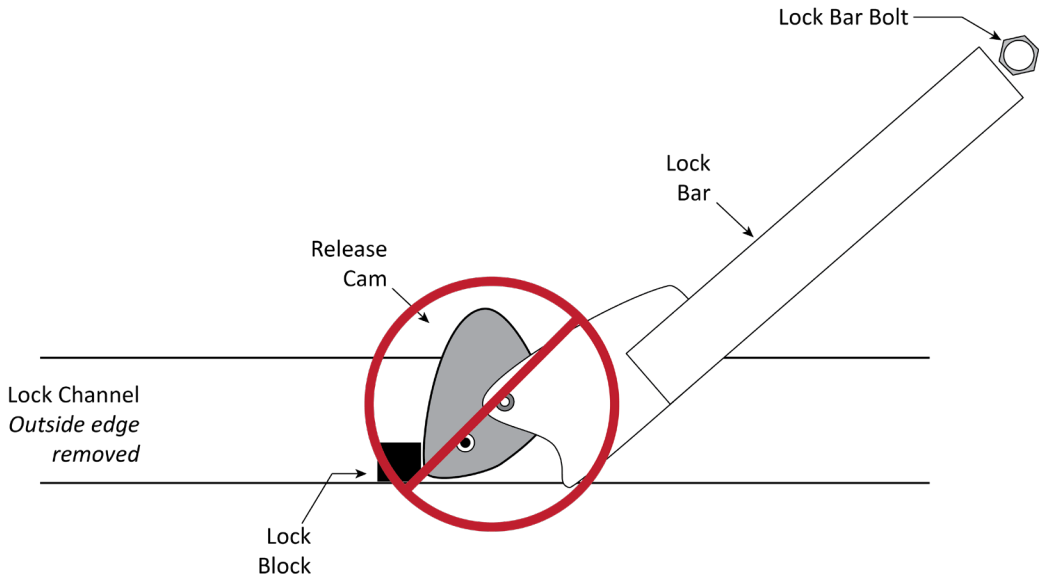

⚠ **WARNING** Before doing anything else (like starting work on the Vehicle or leaving the area), ***visually confirm*** that ***both*** QuickJack Frames are on the same locking positions and that all Lift Blocks are in contact with the factory-recommended Lifting Points of the Vehicle.

You can work on your Vehicle once you have visually confirmed that both Frames are engaged on the same locking position and that all Lift Blocks are in contact with the Vehicle at the factory-recommended Lifting Points.

⚠ **WARNING** As an added safety precaution, you must ***always*** use auxiliary safety stands under the Vehicle while elevated on both QuickJack Frames.

Lowering the Frames from the First Locking Position

Lowering the QuickJack's Frames from the First Locking Position is different from lowering them from the Top Locking Position, so it is described separately.

⚠ **WARNING** When lowering QuickJack Frames, make sure the Lock Bar and the Release Cam stay in their Lock Channel. If they get knocked sideways they can get stuck on the rail of the Lock Channel, which results in the QuickJack not lowering correctly.

To lower QuickJack Frames from the First Locking Position:

1. Press and hold **Up** on the Pendant Control just until the Release Cam clears the Lock Block, then release **Up**.

   The Release Cam / Lock Bar moves away from the Lock Block towards the Top Locking Position.

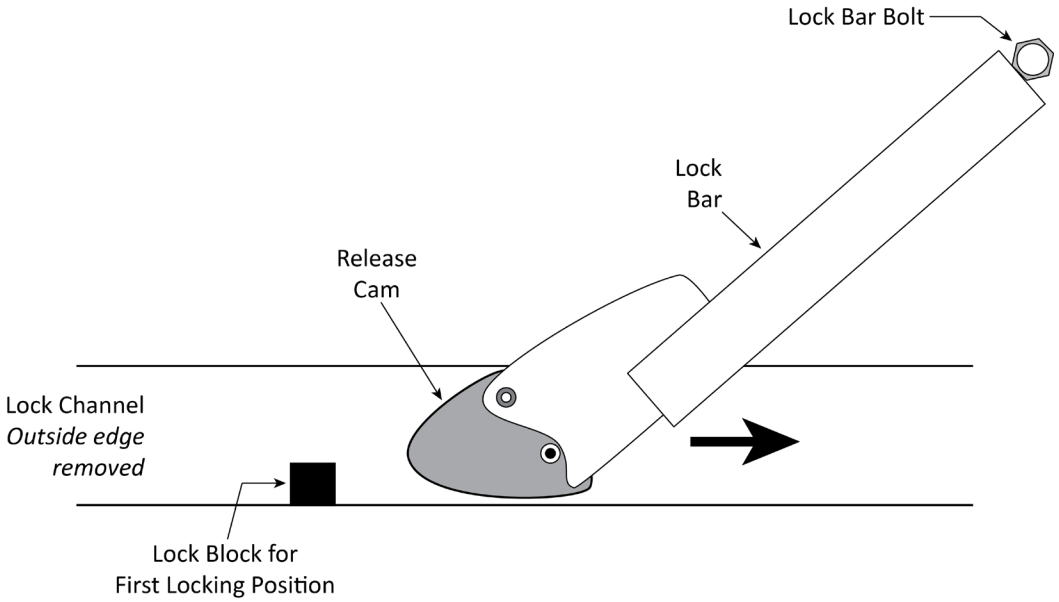

   Not necessarily to scale. Not all components shown. Release Cam and the Lock Bar shown moving off of the First Locking Position towards the Top Locking Position.

2. When the Release Cam and Lock Bar are clear of the Lock Block, press and hold **Down** until both QuickJack Frames lower to the ground.

   The Release Cam moves the Lock Bar over the Lock Block.

   Note: If the Lock Bar locks again on the Lock Block, try again, going up a little bit further this time. What you want is for the Release Cam to be in the Down position, as shown in the drawing above.

Do not lower the Release Cam / Lock Bar if the Release Cam is in the Up position, as shown below. The Release Cam needs to be in the Down position, as shown in the drawing on the previous page.

If the Release Cam is in the Up position, *carefully* use your hand to move it to the Down position.

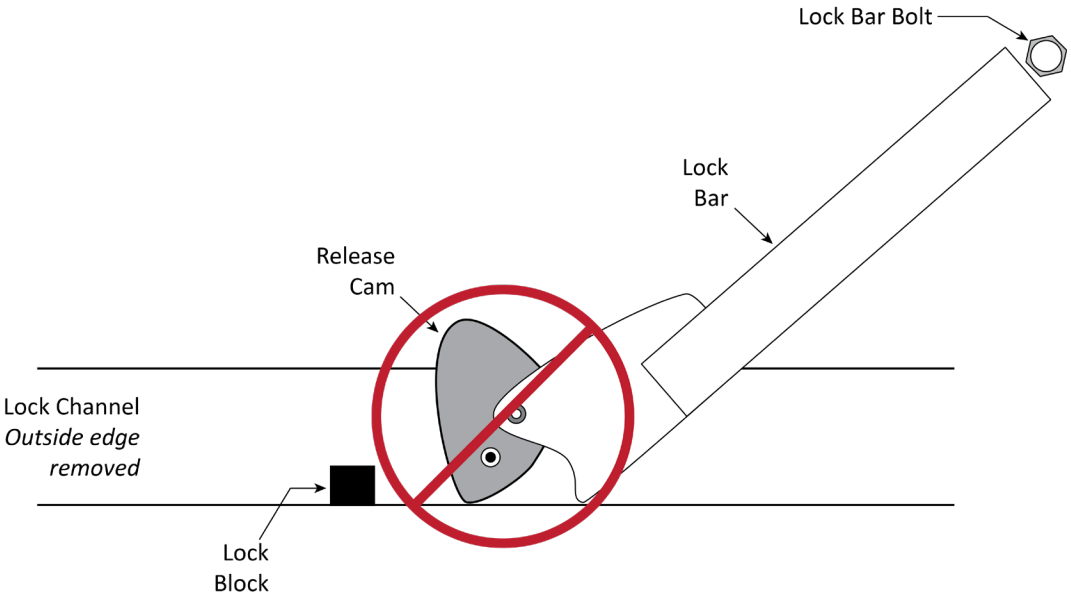

Not necessarily to scale. Not all components shown. Release Cam shown in the Up position, which must be changed to the Down position before lowering.

If one side re-engages on the Lock Block but the other does not, immediately release **Down**, press and hold **Up**, go further past the Lock Block, release **Up**, and then press and hold **Down**. If this issue continues, refer to **Troubleshooting**.

Note: QuickJack recommends pressing **Down** for ~5 seconds ***after*** the Frames are on the ground; this ensures that as much Hydraulic Fluid as possible returns to the Fluid Reservoir.

3. Remove the QuickJack Frames from underneath the Vehicle; you may want to use the Quick Frame Handles.
4. Move the Vehicle, if desired.

⚠ **CAUTION** Do not drive on the QuickJack Frames or the Hydraulic Hoses.

Lowering the Frames from the Top Locking Position

Lowering the QuickJack's Frames from the Top Locking Position is different from lowering them from the First Locking Position, so it is described separately.

⚠ **WARNING** When lowering QuickJack Frames, make sure the Lock Bar and the Release Cam stay in their Lock Channel. If they get knocked sideways they can get stuck on the rail of the Lock Channel, which results in the QuickJack not lowering correctly.

To lower the QuickJack Frames from the Top Locking Position:

1. Press and hold **Up** until the Lock Bar is off the Lock Block, then release **Up**.
2. Raise the Lock Bar ***on both QuickJack Frames*** so that the Release Cam is on top of the Lock Block on both Frames, as shown below.

   You can use your hand or your foot to raise the Lock Bar.

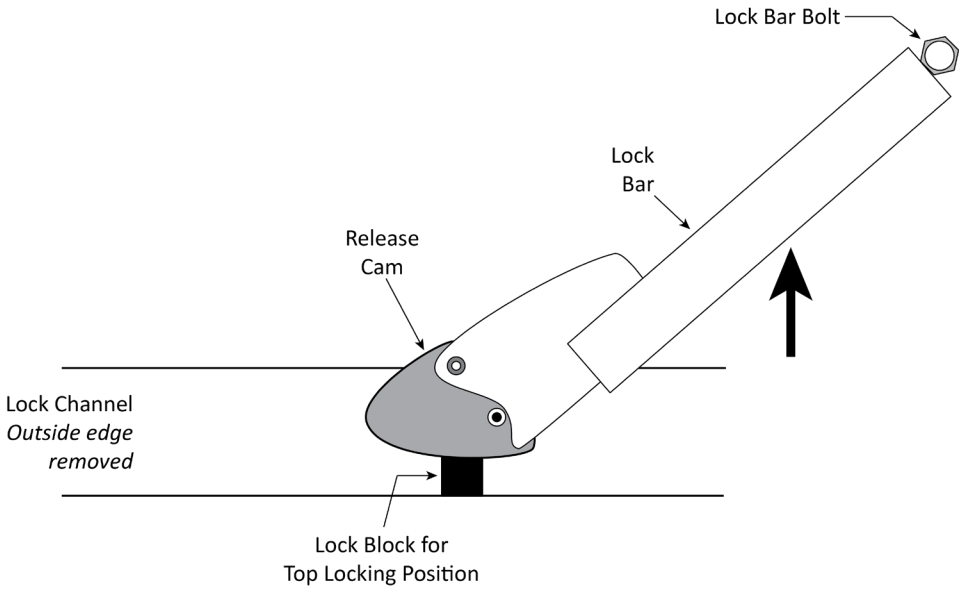

   Not necessarily to scale. Not all components shown. Release Cam shown on top of the Lock Block for the Top Locking Position.

3. When the Release Cam is on top of the Lock Block on both Frames, press and hold **Down** until both QuickJack Frames lower to the ground.

   If the Lock Bars engage on the Lock Block as the Frames go back down, start the process over again.

   If one side re-engages on the Lock Block but the other does not, immediately release **Down** and then start the process again. If this issue continues, refer to **Troubleshooting**.

Note: QuickJack recommends pressing **Down** for ~5 seconds ***after*** the Frames are on the ground; this ensures that as much Hydraulic Fluid as possible returns to the Fluid Reservoir.

4. Remove the QuickJack Frames from underneath the Vehicle; you may want to use the Quick Frame Handles.
5. Move the Vehicle, if desired.

⚠ **CAUTION** Do not drive on the QuickJack Frames or the Hydraulic Hoses.

Using the 12 VDC Power Unit

The 12 VDC Power Unit lets you power your QuickJack using a Vehicle Battery and a pair of Jumper Cables, giving you the flexibility to use your QuickJack in a wide variety of locations.

The following drawing shows how to connect the 12 VDC Power Unit to a Vehicle Battery.

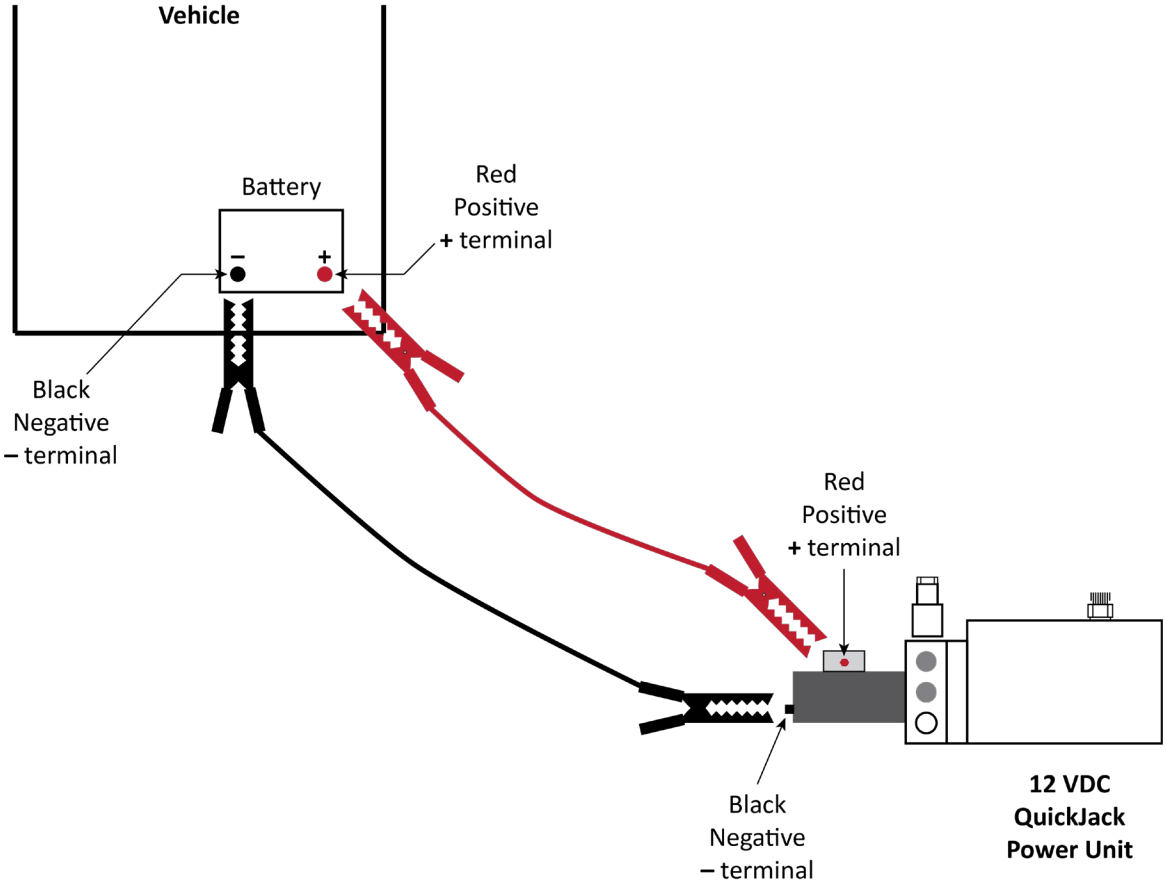

Not to scale. Not all components shown. The Jumper Cables and the Vehicle Battery are not supplied with the 12 VDC QuickJack Power Unit.

Important: If your 12 VDC QuickJack Power Unit has a Reservoir Cap with a Breather Valve, close the Breather Valve before transporting the Power Unit. Then make sure to open the Breather Valve before using the Power Unit.

The following procedure applies only to the 12 VDC QuickJack Power Unit; none of the other QuickJack Power Units can be used with a Vehicle Battery.

⚠ **WARNING** QuickJack recommends wearing safety glasses and removing all jewelry before connecting the 12 VDC QuickJack Power Unit to a Vehicle Battery. If metal touches in the wrong place, it could cause a short circuit that results in an exploded battery, ruined Vehicle computer, burned fingers, and/or battery acid burns.

The following procedure assumes one of the Jumper Cable cables is red, the other black.

To connect the 12 VDC QuickJack Power Unit to a Vehicle Battery:

1. Move the QuickJack Frames to the desired location, find an appropriate location for the 12 VDC QuickJack Power Unit, and then connect the two using the Hydraulic Hoses.
2. Drive the Vehicle whose Battery you want to use to a suitable location near the 12 VDC QuickJack Power Unit.

   The Jumper Cables need to be able to reach from the Vehicle Battery to the 12 VDC QuickJack Power Unit.
3. Attach one end of the ***red*** Jumper Cable to the ***Positive*** terminal on the Vehicle Battery, the other end to the Positive terminal on the 12 VDC QuickJack Power Unit.

   See the drawing on the previous page.

⚠ **WARNING** Make sure to connect **Positive to Positive** and **Negative to Negative**. If you connect Positive to Negative, you will almost certainly cause damage to the electrical system of the Vehicle, including the battery. You could also damage the 12 VDC QuickJack Power Unit, cause an electrical fire, or cause an explosion.

4. Attach one end of the **black** Jumper Cable to the **Negative** terminal on the Vehicle Battery, the other end to the Negative terminal on the 12 VDC QuickJack Power Unit.
5. Turn on the Vehicle's engine.

   BendPak recommends running the Vehicle's engine while you use the QuickJack, so you do not drain the Battery.
6. Use the QuickJack.
7. When you are done using the QuickJack, reverse the process: turn off the Vehicle's engine, remove the Jumper Cables from the Vehicle Battery and the 12 VDC QuickJack Power Unit, and finally pack up the QuickJack Frames.

Additional Operating Information

Keep the following in mind when operating your QuickJack:

- Use it only on a hard, flat surface. Your QuickJack is portable; if you move it to a new location, make sure the new location has a hard, flat surface.
- Check the weight of a Vehicle before attempting to raise it. Do not guess. Never exceed the rated load capacity of your QuickJack.
- Always use Lift Blocks. Do not raise a load on the QuickJack Frames alone.
- Lift Blocks must be used in the Receiver Trays only. The provided Lift Blocks are ***not*** designed for use with pinch-weld frames. If you have a Vehicle with a pinch-weld frame, QuickJack recommends ordering optional Pinch-Weld Blocks, **available on the QuickJack website**.
- If you purchased the SUV and Light Truck Adapter Kit, the square pieces go rubber-down in the Receiver Trays on the QuickJack Frames. You can then put the round stackable adapter in the hole on the top of the square piece either by itself or combined with the extension.
- ***Visually inspect your QuickJack before each use***. Do not use it if you find any damage or severe wear.
- Do not rock Vehicle while raised or remove heavy items that could cause excessive weight shift.
- The QuickJack uses a parallelogram lifting system. As the Frames rise, both the mechanical forces of the jack and pressure of the hydraulic system are reduced significantly as the parallel arms elevate through the rise motion.
- When the parallel lifting arms are elevated (the angles increase), hydraulic system pressure is reduced and mechanical load on the structure is minimized.
- Raising the QuickJack to the Top Locking Position and engaging it there is the most secure method of support.
- Stopping the QuickJack prior to reaching the First Locking Position makes it difficult for the hydraulic system to maintain equal pressure and properly support the load.
- Do not stop raising the QuickJack Frames until you have passed the First Locking Position.
- Never leave a raised load unless your QuickJack Frames are engaged on a locking position. If you do not want to engage them on a locking position, lower the raised load back down to the ground.

Hydraulic System Warnings

⚠ **WARNING** Failure to observe these precautions can result in serious personal injury, including, in rare cases, death.

- All Hydraulic Hose connections must be correctly fastened together before using your QuickJack.
- Do not attempt to connect or disconnect Hydraulic Hoses while equipment is loaded or while the Hydraulic System is under pressure.
- Keep the Quick-Connect Fittings clean and free from debris.
- Use every precaution to guard against dirt entering the Hydraulic System.
- Keep bare hands away from Hydraulic Fluid; always wear gloves when handling Hydraulic Cylinders and Hydraulic Hoses.
- When dealing with Hydraulic Fluid, observe the safety instructions from the manufacturer.
- Use protective equipment (safety goggles, protective gloves, suitable working clothes, safety boots, and so on) when dealing with the Hydraulic System.
- If Hydraulic Fluid comes into contact with the eyes, gets into the bloodstream, or is swallowed, seek immediate medical attention.

Maintenance

Refer to ANSI/ALI ALIS Standard (R2015) *Safety Requirements for Installation and Service of Automotive Lifts* for more information about safely servicing your QuickJack.

⚠ **WARNING:** Remove power from your QuickJack before performing ***any*** maintenance! The QuickJack must be de-energized and you must take steps to make sure that it cannot be re-energized until all maintenance is complete.

Reorder labels and worn, damaged, or broken parts from **quickjack.com/replacement-parts**. Only use factory-supplied parts as replacement parts.

All maintenance tasks can be performed by the owner/operator of the QuickJack.

To maintain your QuickJack:

- **Daily**. Make a visual inspection of all moving parts and check for damage or excessive wear. Replace any damaged or worn parts before equipment is put back into operation.
- **Daily**. Keep all QuickJack components clean.
- **Daily**. Make sure the Safety Locks are in good operating condition. *Do not use your QuickJack if the Safety Locks are damaged or excessively worn*.
- **Daily**. Inspect Lift Blocks for damage or excessive wear. Replace as required.
- **Weekly**. Check all hose and fitting connections to make sure they are tight.
- **Monthly**. Lubricate all hinge points and check for excessive wear.
- **Monthly**. Check Air Cylinders to make sure they have the correct amount of pressure.
- **Every other month**. Check Hydraulic Fluid levels and refill if required.
- **When noticed**. Replace all caution, warning, and safety-related labels if illegible or missing.

Lubrication Points

QuickJack recommends using white lithium grease (or equivalent) and a grease gun with an appropriate tip (a Lube-Link™, for example) for lubrication. Lubrication points are shown below.

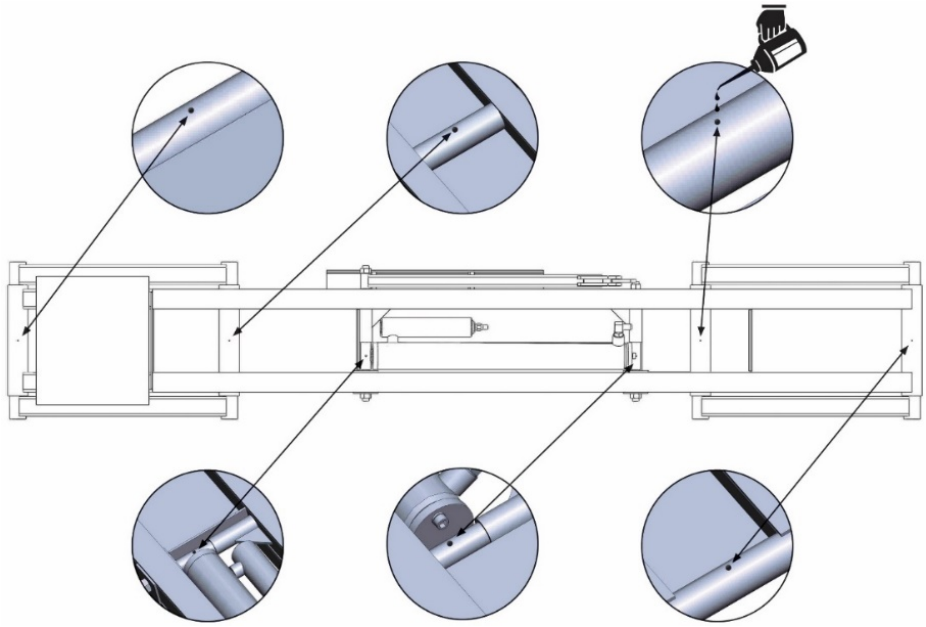

About Outdoor Operation

Your QuickJack is approved for indoor installation and use only. ***Outdoor installation is prohibited***.

Your QuickJack is portable, however, so if you end up taking it outdoors, remember to protect it from the weather (for example, from falling dirt, rain, sleet, and snow).

Here are some additional things to consider if you end up taking your QuickJack outside:

- **Extreme environmental conditions must be avoided**. The QuickJack warranty does not cover damage from rain, snow, sleet, excessive humidity, corrosive agents, hazardous and/or combustible fibers and flyings, or other contaminants. Keep your QuickJack protected from these environmental conditions at all times.
- **The QuickJack lifetime may be reduced**. Taking a QuickJack outside means it is subject to a harsher environment: a QuickJack ages more quickly the more it is outside.
- **Maintenance and replacement parts costs may increase**. The longer you keep your QuickJack outside, even when protected from the weather, the more often it will need maintenance: metal parts rust, plastic parts break down and dry out, hydraulic fluid gets dirty faster, and so on. Keeping your QuickJack outside for long periods is usually going to require extra maintenance and more frequent replacement parts.

Here are some things customers have told us they did with QuickJacks they took outside:

- **Move it back inside when done**. It may seem obvious, but here it is: when you are done with your QuickJack outside, even if it was protected from the weather, bring it back inside and thoroughly clean it.
- **Cover the Power Unit**. ***This one is really important***. The Power Unit includes an electric motor. If that motor gets wet, people could get electrocuted, a fire could start, and almost certainly the motor will short circuit and stop functioning. ***These things are not covered by the QuickJack warranty***. This advice applies your QuickJack at all times; *keep the Power Unit protected from all sources of moisture*.
- **Put up a carport canopy, party tent, or other structure**. And then put the QuickJack under the structure. It blocks the sun and the rain, reducing the impact the outside environment has on the QuickJack.
- **Use Ground Fault Circuit Interrupter (GFCI) protection**. If available, use a GFCI circuit breaker in the service panel (breaker box) to protect the entire circuit.
- **Increase the maintenance**. If the maintenance instructions say to do something every day, check it twice a day; if they say to do something once a week, check it two times a week; and so on. This will help minimize the impact the outside environment has on your QuickJack.
- **Increase the replacement parts**. Parts on a QuickJack you take outside are not going to last as long as normal. Be prepared to start ordering replacement parts sooner.

Troubleshooting

This section describes how to troubleshoot your QuickJack. All repair work ***must*** be done by qualified personnel.

⚠ **WARNING** ***Only use factory-supplied parts as replacement parts***. If you use parts from a different source, you void your warranty and compromise the safety of everyone who uses the QuickJack.

Note: If your QuickJack is not functioning correctly, you ***must*** stop using it until it is fixed.

Issue	**Action to Take**
Frames do not go up or down.	Make sure the Power Unit is getting appropriate power; if not, check the circuit breaker. Make sure none of the Hydraulic Hoses are pinched or leaking. Make sure there is sufficient Hydraulic Fluid in the Fluid Reservoir. Bleed the cylinders.
Frames do not come down.	**Make sure there is a Vehicle on the Frames**; if not, add one (the QuickJack is designed to work with weight). Check the pressure in the Air Cylinders; inflate to 40 to 50 PSI, but do not exceed 50 PSI.
Frames are stuck at full height with no weight.	QuickJack Frames require weight to come down from a fully raised position. Refer to **Frames at Full Height with No Load**.
Frames do not rise from a zero net rise position.	QuickJack Frames cannot raise a full load from a completely flat position. Refer to **Vehicle with No Tires Fully Lowered**.
Hydraulic Fluid is dirty.	Replace the dirty Hydraulic Fluid with clean fluids.
Jack makes odd noises	Lubricate hinge points using white lithium grease.
Frames lower without using the Pendant Control.	Make sure the QuickJack is engaged on a locking position (if it is not, the Frames will slowly lower).
Air Cylinder is not holding pressure.	Make sure the valve core inside the valve stem is tightly in place; that is, it is not letting air escape. You can use a standard valve tool to check. Do not overtighten the valve core.
Quick-Connect Fittings becoming increasingly difficult to connect.	Pressure is building up in the hydraulic system. To release it, hold **Down** on the Pendant Control for ~5 seconds ***after*** the Frames reach the ground, allowing as much Hydraulic Fluid as possible to return to the Fluid Reservoir.
Frames stop raising before reaching the Top Locking Position	There is not enough Hydraulic Fluid in the reservoir. Return the QuickJack Frames to the ground, then add fluid to the reservoir to .5 inch below the fill hole.
No pressure from pump.	Prime the pump.

If you continue to have an issue, visit **quickjack.com/support** or contact QuickJack Support at **support@quickjack.com**, (888) 262-3880, or (805) 933-9970.

Frames at Full Height with No Load

The issue is that the QuickJack is designed and engineered to work with the weight of a Vehicle on it. If there is no Vehicle on the Frames at full height, the QuickJack can occasionally get stuck.

Do not raise the QuickJack Frames unless there is the weight of a Vehicle on them.

Methods that have fixed this issue include:

- Use lifting equipment to get weight onto the QuickJack Frames.
- Reduce the hydraulic force that is holding the QuickJack Frames. If you do this, keep a rag handy in case there is some Hydraulic Fluid leakage.

If you are still unable to lower the frames, contact QuickJack Technical Support for assistance.

Vehicle with No Tires Fully Lowered

The issue is that there is too much weight on the QuickJack Frames with no room to get upward force started. You need to reduce the weight by at least half or raise the Vehicle off the QuickJack Frames some different way.

Methods that have fixed this issue include:

- Use a floor jack to raise the Vehicle from four to six inches.
- Using lifting equipment to raise the Vehicle.

If you are still unable to raise your Vehicle, contact QuickJack Technical Support for assistance.

Priming the Pump

Priming the pump pushes Hydraulic Fluid into the system. On rare occasions, there may not be enough Hydraulic Fluid in the system for the pump to produce force. Priming the pump usually resolves this issue.

Note: If your Power Unit does not have a relief valve, you cannot prime it.

To prime the pump:

1. On the Power Unit, remove the relief valve, then place a rag over the cavity and hold it there.
2. Press **Up** on the Pendant Control for a few seconds (until you feel pressure on the rag).
3. Reinstall the relief valve.

   The pump should now have enough Hydraulic Fluid to operate normally.

Relieving Hydraulic Pressure from the Hydraulic Hoses

After placing both Frames on a Locking Position, customers occasionally fail to hold down the **Down** Button for an extra five seconds to relieve the Hydraulic Pressure in the Hoses. Failure to do so makes it extremely difficult to reconnect the Hydraulic Hoses after they have been disconnected.

Important Do ***not*** press the Seal on the Quick Disconnect Fittings in an effort to release the pressure, Hydraulic Fluid will spray out from the Hydraulic Hoses while under pressure.

⚠ **WARNING** Hydraulic Fluid under pressure is dangerous. You must wear OSHA-approved (publication 3151) Personal Protective Equipment ***at all times*** when handling hydraulic components: eye protection and leather gloves are mandatory.

How to release Hydraulic Pressure from the Hydraulic Hoses:

1. Release the air pressure from the Air Cylinder by pressing the Pin in the Shrader Valve.
2. Reconnect the Hydraulic Hoses at the Quick-Disconnect Fittings.
3. Press **Up** on the Pendant Control to raise the Frames up and off the Locking Position.
4. Completely lower the Lift back to the ground.
5. Re-pressurize the Air Cylinder to 40-50 psi.

Wiring Diagrams

12 VDC Wiring Diagram

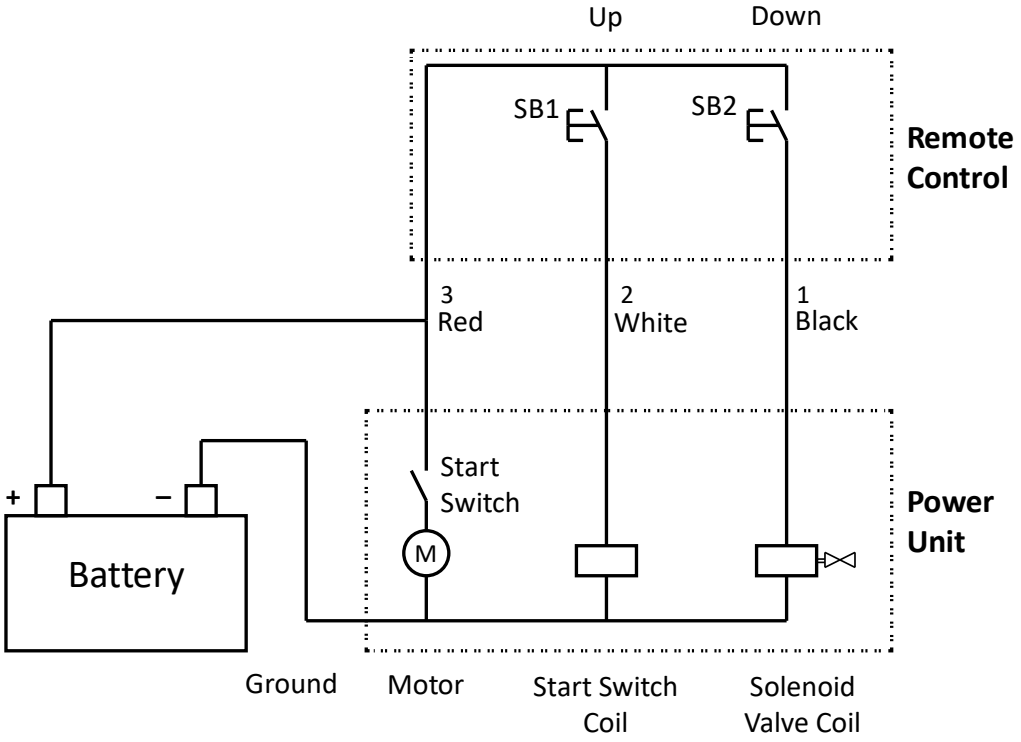

208-230 VAC Wiring Diagram

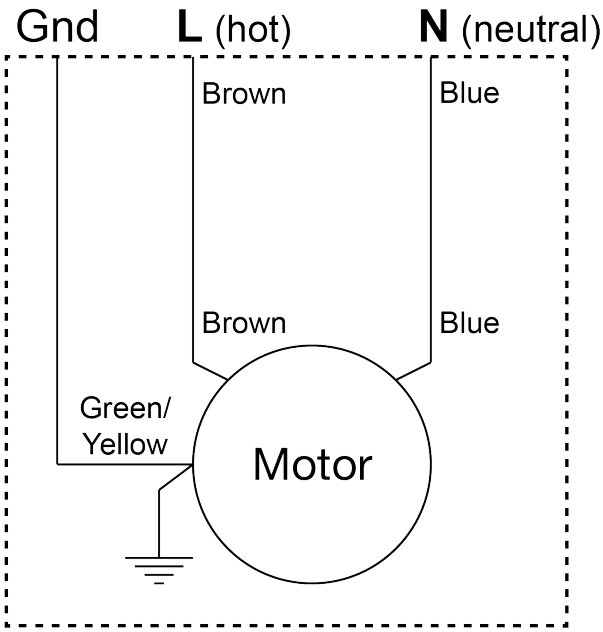

Make sure to follow the 208-230 VAC electrical rules for the country in which you are using the unit.

220 VAC Wiring Diagram (CE-approved)

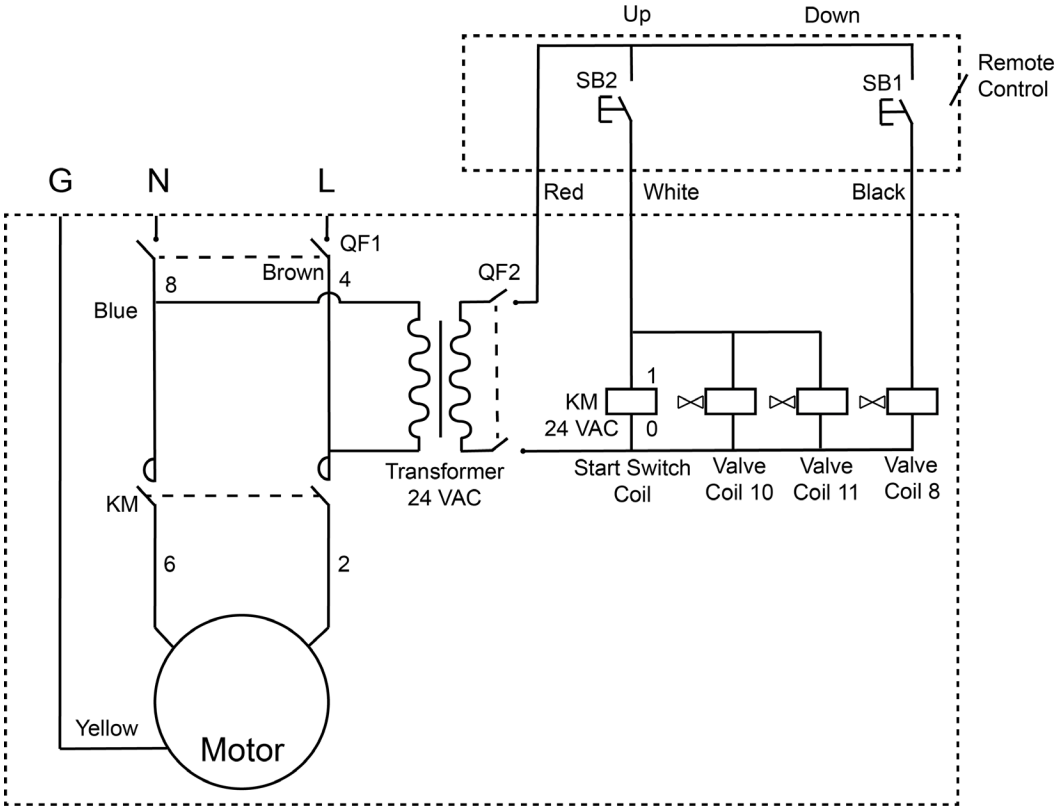

Labels

A

B

C

D

E

F

G

QUICKJACK™

P/N 5905745

H

WARNING SAFETY LOCK DEVICE Always confirm in locked position when platforms are raised. AVERTISSEMENT MÉCANISME DE VERROUILLAGE Toujours vérifier qu'il est en position verrouillée lorsque les plateformes sont levées.

I

CAUTION KEEP HANDS CLEAR OF PINCH POINTS DO NOT ATTEMPT TO LIFT ANY LOAD ON UPPERFRAME RAILS. USE RUBBER CONTACT BLOCKS ONLY. ATTENTION TENIR LES MAINS À L'ÉCART DES POINTS DE PINCEMENT NE PAS TENTER DE LEVER DES CHARGES PAR LES RAILS SUPÉRIEURS DU CADRE. UTILISER LES CALES D'APPUI EN CAOUTCHOUC.

J

ATTENTION

PN 5905432

POSITION JACK FRAMES UNDER PARKED VEHICLE. NEVER DRIVE OVER OR ON TOP OF JACK FRAMES.

PLACER LES CADRES DE LEVAGE SOUS LE VÉHICULE STATIONNÉ. NE JAMAIS ROULER SUR OU AU-DESSUS DES CADRES DE LEVAGE.

K

DANGER

PN 5905434

AVOID SERIOUS INJURY OR DEATH FROM EXPLOSION. MAXIMUM PRESSURE ON AIR BOTTLE SHOULD NOT EXCEED 50-PSI/3.4 BAR WITH JACK FRAMES IN FULLY LOWERED POSITION. LOCK-OUT POWER SOURCE AND BLEED OFF AIR PRESSURE BEFORE SERVICING.

ÉVITER LES BLESSURES GRAVES ET LA MORT PAR EXPLOSION. LA PRESSION MAXIMALE SUR LE RÉSERVOIR D'AIR NE DOIT PAS DÉPASSER 50 PSI/3,4 BAR LORSQUE LES CADRES DE LEVAGE SONT DANS LA POSITION LA PLUS BASSE. VERROUILLER LA SOURCE D'ALIMENTATION ET PURGER LA PRESSION D'AIR AVANT TOUTE INTERVENTION.

L

ATTENTION PN 5905056

MAX. CAPACITY / PAIR: 3,500 LBS.
CAPACITÉ MAX. / PAIRE: 1,588 KG

M

ATTENTION PN 5905436

MAX. CAPACITY / PAIR: 5,000 LBS.
CAPACITÉ MAX. / PAIRE: 2,268 KG

N

ATTENTION PN 5905438

MAX. CAPACITY / PAIR: 7,000 LBS.
CAPACITÉ MAX. / PAIRE: 3,175 KG

O

ATTENTION PN 5905057

MAX. CAPACITY / PAIR: 6,000 LBS.
CAPACITÉ MAX. / PAIRE: 2,722 KG

P

QUICKJACK™ 1645 Lemonwood Dr. Santa Paula, CA USA

MODEL NUMBER / NUMÉRO DE MODÈLE

DESCRIPTION

LIFT CAPACITY (PAIR) / CAPACITÉ DE LEVAGE (PAIRE)

DATE OF MFG. / FABRICATION

UPC / CUP

SERIAL NUMBER NUMÉRO DE SÉRIE

DANGER! Disconnect Power Before Servicing Couper l'alimentation avant toute intervention.

CE EAC

WARRANTY VOID IF DATA PLATE IS REMOVED
GARANTIE NULLE SI LA PLAQUE DE DATE A ÉTÉ ENLEVÉE

MADE IN CHINA / FABRIQUÉ EN CHINE

PN 5905433

Q

CAUTION ROUTE HYDRAULIC LINE *UNDER* THIS SECTION OF THE FRAME. ATTENTION FAIRE PASSER LA LIGNE HYDRAULIQUE *SOUS* CETTE PARTIE DU CADRE.

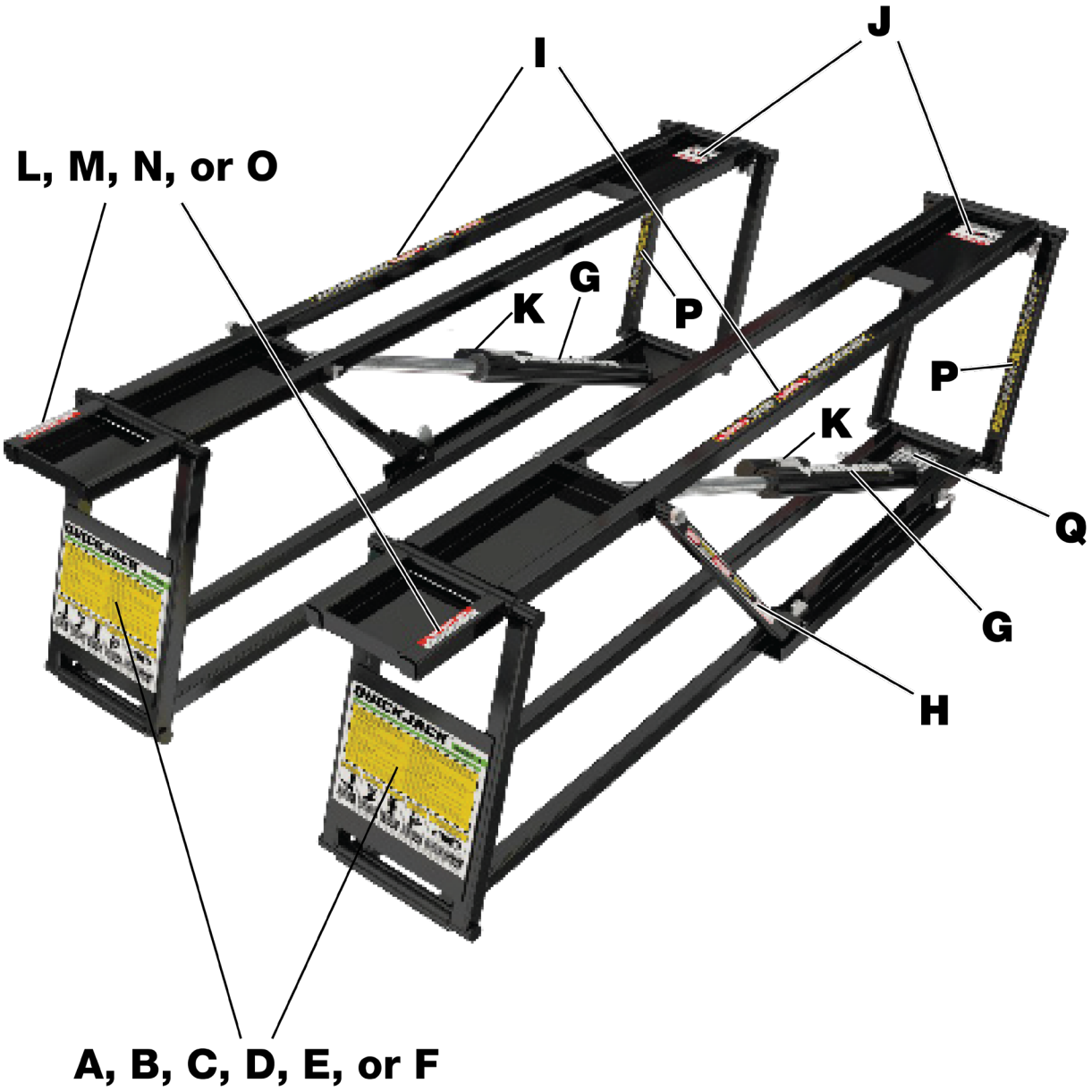
J
I
L, M, N, or O
G
K
P
P
K
Q
G
H
A, B, C, D, E, or F

Parts Sheets

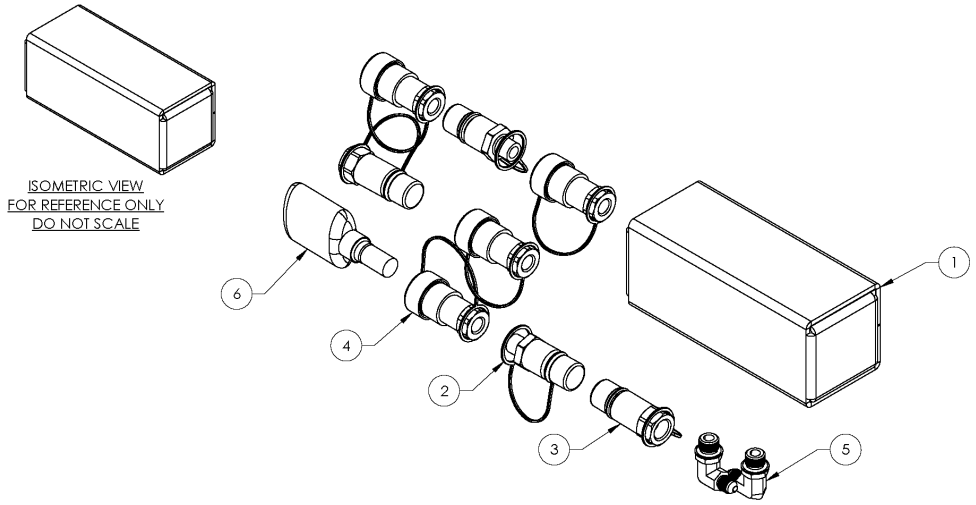

ITEM NO	PART NUMBER	DESCRIPTION	QTY	REV
1	5910092	QUICKJACK PARTS BAG BOX	1	B
2	5550413	FTG NPL -06 ORB x ¼ NS; QUICK-CON COUP MALE	2	--
3	5550032	FTG NPL-04 NPT FX1/4 QUICK-CONNECTOR COUPLER MALE; NON SPILL DESIGN	2	--
4	5550031	FTG NPL-04 NPT F x 1/4 QUICK-CONNECTOR COUPLER FEMALE; NON SPILL DESIGN	4	--
5	5550103	FTG ELB -04 JIC -06 ORB	2	--
6	5580012	LIQUID PTFE THREAD SEALANT 50ml	1	--

DO NOT SCALE DRAWING

	NAME	DATE
DRAWN	TM	10/28/2019
CHECKED	OR	09/03/2020

BendPak.
1645 LEMONWOOD DR.
SANTA PAULA, CA 93060

DIMENSIONS ARE IN MM

THIRD ANGLE PROJECTION

TITLE: QUICKJACK PARTS BAG

SIZE A | DWG. NO. 5174043 | REV B

SCALE: 1:3 | SHEET 1 OF 1

PROPRIETARY AND CONFIDENTIAL
THE INFORMATION CONTAINED IN THIS DRAWING IS THE SOLE PROPERTY OF BENDPAK INC. ANY REPRODUCTION IN PART OR AS A WHOLE WITHOUT THE WRITTEN PERMISSION OF BENDPAK INC. IS PROHIBITED.

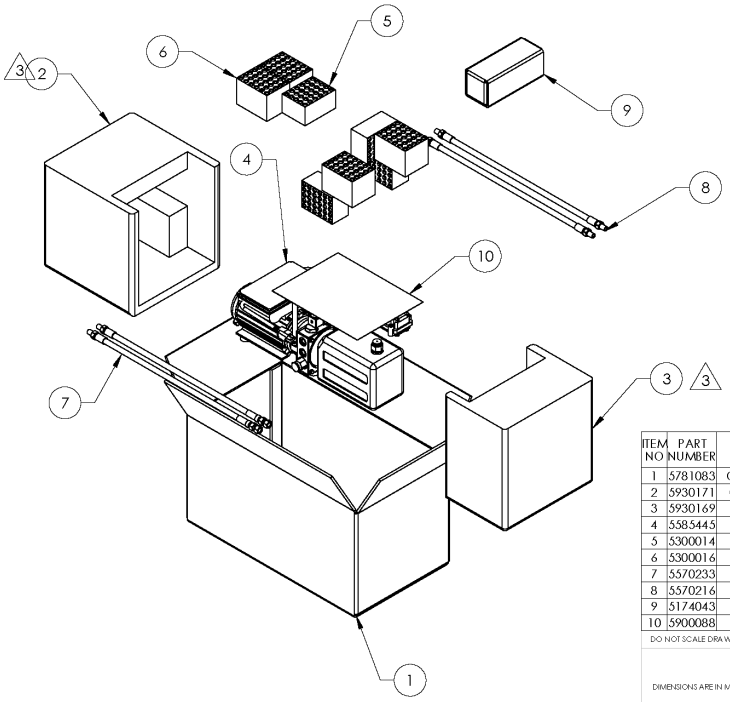

ITEM NO	PART NUMBER	DESCRIPTION	QTY	REV
1	5781083	QUICKJACK POWER UNIT PRINTED BOX 3 ENGLISH/FRENCH	1	B
2	5930171	QUICKJACK POWER UNIT BOX STYROFOAM PACKAGING, MOTOR	1	--
3	5930169	QUICKJACK POWER UNIT BOX STYROFOAM PACKAGING, TANK	1	--
4	5585445	QUICKJACK POWER UNIT AC-110	1	--
5	5300014	55mm DIMPLED RUBBER PAD	4	A
6	5300016	75mm DIMPLED RUBBER PAD	4	A
7	5570233	HOSE ASSEMBLY Ø6.4 x 929mm	2	A
8	5570216	HOSE ASSEMBLY Ø6.4 x 3810mm DS MALE	2	A
9	5174043	QUICKJACK PARTS BAG	1	B
10	5900088	DO NOT RETURN SHEET	1	--

DO NOT SCALE DRAWING

	NAME	DATE
DRAWN	TM	04/20/2018
CHECKED	OR	08/31/2020

BendPak.
1645 LEMONWOOD DR.
SANTA PAULA, CA 93060

DIMENSIONS ARE IN MM

THIRD ANGLE PROJECTION

TITLE: QUICKJACK; BOX 3 OF 3 FR-EN: 110V AC

SIZE A | DWG. NO. 5174024 | REV K

SCALE: 1:10 | SHEET 1 OF 1

PROPRIETARY AND CONFIDENTIAL
THE INFORMATION CONTAINED IN THIS DRAWING IS THE SOLE PROPERTY OF BENDPAK INC. ANY REPRODUCTION IN PART OR AS A WHOLE WITHOUT THE WRITTEN PERMISSION OF BENDPAK INC. IS PROHIBITED.

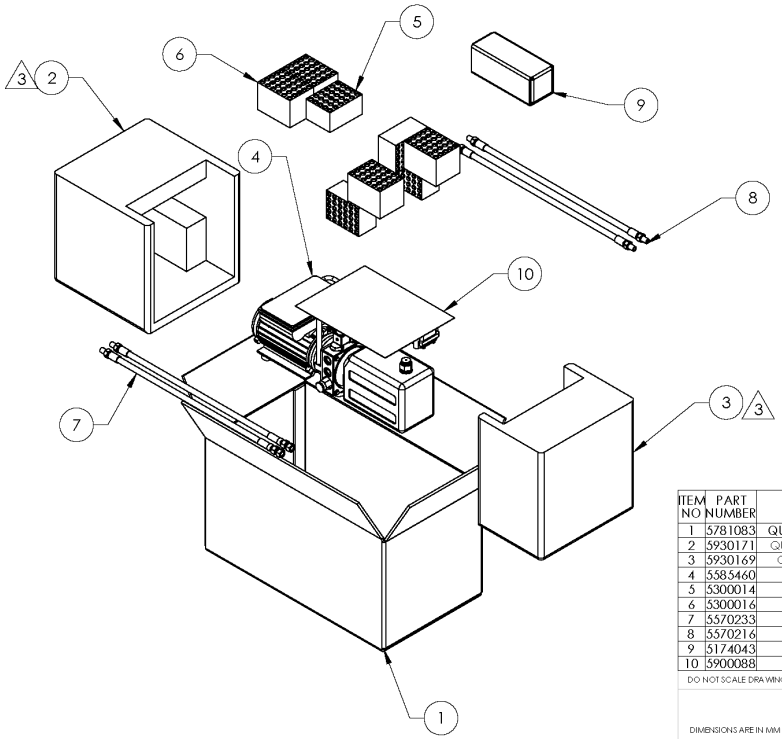

ITEM NO	PART NUMBER	DESCRIPTION	QTY	REV
1	5781083	QUICKJACK POWER UNIT PRINTED BOX 3 ENGLISH/FRENCH	1	B
2	5930171	QUICKJACK POWER UNIT BOX STYROFOAM PACKAGING, MOTOR	1	--
3	5930169	QUICKJACK POWER UNIT BOX STYROFOAM PACKAGING, TANK	1	--
4	5585460	QUICKJACK POWER UINT 208-240V AC	1	--
5	5300014	55mm DIMPLED RUBBER PAD	4	A
6	5300016	75mm DIMPLED RUBBER PAD	4	A
7	5570233	HOSE ASSEMBLY Ø6.4 x 929mm	2	A
8	5570216	HOSE ASSEMBLY Ø6.4 x 3810mm DS MALE	2	A
9	5174043	QUICKJACK PARTS BAG	1	B
10	5900088	DO NOT RETURN SHEET	1	--

DO NOT SCALE DRAWING

	NAME	DATE
DRAWN	TM	04/20/2018
CHECKED	OR	08/31/2020

BendPak.
1645 LEMONWOOD DR.
SANTA PAULA, CA 93060

DIMENSIONS ARE IN MM

THIRD ANGLE PROJECTION

TITLE:
QUICKJACK; BOX 3 OF 3
FR-EN: 220V AC

SIZE A | DWG. NO. 5174025 | REV K

SCALE: 1:10 | SHEET 1 OF 1

PROPRIETARY AND CONFIDENTIAL
THE INFORMATION CONTAINED IN THIS DRAWING IS THE SOLE PROPERTY OF BENDPAK INC. ANY REPRODUCTION IN PART OR AS A WHOLE WITHOUT THE WRITTEN PERMISSION OF BENDPAK INC. IS PROHIBITED.

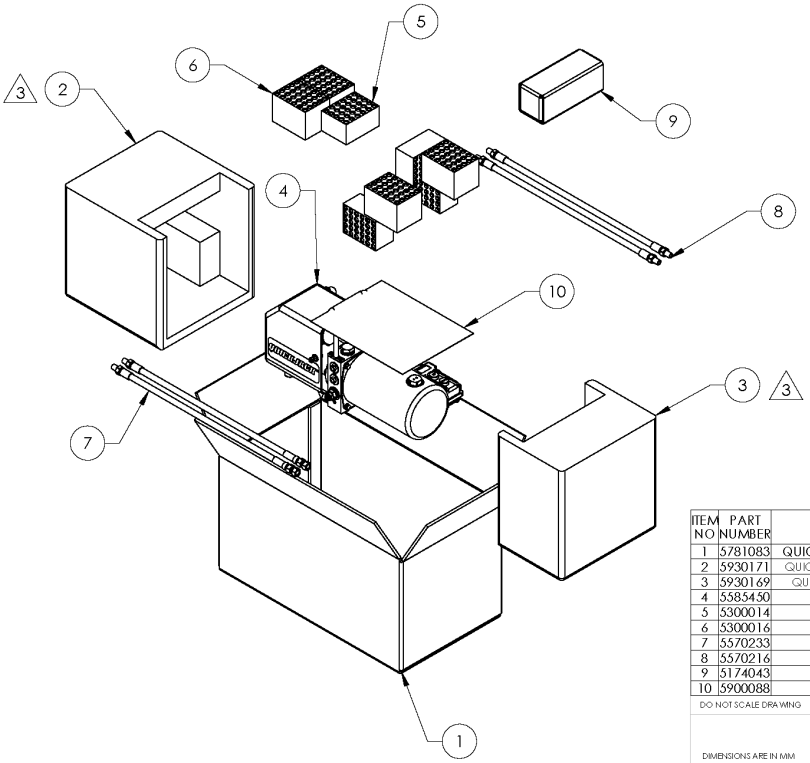

ITEM NO	PART NUMBER	DESCRIPTION	QTY	REV
1	5781083	QUICKJACK POWER UNIT PRINTED BOX 3 ENGLISH/FRENCH	1	B
2	5930171	QUICKJACK POWER UNIT BOX STYROFOAM PACKAGING, MOTOR	1	--
3	5930169	QUICKJACK POWER UNIT BOX STYROFOAM PACKAGING, TANK	1	--
4	5585450	QUICKJACK POWER UNIT 12V DC	1	--
5	5300014	55mm DIMPLED RUBBER PAD	4	A
6	5300016	75mm DIMPLED RUBBER PAD	4	A
7	5570233	HOSE ASSEMBLY Ø6.4 x 929mm	2	A
8	5570216	HOSE ASSEMBLY Ø6.4 x 3810mm DS MALE	2	A
9	5174043	QUICKJACK PARTS BAG	1	B
10	5900088	DO NOT RETURN SHEET	1	--

DO NOT SCALE DRAWING

	NAME	DATE
DRAWN	TM	04/20/2018
CHECKED	OR	08/31/2020

BendPak.
1645 LEMONWOOD DR.
SANTA PAULA, CA 93060

DIMENSIONS ARE IN MM

THIRD ANGLE PROJECTION

TITLE:
QUICKJACK; BOX 3 OF 3
FR-EN: 12V DC

SIZE A | DWG. NO. 5174022 | REV K

SCALE: 1:10 | SHEET 1 OF 1

PROPRIETARY AND CONFIDENTIAL
THE INFORMATION CONTAINED IN THIS DRAWING IS THE SOLE PROPERTY OF BENDPAK INC. ANY REPRODUCTION IN PART OR AS A WHOLE WITHOUT THE WRITTEN PERMISSION OF BENDPAK INC. IS PROHIBITED.

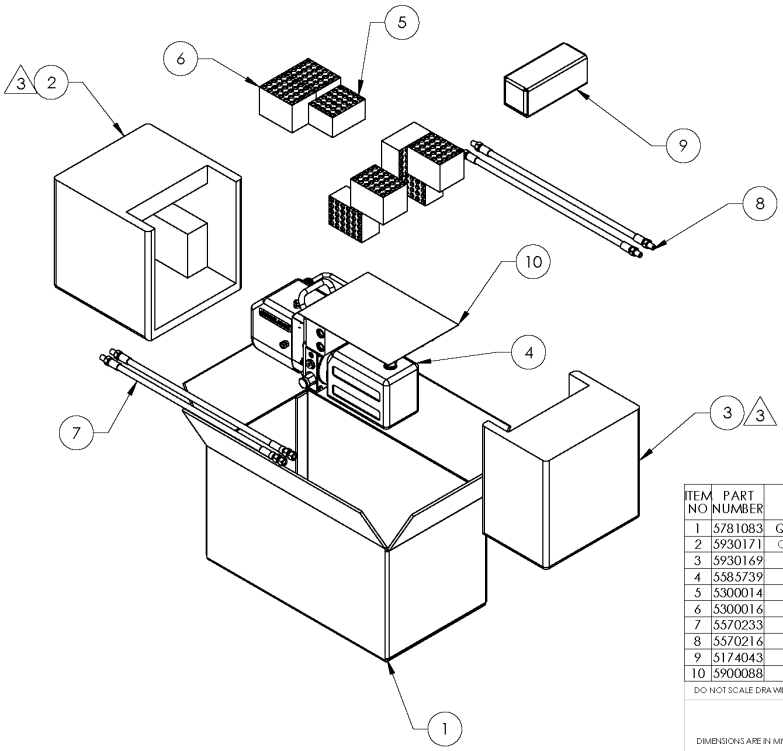

ITEM NO	PART NUMBER	DESCRIPTION	QTY	REV
1	5781083	QUICKJACK POWER UNIT PRINTED BOX 3 ENGLISH/FRENCH	1	B
2	5930171	QUICKJACK POWER UNIT BOX STYROFOAM PACKAGING, MOTOR	1	--
3	5930169	QUICKJACK POWER UNIT BOX STYROFOAM PACKAGING, TANK	1	--
4	5585739	QUICKJACK POWER UNIT 12V DC CE	1	--
5	5300014	55mm DIMPLED RUBBER PAD	4	A
6	5300016	75mm DIMPLED RUBBER PAD	4	A
7	5570233	HOSE ASSEMBLY Ø6.4 x 929mm	2	A
8	5570216	HOSE ASSEMBLY Ø6.4 x 3810mm DS MALE	2	A
9	5174043	QUICKJACK PARTS BAG	1	B
10	5900088	DO NOT RETURN SHEET	1	--

DO NOT SCALE DRAWING

	NAME	DATE
DRAWN	TM	04/20/2018
CHECKED	OR	08/31/2020

BendPak.
1645 LEMONWOOD DR.
SANTA PAULA, CA 93060

DIMENSIONS ARE IN MM

THIRD ANGLE PROJECTION

TITLE: QUICKJACK; BOX 3 OF 3 FR-EN: 12V DC CE

SIZE A | DWG. NO. 5174023 | REV K

SCALE: 1:10 | SHEET 1 OF 1

PROPRIETARY AND CONFIDENTIAL
THE INFORMATION CONTAINED IN THIS DRAWING IS THE SOLE PROPERTY OF BENDPAK INC. ANY REPRODUCTION IN PART OR AS A WHOLE WITHOUT THE WRITTEN PERMISSION OF BENDPAK INC. IS PROHIBITED.

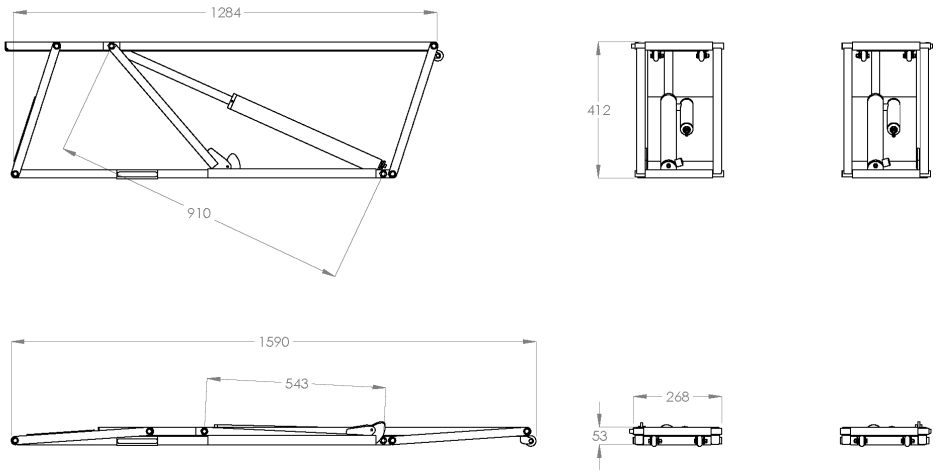

BendPak.
1645 LEMONWOOD DR.
SANTA PAULA, CA 93060

TITLE: BL-3500SLX PRODUCTION LIFT VER D

SIZE A | DWG. NO. 5260588 | REV U

SCALE: 1:12 | SHEET 2 OF 2

REVISION				
REV	DESCRIPTION	DATE	EDITED BY	ECO#
Q Q-001	UPDATED BOM REVISION UPDATED NEXT ASSEMBLY	07/20/2018 09/20/2018	TS CA	00976 00999
R	UPDATED BOM REVISION	11/15/2108	TS	01029
T	UPDATED BOM REVISION	01/15/2019	TM	01044

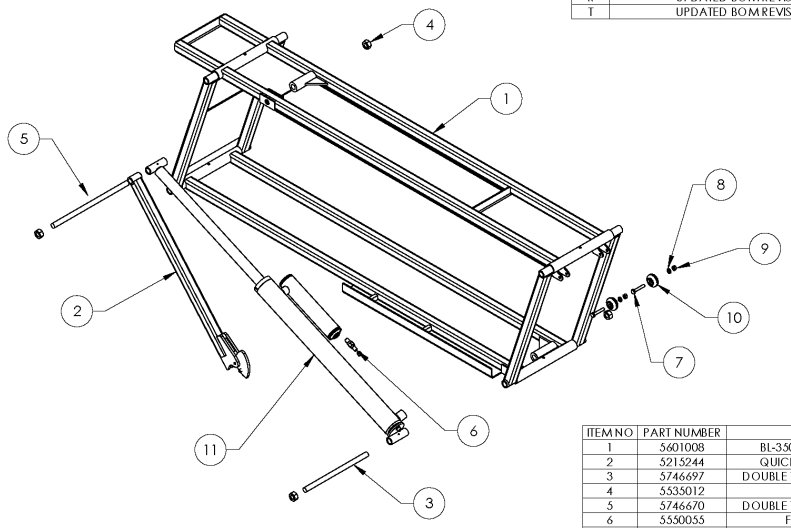

ITEM NO	PART NUMBER	DESCRIPTION	QTY	REV
1	5601008	BL-3500SLX FRAME WELDMENT, L.H.	1	K
2	5215244	QUICKJACK SAFETY BAR ASSEMBLY	1	C
3	5746697	DOUBLE THREADED ROD M12 x 1.75 x 212	1	B
4	5535012	NUT M12x1.75 NL	4	-
5	5746670	DOUBLE THREADED ROD M12 x 1.75 x 254	1	G
6	5550055	FTG NPL -02 STM x -02 NPT	1	-
7	5530027	HHB M6 x 1.0 x 35	2	-
8	5545026	WASHER M6 x Ø12 SL	2	-
9	5535357	NUT M6 x 1.0 NL	2	-
10	5716192	QUICKJACK POLYURETHANE WHEEL	2	E
11	5502520	OFFSET CYLINDER ASSEMBLY Ø1.5 x 15	1	M

WHERE USED
BL-3500SLX

NOTE: UNLESS OTHERWISE SPECIFIED.
1. SEE SHIPPING INSTRUCTIONS FOR FINAL PACKAGING
2. ASSEMBLE ITEMS AS SHOWN

NEXT ASSEMBLY
5215789
5260588

DO NOT SCALE DRAWING

	NAME	DATE
DRAWN	TM	06/18/2015
CHECKED	CA	01/30/2019

DIMENSIONS ARE IN MM

THIRD ANGLE PROJECTION

BendPak.
1645 LEMONWOOD DR.
SANTA PAULA, CA 93060

TITLE: BL-3500SLX FRAME ASSEMBLY, L.H.

SIZE A | DWG. NO. 5215416 | REV T

SCALE: 1:10 | SHEET 1 OF 1

PROPRIETARY AND CONFIDENTIAL
THE INFORMATION CONTAINED IN THIS DRAWING IS THE SOLE PROPERTY OF BENDPAK INC. ANY REPRODUCTION IN PART OR AS A WHOLE WITHOUT THE WRITTEN PERMISSION OF BENDPAK INC. IS PROHIBITED.

REVISION				
REV	DESCRIPTION	DATE	EDITED BY	ECO#
Q Q-001	UPDATED BOM REVISION UPDATED NEXT ASSEMBLY	07/20/2018 09/202/018	TS CA	00976 00999
R	UPDATED BOM REVISION	11/15/2018	TS	01029
T	UPDATED BOM REVISION	01/15/2019	TM	01044

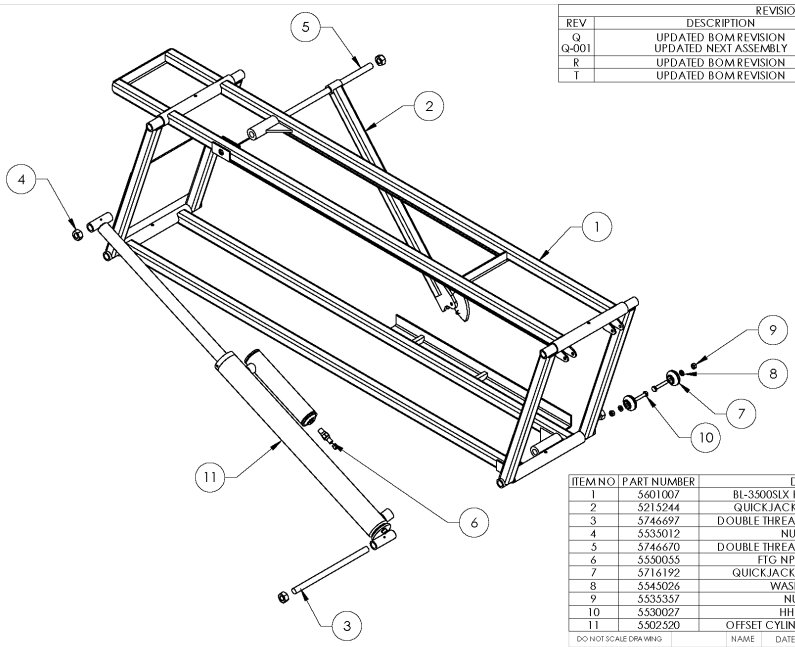

ITEM NO	PART NUMBER	DESCRIPTION	QTY	REV
1	5601007	BL-3500SLX FRAME WELDMENT, R.H.	1	J
2	5215244	QUICKJACK SAFETY BAR ASSEMBLY	1	C
3	5746697	DOUBLE THREADED ROD M12 x 1.75 x 212	1	B
4	5535012	NUT M12x1.75 NL	4	-
5	5746670	DOUBLE THREADED ROD M12 x 1.75 x 254	1	G
6	5550055	FTG NPL -02 STM x -02 NPT	1	-
7	5716192	QUICKJACK POLYURETHANE WHEEL	2	E
8	5545026	WASHER M6 x Ø12 SL	2	-
9	5535357	NUT M6 x 1.0 NL	2	-
10	5530027	HHB M6 x 1.0 x 35	2	-
11	5502520	OFFSET CYLINDER ASSEMBLY Ø1.5 x 15	1	M

WHERE USED
BL-3500SLX

NOTE: UNLESS OTHERWISE SPECIFIED.
1. SEE SHIPPING INSTRUCTIONS FOR FINAL PACKAGING
2. ASSEMBLE ITEMS AS SHOWN

NEXT ASSEMBLY
5215790
5260588

DO NOT SCALE DRAWING

	NAME	DATE
DRAWN	TM	06/12/2015
CHECKED	CA	01/30/2019

DIMENSIONS ARE IN MM

THIRD ANGLE PROJECTION

BendPak.
1645 LEMONWOOD DR.
SANTA PAULA, CA 93060

TITLE: BL-3500SLX FRAME ASSEMBLY, R.H.

SIZE A | DWG. NO. 5215415 | REV T

SCALE: 1:8 | SHEET 1 OF 1

PROPRIETARY AND CONFIDENTIAL
THE INFORMATION CONTAINED IN THIS DRAWING IS THE SOLE PROPERTY OF BENDPAK INC. ANY REPRODUCTION IN PART OR AS A WHOLE WITHOUT THE WRITTEN PERMISSION OF BENDPAK INC. IS PROHIBITED.

REVISION				
REV	DESCRIPTION	DATE	EDITED BY	ECO#
J	UPDATED BOM REVISION	07/23/2018	TS	00976
J-001	UPDATED NEXT ASSEMBLY	08/27/2018	TM	00991
K	UPDATED BOM REVISION	11/16/2018	TS	01029
L	UPDATED BOM REVISION	01/16/2019	TM	01044

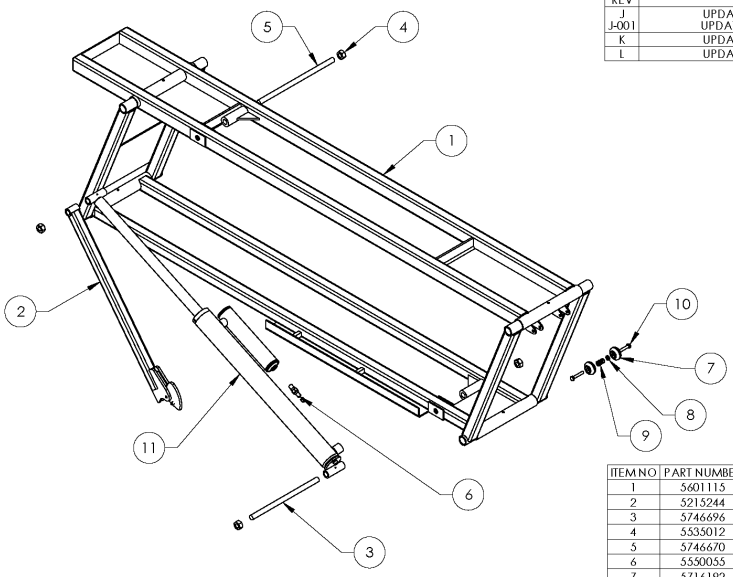

ITEM NO	PART NUMBER	DESCRIPTION	QTY	REV
1	5601115	BL-5000SLX FRAME WELDMENT, L.H.	1	D
2	5215244	QUICKJACK SAFETY BAR ASSEMBLY	1	C
3	5746696	DOUBLE THREADED ROD M12 x 1.75 x 227	1	E
4	5535012	NUT M12x1.75 NL	4	-
5	5746670	DOUBLE THREADED ROD M12 x 1.75 x 254	1	-
6	5550055	FTG NPL -02 STM x -02 NPT	1	-
7	5716192	QUICKJACK POLYURETHANE WHEEL	2	E
8	5545026	WASHER M6 x Ø12 SL	2	-
9	5535357	NUT M6 x 1.0 NL	2	-
10	5530027	HHB M6 x 1.0 x 35	2	-
11	5502520	OFFSET CYLINDER ASSEMBLY Ø1.5 x 15	1	M

WHERE USED
BL-5000SLX

NOTE: UNLESS OTHERWISE SPECIFIED.
1. SEE SHIPPING INSTRUCTIONS FOR FINAL PACKAGING
2. ASSEMBLE ITEMS AS SHOWN

NEXT ASSEMBLY
5215748
5260586

DO NOT SCALE DRAWING

	NAME	DATE
DRAWN	TM	10/13/2016
CHECKED	CA	01/30/2019

DIMENSIONS ARE IN MM

THIRD ANGLE PROJECTION

BendPak.
1645 LEMONWOOD DR.
SANTA PAULA, CA 93060

TITLE: BL-5000SLX FRAME ASSEMBLY, L.H.

SIZE A | DWG. NO. 5215478 | REV L

SCALE: 1:10 | SHEET 1 OF 1

PROPRIETARY AND CONFIDENTIAL
THE INFORMATION CONTAINED IN THIS DRAWING IS THE SOLE PROPERTY OF BENDPAK INC. ANY REPRODUCTION IN PART OR AS A WHOLE WITHOUT THE WRITTEN PERMISSION OF BENDPAK INC. IS PROHIBITED.

REVISION				
REV	DESCRIPTION	DATE	EDITED BY	ECO#
J	UPDATED BOM REVISION	07/23/2018	TS	00976
J-001	UPDATED NEXT ASSEMBLY	08/27/2018	TM	00991
K	UPDATED BOM REVISION	11/16/2018	TS	01029
L	UPDATED BOM REVISION	01/16/2019	TM	01044

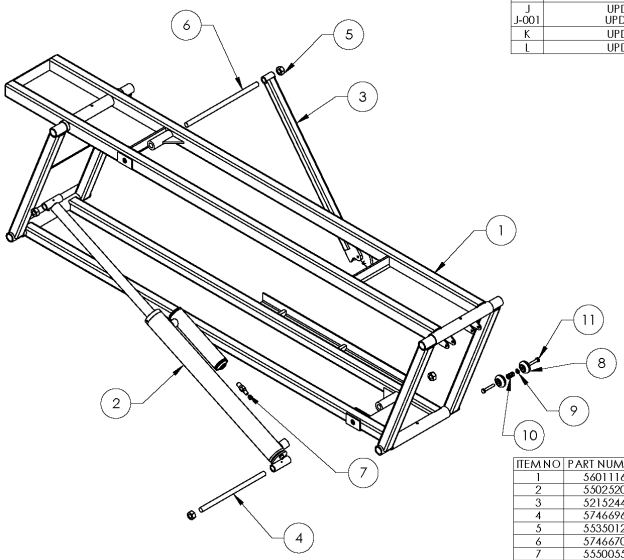

ITEM NO	PART NUMBER	DESCRIPTION	QTY	REV
1	5601116	BL-5000SLX FRAME WELDMENT, R.H.	1	D
2	5502520	OFFSET CYLINDER ASSEMBLY Ø1.5 x 15	1	M
3	5215244	QUICKJACK SAFETY BAR ASSEMBLY	1	C
4	5746696	DOUBLE THREADED ROD M12 x 1.75 x 227	1	E
5	5535012	NUT M12x1.75 NL	4	-
6	5746670	DOUBLE THREADED ROD M12 x 1.75 x 254	1	G
7	5550055	FTG NPL -02 STM x -02 NPT	1	-
8	5716192	QUICKJACK POLYURETHANE WHEEL	2	E
9	5545026	WASHER M6 x Ø12 SL	2	-
10	5535357	NUT M6 x 1.0 NL	2	-
11	5530027	HHB M6 x 1.0 x 35	2	-

WHERE USED
BL-5000SLX

NOTE: UNLESS OTHERWISE SPECIFIED.
1. SEE SHIPPING INSTRUCTIONS FOR FINAL PACKAGING
2. ASSEMBLE ITEMS AS SHOWN

NEXT ASSEMBLY
5215749
5260586

DO NOT SCALE DRAWING

	NAME	DATE
DRAWN	TM	10/17/2016
CHECKED	CA	01/30/2019

DIMENSIONS ARE IN MM

THIRD ANGLE PROJECTION

BendPak.
1645 LEMONWOOD DR.
SANTA PAULA, CA 93060

TITLE: BL-5000SLX FRAME ASSEMBLY, R.H.

SIZE A | DWG. NO. 5215480 | REV L

SCALE: 1:10 | SHEET 1 OF 1

PROPRIETARY AND CONFIDENTIAL
THE INFORMATION CONTAINED IN THIS DRAWING IS THE SOLE PROPERTY OF BENDPAK INC. ANY REPRODUCTION IN PART OR AS A WHOLE WITHOUT THE WRITTEN PERMISSION OF BENDPAK INC. IS PROHIBITED.

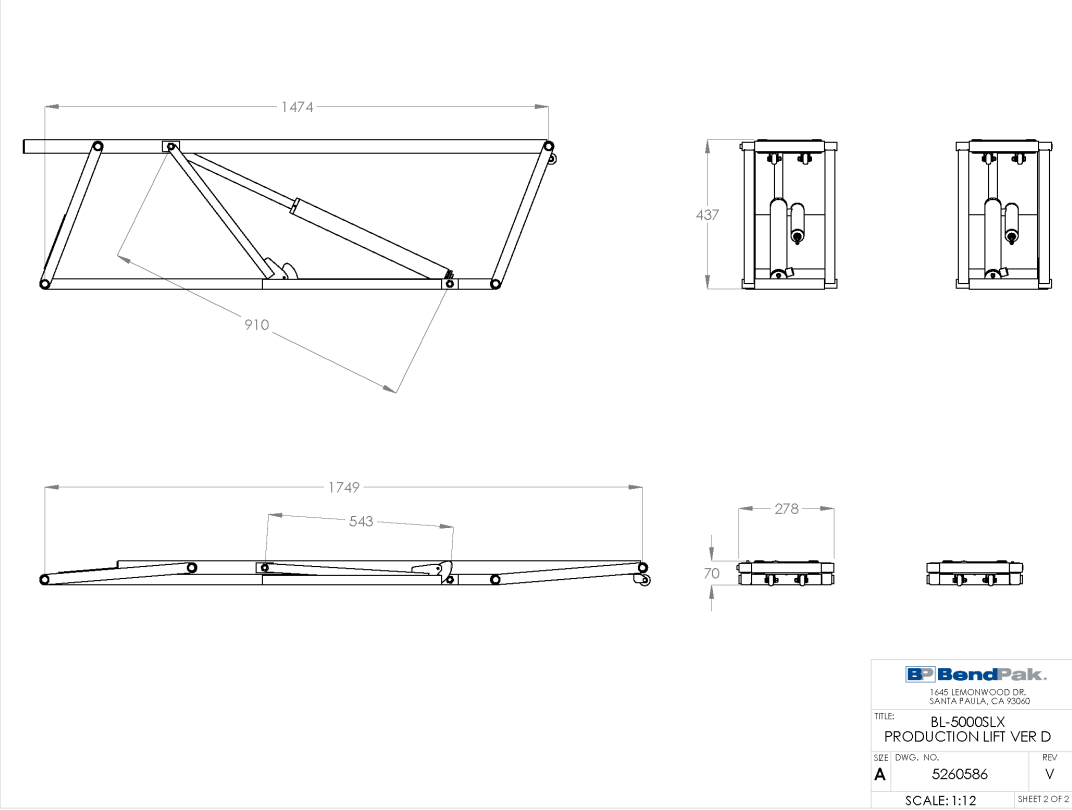
1474
910
437
1749
543
278
70
BendPak.
1645 LEMONWOOD DR.
SANTA PAULA, CA 93060
TITLE:
BL-5000SLX
PRODUCTION LIFT VER D
SIZE
A
DWG. NO.
5260586
REV
V
SCALE: 1:12
SHEET 2 OF 2

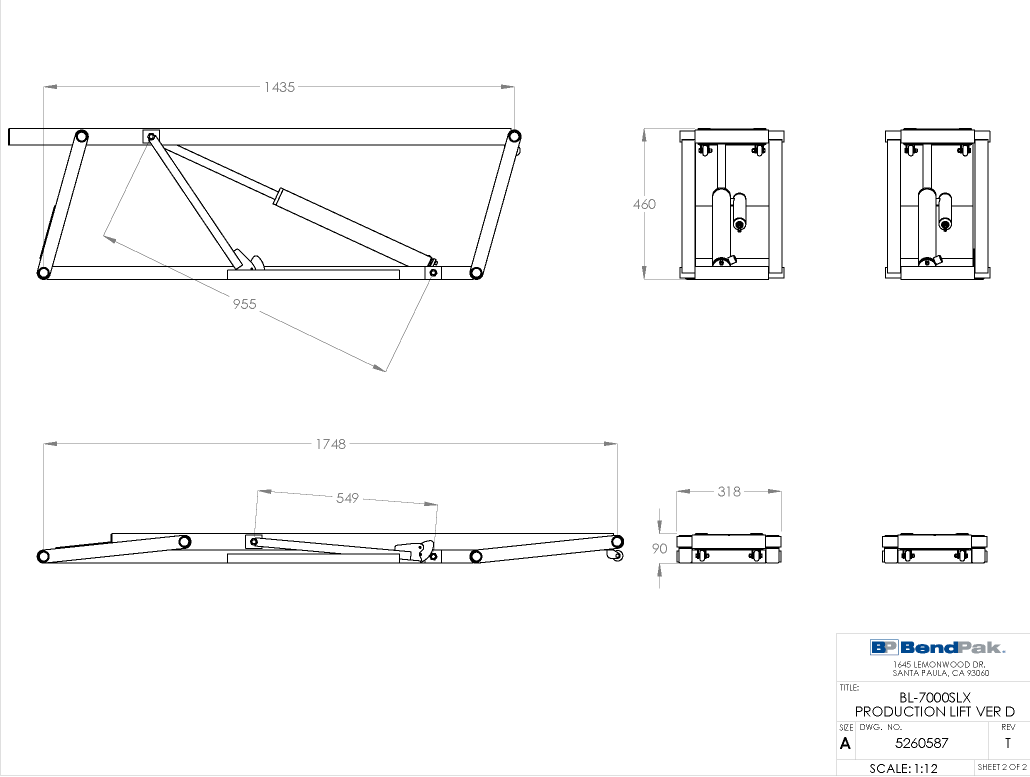
1435
955
460
1748
549
318
90
BendPak.
1645 LEMONWOOD DR.
SANTA PAULA, CA 93060
TITLE:
BL-7000SLX
PRODUCTION LIFT VER D
SIZE
A
DWG. NO.
5260587
REV
T
SCALE: 1:12
SHEET 2 OF 2

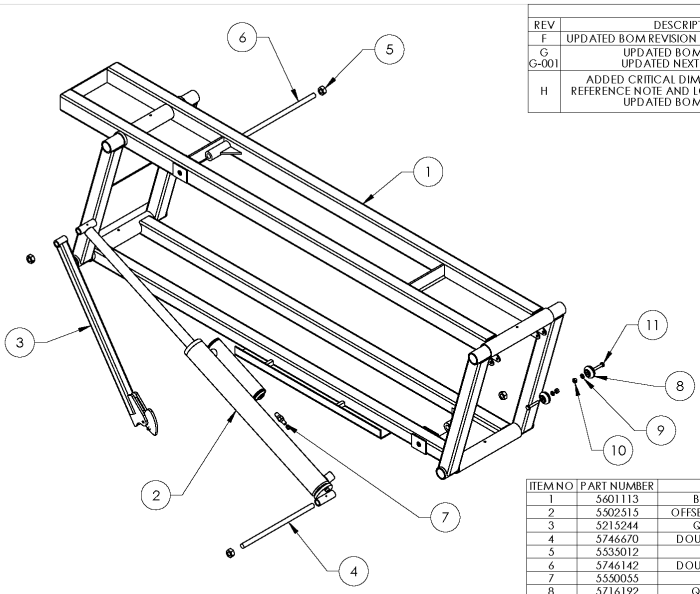

REVISION				
REV	DESCRIPTION	DATE	EDITED BY	ECO#
F	UPDATED BOM REVISION AND NEXT ASSEMBLY	06/20/2018	TM	00962
G G-001	UPDATED BOM REVISION UPDATED NEXT ASSEMBLY	07/31/2018 08/27/2018	TM TM	00976 00991
H	ADDED CRITICAL DIMENSIONS, MODEL REFERENCE NOTE AND LOCK HEIGHTS (pg2), UPDATED BOM REVISION	09/11/2019	TM	01126

ITEM NO	PART NUMBER	DESCRIPTION	QTY	REV
1	5601113	BL-7000SLX FRAME WELDMENT, L.H.	1	C
2	5502515	OFFSET CYLINDER ASSEMBLY Ø1.75 x 16.100	1	J
3	5215244	QUICKJACK SAFETY BAR ASSEMBLY	1	C
4	5746670	DOUBLE THREADED ROD M12 x 1.75 x 254	1	G
5	5535012	NUT M12x1.75 NL	4	-
6	5746142	DOUBLE THREADED ROD M12 x 1.75 x 274	1	D
7	5550055	FTG NPL -02 STM x -02 NPT	1	-
8	5716192	QUICKJACK POLYURETHANE WHEEL	2	E
9	5545026	WASHER M6 x Ø12 SL	2	-
10	5535357	NUT M6 x 1.0 NL	2	-
11	5530027	HHB M6 x 1.0 x 35	2	-

WHERE USED
BL-7000SLX

NOTE: UNLESS OTHERWISE SPECIFIED.
1. REFER TO MODEL FOR ADDITIONAL INFORMATION
2. SEE SHIPPING INSTRUCTIONS FOR FINAL PACKAGING
3. ASSEMBLE ITEMS AS SHOWN

NEXT ASSEMBLY
5215769
5260587

DO NOT SCALE DRAWING

	NAME	DATE
DRAWN	TM	10/27/2016
CHECKED	O	1/14/2020

DIMENSIONS ARE IN MM

THIRD ANGLE PROJECTION

BendPak.
1645 LEMONWOOD DR.
SANTA PAULA, CA 93060

TITLE: BL-7000SLX FRAME ASSEMBLY, L.H.

SIZE A | DWG. NO. 5215477 | REV H

SCALE: 1:10 | SHEET 1 OF 2

PROPRIETARY AND CONFIDENTIAL
THE INFORMATION CONTAINED IN THIS DRAWING IS THE SOLE PROPERTY OF BENDPAK INC. ANY REPRODUCTION IN PART OR AS A WHOLE WITHOUT THE WRITTEN PERMISSION OF BENDPAK INC. IS PROHIBITED.

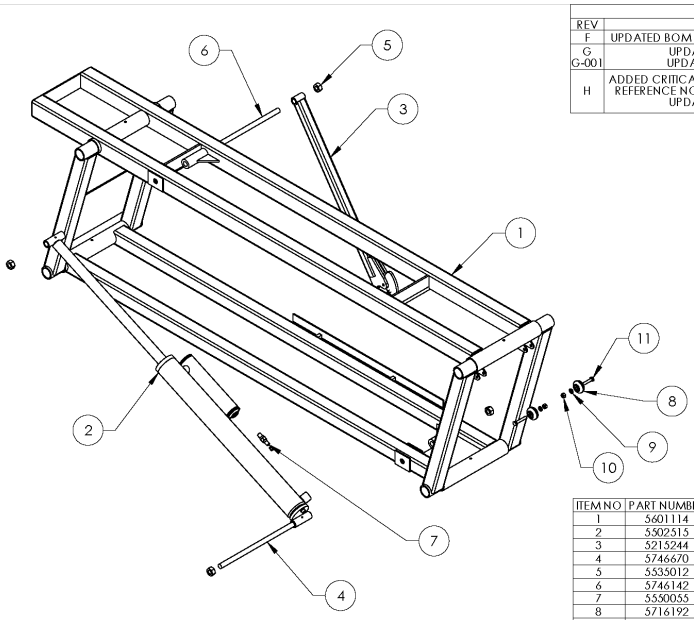

REVISION				
REV	DESCRIPTION	DATE	EDITED BY	ECO#
F	UPDATED BOM REVISION AND NEXT ASSEMBLY	06/20/2018	TM	00962
G G-001	UPDATED BOM REVISION UPDATED NEXT ASSEMBLY	07/31/2018 08/27/2018	TM TM	00976 00991
H	ADDED CRITICAL DIMENSIONS, ADDED MODEL REFERENCE NOTE AND LOCK HEIGHTS (pg2), UPDATED BOM REVISION	09/11/2019	TM	01126

ITEM NO	PART NUMBER	DESCRIPTION	QTY	REV
1	5601114	BL-7000SLX FRAME WELDMENT, R.H.	1	B
2	5502515	OFFSET CYLINDER ASSEMBLY Ø1.75 x 16.100	1	J
3	5215244	QUICKJACK SAFETY BAR ASSEMBLY	1	C
4	5746670	DOUBLE THREADED ROD M12 x 1.75 x 254	1	G
5	5535012	NUT M12x1.75 NL	4	-
6	5746142	DOUBLE THREADED ROD M12 x 1.75 x 274	1	D
7	5550055	FTG NPL -02 STM x -02 NPT	1	-
8	5716192	QUICKJACK POLYURETHANE WHEEL	2	E
9	5545026	WASHER M6 x Ø12 SL	2	-
10	5535357	NUT M6 x 1.0 NL	2	-
11	5530027	HHB M6 x 1.0 x 35	2	-

WHERE USED
BL-7000SLX

NOTE: UNLESS OTHERWISE SPECIFIED.
1. REFER TO MODEL FOR ADDITIONAL INFORMATION
2. SEE SHIPPING INSTRUCTIONS FOR FINAL PACKAGING
3. ASSEMBLE ITEMS AS SHOWN

NEXT ASSEMBLY
5215770
5260587

DO NOT SCALE DRAWING

	NAME	DATE
DRAWN	TM	11/02/2016
CHECKED	O	1/14/2020

DIMENSIONS ARE IN MM

THIRD ANGLE PROJECTION

BendPak.
1645 LEMONWOOD DR.
SANTA PAULA, CA 93060

TITLE: BL-7000SLX FRAME ASSEMBLY, R.H.

SIZE A | DWG. NO. 5215479 | REV H

SCALE: 1:10 | SHEET 1 OF 2

PROPRIETARY AND CONFIDENTIAL
THE INFORMATION CONTAINED IN THIS DRAWING IS THE SOLE PROPERTY OF BENDPAK INC. ANY REPRODUCTION IN PART OR AS A WHOLE WITHOUT THE WRITTEN PERMISSION OF BENDPAK INC. IS PROHIBITED.

REVISION				
REV	DESCRIPTION	DATE	EDITED BY	ECO#
G	UPDATED BOM REVISION	07/23/2018	TS	00976
G-001	UPDATED NEXT ASSEMBLY	09/20/2018	CA	00999
H	UPDATED BOM REVISION	11/19/2018	CA	01029
J	UPDATED BOM REVISION	01/15/2019	TM	01044

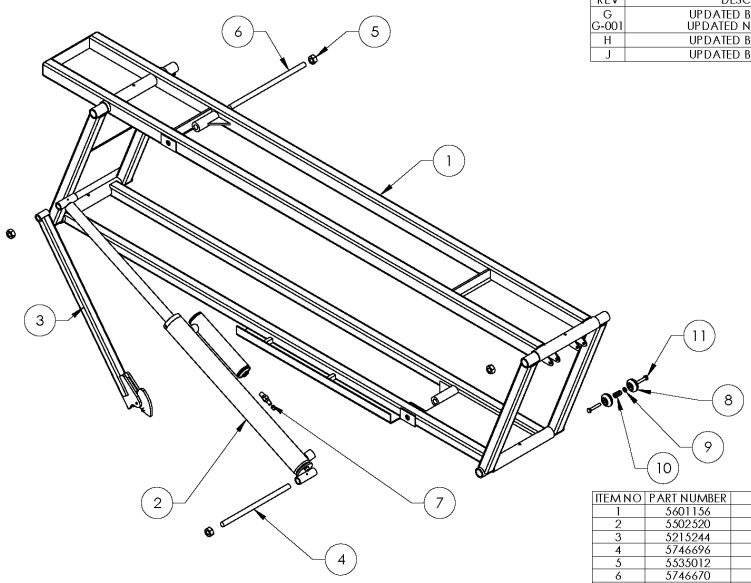

ITEM NO	PART NUMBER	DESCRIPTION	QTY	REV
1	5601156	BL-5000EXT FRAME WELDMENT, L.H.	1	C
2	5502520	OFFSET CYLINDER ASSEMBLY Ø1.5 x 15	1	M
3	5215244	QUICKJACK SAFETY BAR ASSEMBLY	1	C
4	5746696	DOUBLE THREADED ROD M12 x 1.75 x 227	1	E
5	5535012	NUT M12x1.75 NL	4	-
6	5746670	DOUBLE THREADED ROD M12 x 1.75 x 254	1	-
7	5550055	FTG NPL -02 STM x -02 NPT	1	-
8	5716192	QUICKJACK POLYURETHANE WHEEL	2	E
9	5545026	WASHER M6 x Ø12 SL	2	-
10	5535357	NUT M6 x 1.0 NL	2	-
11	5530027	HHB M6 x 1.0 x 35	2	-

WHERE USED
BL-5000EXT

NOTE: UNLESS OTHERWISE SPECIFIED.
1. SEE SHIPPING INSTRUCTIONS FOR FINAL PACKAGING
2. SEE ATTECHED LABEL PLACEMENT SHEET

NEXT ASSEMBLY
5215791
5261002

DO NOT SCALE DRAWING

	NAME	DATE
DRAWN	TM	02/17/2017
CHECKED	CA	01/30/2019

DIMENSIONS ARE IN MM

THIRD ANGLE PROJECTION

BendPak.
1645 LEMONWOOD DR.
SANTA PAULA, CA 93060

TITLE: BL-5000EXT FRAME ASSEMBLY, L.H.

SIZE A | DWG. NO. 5215715 | REV J

SCALE: 1:10 | SHEET 1 OF 1

PROPRIETARY AND CONFIDENTIAL
THE INFORMATION CONTAINED IN THIS DRAWING IS THE SOLE PROPERTY OF BENDPAK INC. ANY REPRODUCTION IN PART OR AS A WHOLE WITHOUT THE WRITTEN PERMISSION OF BENDPAK INC. IS PROHIBITED.

REVISION				
REV	DESCRIPTION	DATE	EDITED BY	ECO#
G	UPDATED BOM REVISION	07/23/2018	TS	00976
G-001	UPDATED NEXT ASSEMBLY	09/20/2018	CA	00999
H	UPDATED BOM REVISION	11/19/2018	CA	01029
J	UPDATED BOM REVISION	01/15/2019	TM	01044

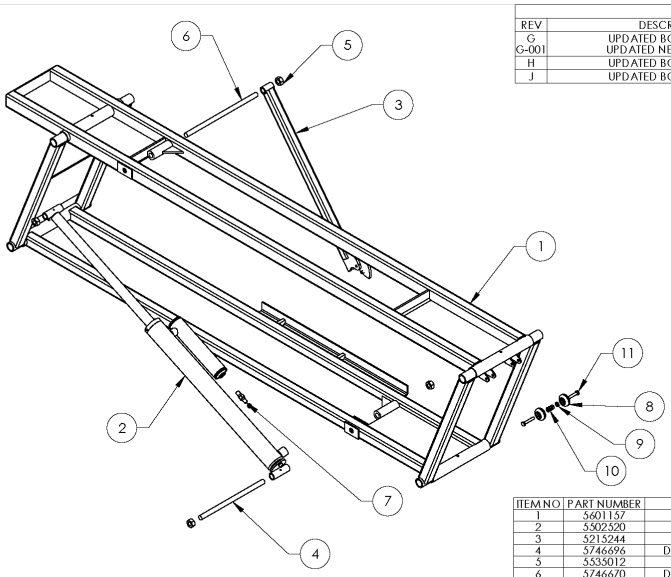

ITEM NO	PART NUMBER	DESCRIPTION	QTY	REV
1	5601157	BL-5000EXT FRAME WELDMENT, R.H.	1	C
2	5502520	OFFSET CYLINDER ASSEMBLY Ø1.5 x 15	1	M
3	5215244	QUICKJACK SAFETY BAR ASSEMBLY	1	C
4	5746696	DOUBLE THREADED ROD M12 x 1.75 x 227	1	E
5	5535012	NUT M12x1.75 NL	4	-
6	5746670	DOUBLE THREADED ROD M12 x 1.75 x 254	1	G
7	5550055	FTG NPL -02 STM x -02 NPT	1	-
8	5716192	QUICKJACK POLYURETHANE WHEEL	2	E
9	5545026	WASHER M6 x Ø12 SL	2	-
10	5535357	NUT M6 x 1.0 NL	2	-
11	5530027	HHB M6 x 1.0 x 35	2	-

WHERE USED
BL-5000EXT

NOTE: UNLESS OTHERWISE SPECIFIED.
1. SEE SHIPPING INSTRUCTIONS FOR FINAL PACKAGING
2. SEE ATTECHED LABEL PLACEMENT SHEET

NEXT ASSEMBLY
5215792
5261002

DO NOT SCALE DRAWING

	NAME	DATE
DRAWN	TM	02/17/2017
CHECKED	CA	01/30/2019

DIMENSIONS ARE IN MM

THIRD ANGLE PROJECTION

BendPak.
1645 LEMONWOOD DR.
SANTA PAULA, CA 93060

TITLE: BL-5000EXT FRAME ASSEMBLY, R.H.

SIZE A | DWG. NO. 5215717 | REV J

SCALE: 1:10 | SHEET 1 OF 1

PROPRIETARY AND CONFIDENTIAL
THE INFORMATION CONTAINED IN THIS DRAWING IS THE SOLE PROPERTY OF BENDPAK INC. ANY REPRODUCTION IN PART OR AS A WHOLE WITHOUT THE WRITTEN PERMISSION OF BENDPAK INC. IS PROHIBITED.

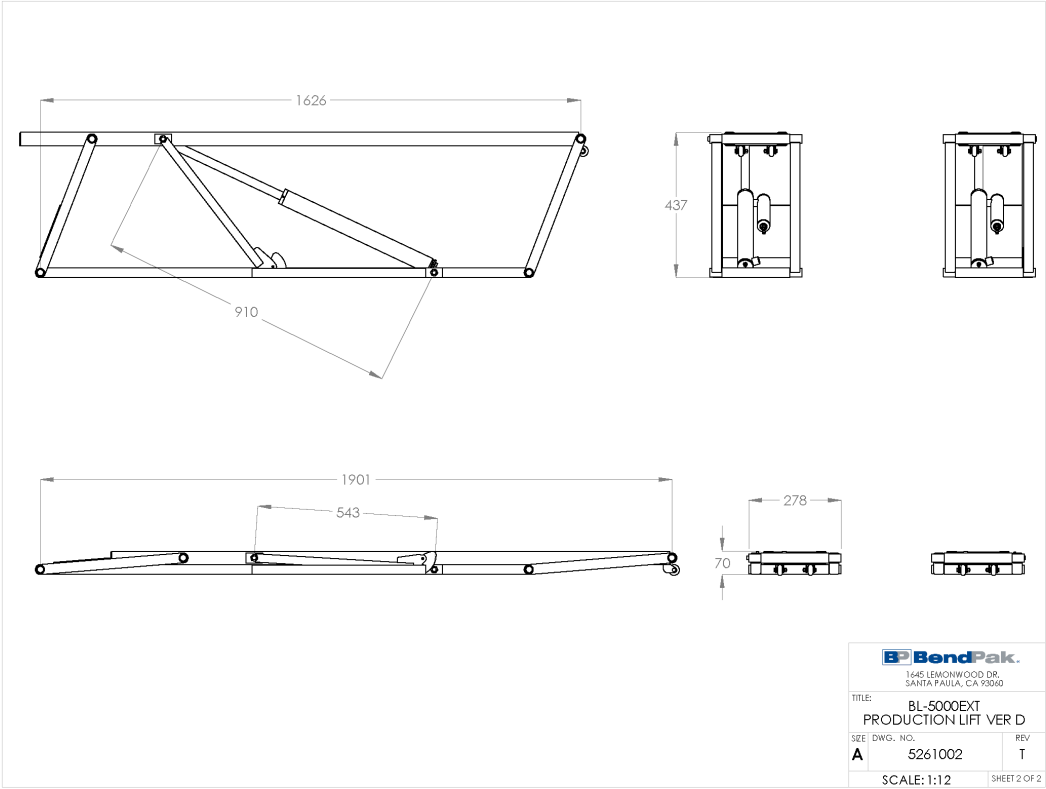
1626
437
910
1901
543
278
70
BendPak.
1645 LEMONWOOD DR.
SANTA PAULA, CA 93060
TITLE:
BL-5000EXT
PRODUCTION LIFT VER D
SIZE
DWG. NO.
REV
A
5261002
T
SCALE: 1:12
SHEET 2 OF 2

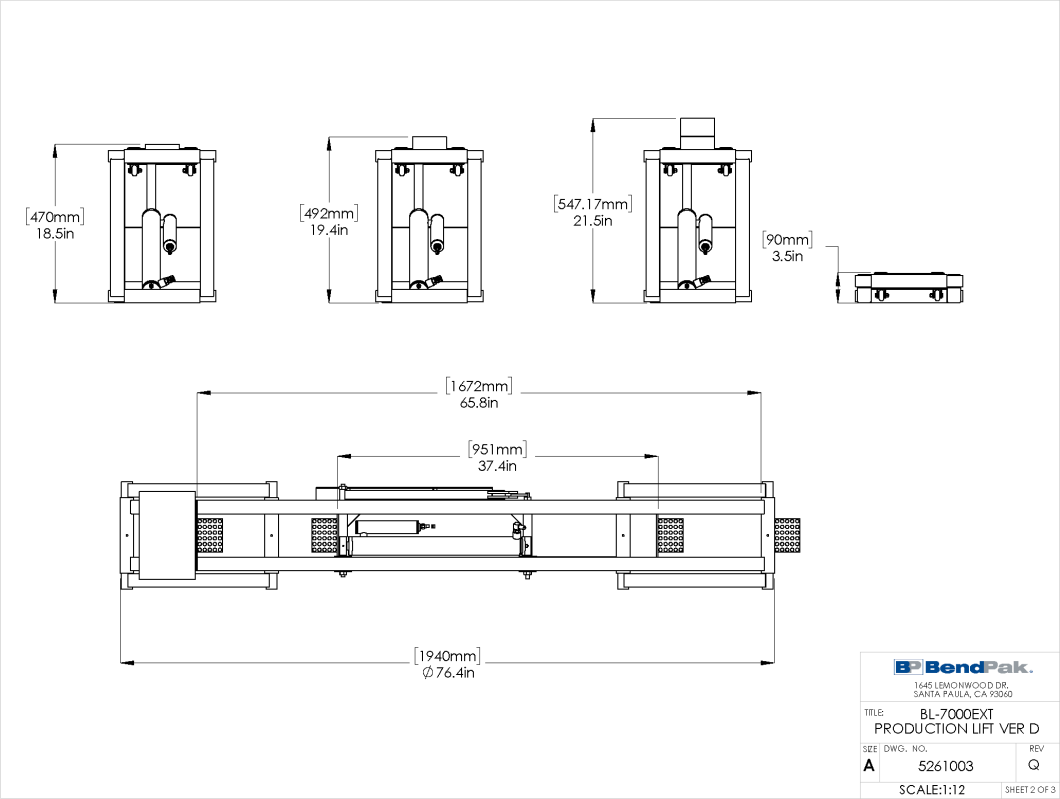
[470mm]
18.5in
[492mm]
19.4in
[547.17mm]
21.5in
[90mm]
3.5in
[1672mm]
65.8in
[951mm]
37.4in
[1940mm]
∅76.4in
BendPak.
1645 LEMONWOOD DR.
SANTA PAULA, CA 93060
TITLE:
BL-7000EXT
PRODUCTION LIFT VER D
SIZE
DWG. NO.
REV
A
5261003
Q
SCALE:1:12
SHEET 2 OF 3

REVISION				
REV	DESCRIPTION	DATE	EDITED BY	ECO#
D	UPDATED BOM REVISIONS	06/20/2018	TM	00962
E E-001	UPDATED BOM REVISION UPDATED NEXT ASSEMBLY	07/31/2018 09/20/2018	TM CA	00976 00999
F	ADDED CRITICAL DIMENSINONS, MODEL REFERENCE NOTE AND LOCK HEIGHTS (pg2), UPDATED BOM REVISION	09/10/2019	TM	01126

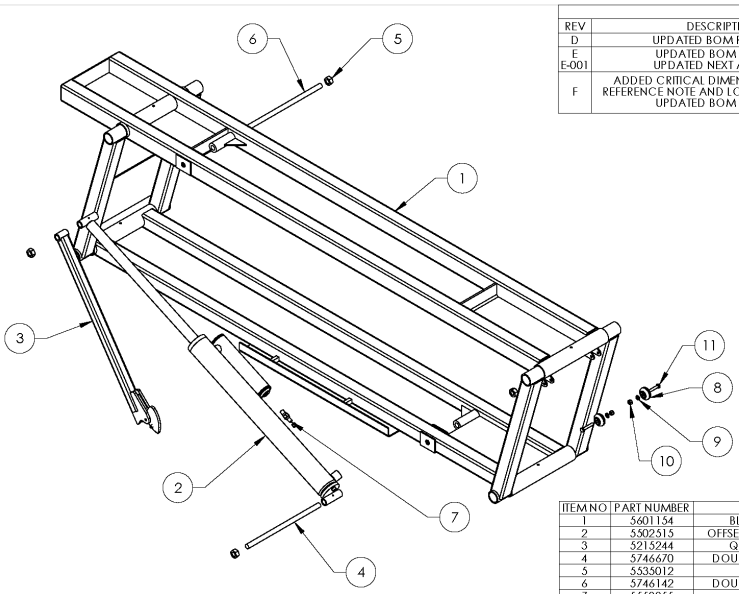

ITEM NO	PART NUMBER	DESCRIPTION	QTY	REV
1	5601154	BL-7000EXT FRAME WELDMENT, L.H.	1	B
2	5502515	OFFSET CYLINDER ASSEMBLY Ø1.75 x 16.100	1	J
3	5215244	QUICKJACK SAFETY BAR ASSEMBLY	1	C
4	5746670	DOUBLE THREADED ROD M12 x 1.75 x 254	1	G
5	5535012	NUT M12x1.75 NL	4	-
6	5746142	DOUBLE THREADED ROD M12 x 1.75 x 274	1	D
7	5550055	FTG NPL -02 STM x -02 NPT	1	-
8	5716192	QUICKJACK POLYURETHANE WHEEL	2	E
9	5545026	WASHER M6 x Ø12 SL	2	-
10	5535357	NUT M6 x 1.0 NL	2	-
11	5530027	HHB M6 x 1.0 x 35	2	-

WHERE USED
BL-7000EXT

NOTE: UNLESS OTHERWISE SPECIFIED.
1. REFER TO MODEL FOR ADDITIONAL INFORMATION
2. SEE SHIPPING INSTRUCTIONS FOR FINAL PACKAGING
3. ASSEMBLE ITEMS AS SHOWN

NEXT ASSEMBLY
5215793
5261003

DO NOT SCALE DRAWING — DIMENSIONS ARE IN MM

	NAME	DATE
DRAWN	TM	02/20/2017
CHECKED	O	1/14/2020

THIRD ANGLE PROJECTION

BendPak.
1645 LEMONWOOD DR.
SANTA PAULA, CA 93060

TITLE: BL-7000EXT FRAME ASSEMBLY, L.H.

SIZE A — DWG. NO. 5215714 — REV F

SCALE: 1:10 — SHEET 1 OF 2

PROPRIETARY AND CONFIDENTIAL
THE INFORMATION CONTAINED IN THIS DRAWING IS THE SOLE PROPERTY OF BENDPAK INC. ANY REPRODUCTION IN PART OR AS A WHOLE WITHOUT THE WRITTEN PERMISSION OF BENDPAK INC. IS PROHIBITED.

REVISION				
REV	DESCRIPTION	DATE	EDITED BY	ECO#
D	UPDATED BOM REVISIONS	06/20/2018	TM	00962
E E-001	UPDATED BOM REVISION UPDATED NEXT ASSEMBLY	07/31/2018 09/20/2018	TM CA	00976 00999
F	ADDED CRITICAL DIMENSINONS, MODEL REFERENCE NOTE AND LOCK HEIGHTS (pg2), UPDATED BOM REVISION	09/11/2019	TM	01126

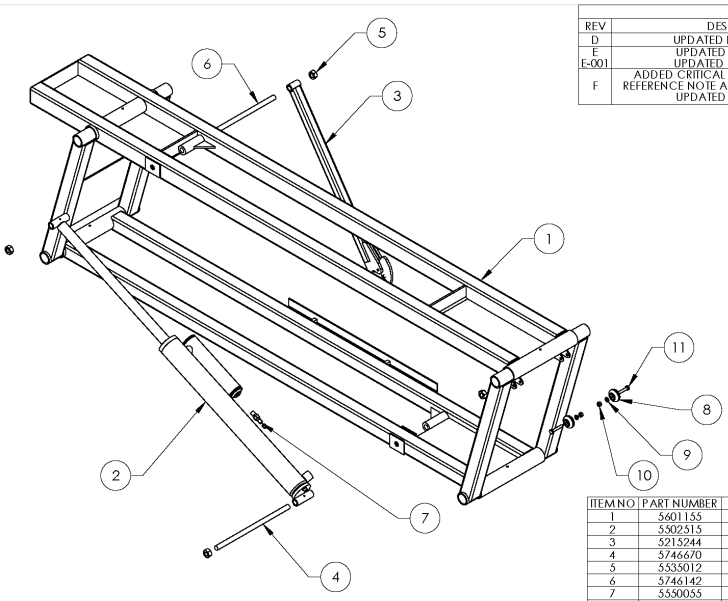

ITEM NO	PART NUMBER	DESCRIPTION	QTY	REV
1	5601155	BL-7000EXT FRAME WELDMENT, R.H.	1	B
2	5502515	OFFSET CYLINDER ASSEMBLY Ø1.75 x 16.100	1	J
3	5215244	QUICKJACK SAFETY BAR ASSEMBLY	1	C
4	5746670	DOUBLE THREADED ROD M12 x 1.75 x 254	1	G
5	5535012	NUT M12x1.75 NL	4	-
6	5746142	DOUBLE THREADED ROD M12 x 1.75 x 274	1	D
7	5550055	FTG NPL -02 STM x -02 NPT	1	-
8	5716192	QUICKJACK POLYURETHANE WHEEL	2	E
9	5545026	WASHER M6 x Ø12 SL	2	-
10	5535357	NUT M6 x 1.0 NL	2	-
11	5530027	HHB M6 x 1.0 x 35	2	-

WHERE USED
BL-7000EXT

NOTE: UNLESS OTHERWISE SPECIFIED.
1. REFER TO MODEL FOR ADDITIONAL INFORMATION
2. SEE SHIPPING INSTRUCTIONS FOR FINAL PACKAGING
3. ASSEMBLE ITEMS AS SHOWN

NEXT ASSEMBLY
5215794
5261003

DO NOT SCALE DRAWING — DIMENSIONS ARE IN MM

	NAME	DATE
DRAWN	TM	02/20/2017
CHECKED	O	1/14/2020

THIRD ANGLE PROJECTION

BendPak.
1645 LEMONWOOD DR.
SANTA PAULA, CA 93060

TITLE: BL-7000EXT FRAME ASSEMBLY, R.H.

SIZE A — DWG. NO. 5215716 — REV F

SCALE: 1:10 — SHEET 1 OF 2

PROPRIETARY AND CONFIDENTIAL
THE INFORMATION CONTAINED IN THIS DRAWING IS THE SOLE PROPERTY OF BENDPAK INC. ANY REPRODUCTION IN PART OR AS A WHOLE WITHOUT THE WRITTEN PERMISSION OF BENDPAK INC. IS PROHIBITED.

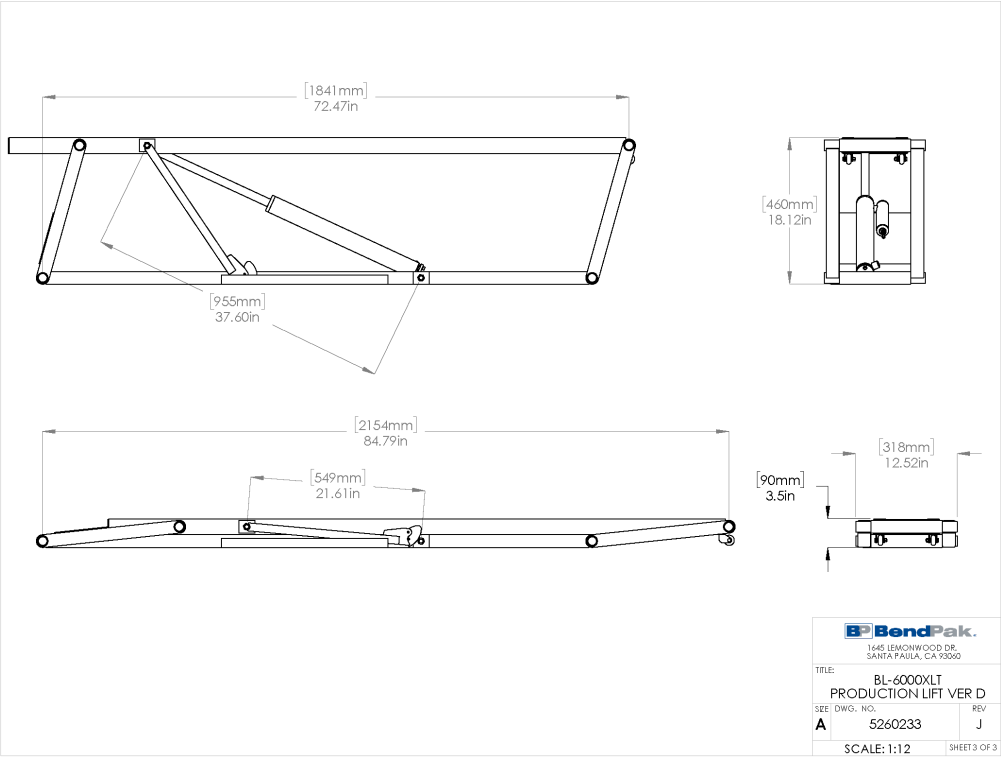
[1841mm]
72.47in
[460mm]
18.12in
[955mm]
37.60in
[2154mm]
84.79in
[549mm]
21.61in
[318mm]
12.52in
[90mm]
3.5in
BendPak.
1645 LEMONWOOD DR.
SANTA PAULA, CA 93060
TITLE:
BL-6000XLT
PRODUCTION LIFT VER D
SIZE
A
DWG. NO.
5260233
REV
J
SCALE: 1:12
SHEET 3 OF 3

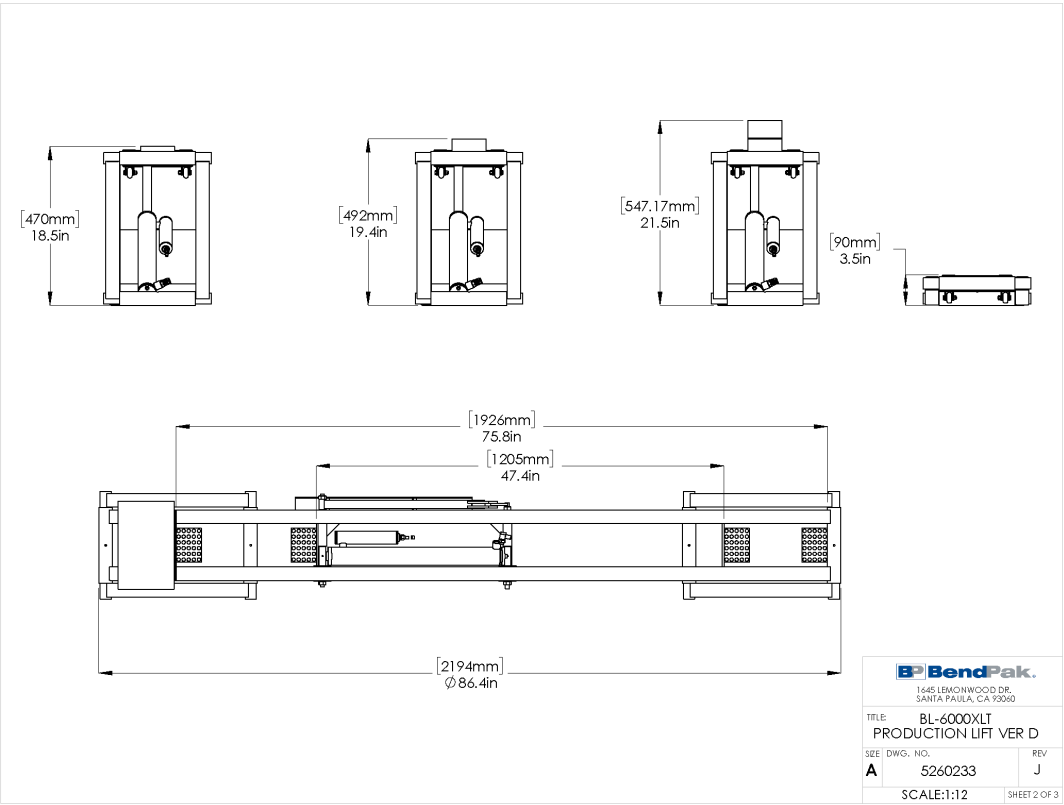
[470mm]
18.5in
[492mm]
19.4in
[547.17mm]
21.5in
[90mm]
3.5in
[1926mm]
75.8in
[1205mm]
47.4in
[2194mm]
∅86.4in
BendPak.
1645 LEMONWOOD DR.
SANTA PAULA, CA 93060
TITLE:
BL-6000XLT
PRODUCTION LIFT VER D
SIZE
A
DWG. NO.
5260233
REV
J
SCALE:1:12
SHEET 2 OF 3

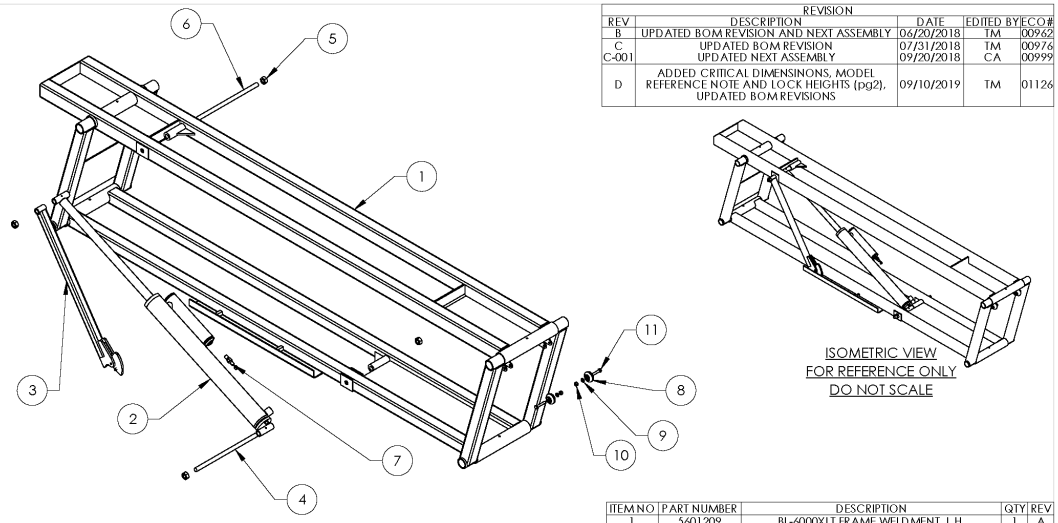

REVISION				
REV	DESCRIPTION	DATE	EDITED BY	ECO#
B	UPDATED BOM REVISION AND NEXT ASSEMBLY	06/20/2018	TM	00962
C	UPDATED BOM REVISION	07/31/2018	TM	00976
C-001	UPDATED NEXT ASSEMBLY	09/20/2018	CA	00999
D	ADDED CRITICAL DIMENSIONS, MODEL REFERENCE NOTE AND LOCK HEIGHTS (pg2), UPDATED BOM REVISIONS	09/10/2019	TM	01126

ITEM NO	PART NUMBER	DESCRIPTION	QTY	REV
1	5601209	BL-6000XLT FRAME WELDMENT, L.H.	1	A
2	5502515	OFFSET CYLINDER ASSEMBLY Ø1.75 x 16.100	1	J
3	5215244	QUICKJACK SAFETY BAR ASSEMBLY	1	C
4	5746670	DOUBLE THREADED ROD M12 x 1.75 x 254	1	G
5	5535012	NUT M12x1.75 NL	4	-
6	5746142	DOUBLE THREADED ROD M12 x 1.75 x 274	1	D
7	5550055	FTG NPL -02 STM x -02 NPT	1	-
8	5716192	QUICKJACK POLYURETHANE WHEEL	2	E
9	5545026	WASHER M6 x Ø12 SL	2	-
10	5535357	NUT M6 x 1.0 NL	2	-
11	5530027	HHB M6 x 1.0 x 35	2	-

WHERE USED
BL-6000XLT

NOTE: UNLESS OTHERWISE SPECIFIED.
1. REFER TO MODEL FOR ADDITIONAL INFORMATION
2. SEE SHIPPING INSTRUCTIONS FOR FINAL PACKAGING
3. ASSEMBLE ITEMS AS SHOWN

NEXT ASSEMBLY
5215795
5260233

DO NOT SCALE DRAWING — DIMENSIONS ARE IN MM

	NAME	DATE
DRAWN	TS	10/02/2017
CHECKED	O	1/14/2020

THIRD ANGLE PROJECTION

BendPak. 1645 LEMONWOOD DR. SANTA PAULA, CA 93060

TITLE: BL-6000XLT FRAME ASSEMBLY, L.H.

SIZE A — DWG. NO. 5215742 — REV D

SCALE: 1:12 — SHEET 1 OF 2

PROPRIETARY AND CONFIDENTIAL
THE INFORMATION CONTAINED IN THIS DRAWING IS THE SOLE PROPERTY OF BENDPAK INC. ANY REPRODUCTION IN PART OR AS A WHOLE WITHOUT THE WRITTEN PERMISSION OF BENDPAK INC. IS PROHIBITED.

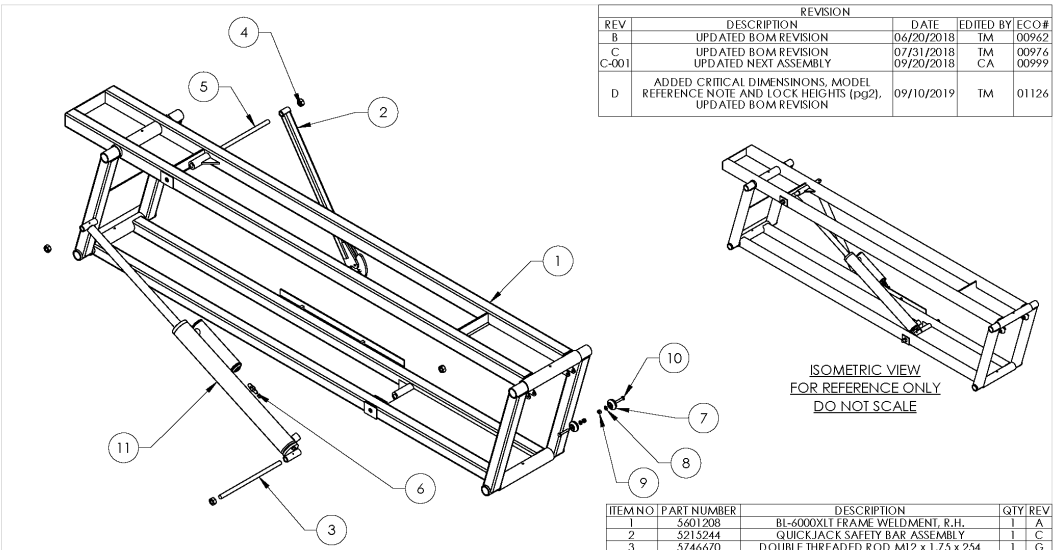

REVISION				
REV	DESCRIPTION	DATE	EDITED BY	ECO#
B	UPDATED BOM REVISION	06/20/2018	TM	00962
C C-001	UPDATED BOM REVISION UPDATED NEXT ASSEMBLY	07/31/2018 09/20/2018	TM CA	00976 00999
D	ADDED CRITICAL DIMENSINONS, MODEL REFERENCE NOTE AND LOCK HEIGHTS (pg2), UPDATED BOM REVISION	09/10/2019	TM	01126

ITEM NO	PART NUMBER	DESCRIPTION	QTY	REV
1	5601208	BL-6000XLT FRAME WELDMENT, R.H.	1	A
2	5215244	QUICKJACK SAFETY BAR ASSEMBLY	1	C
3	5746670	DOUBLE THREADED ROD M12 x 1.75 x 254	1	G
4	5535012	NUT M12x1.75 NL	4	-
5	5746142	DOUBLE THREADED ROD M12 x 1.75 x 274	1	D
6	5550055	FTG NPL -02 STM x -02 NPT	1	-
7	5716192	QUICKJACK POLYURETHANE WHEEL	2	E
8	5545026	WASHER M6 x Ø12 SL	2	-
9	5535357	NUT M6 x 1.0 NL	2	-
10	5530027	HHB M6 x 1.0 x 35	2	-
11	5502515	OFFSET CYLINDER ASSEMBLY Ø1.75 x 16.100	1	J

WHERE USED
BL-6000XLT

NOTE: UNLESS OTHERWISE SPECIFIED.
1. REFER TO MODEL FOR ADDITIONAL INFORMATION
2. SEE SHIPPING INSTRUCTIONS FOR FINAL PACKAGING
3. SEE ATTECHED LABEL PLACEMENT SHEET

NEXT ASSEMBLY
5215796
5260233

DO NOT SCALE DRAWING — DIMENSIONS ARE IN MM

	NAME	DATE
DRAWN	TM	08/11/2017
CHECKED	O	1/14/2020

THIRD ANGLE PROJECTION

BendPak. 1645 LEMONWOOD DR. SANTA PAULA, CA 93060

TITLE: BL-6000XLT FRAME ASSEMBLY, R.H.

SIZE A — DWG. NO. 5215741 — REV D

SCALE: 1:12 — SHEET 1 OF 2

PROPRIETARY AND CONFIDENTIAL
THE INFORMATION CONTAINED IN THIS DRAWING IS THE SOLE PROPERTY OF BENDPAK INC. ANY REPRODUCTION IN PART OR AS A WHOLE WITHOUT THE WRITTEN PERMISSION OF BENDPAK INC. IS PROHIBITED.

CE Documentation

EC Type-Examination Certificate

With the requirements of the Machinery Directive 2006/42/EC
for Annex IV machinery

Certificate No.: CE-GB-20150427-01-5D

Certificate holder:	Bendpak Inc. 1645 E. Lemonwood Drive, Santa Paula, CA, United States of America
Product:	**Quickjack range of short stroke moveable vehicle servicing lifts**
Model(s):	Quickjack dual platform portable scissor vehicle lift Quickjack BL-3500SLX 3500lbs/1588kg capacity Quickjack BL-5000SLX 5000lbs/2268kg capacity Quickjack BL-5000EXT 5000lbs/2268kg capacity Quickjack BL-7000SLX 7000lbs/3175kg capacity Quickjack BL-7000EXT 7000lbs/3175kg capacity SLX models standard frame, EXT models extended frame 12VDC and 230VAC hydraulic powerpack
Standard(s):	EN ISO 12100:2010 Safety of machinery - General principles for design - Risk assessment and risk reduction EN 1493:2010 Vehicle lifts EN 60204-1:2006/AC:2010 Safety of machinery - Electrical equipment of machines - Part 1: General requirements
Issue date:	2020-08-18
Valid until:	2025-08-18

The technical file, accompanying documentation and the equipment which they describe have been found to be in compliance with the requirements of the Machinery Directive 2006/42/EC.
The responsible person defined above has responsibility for ensuring that all future serial manufacture of the machinery conforms to the sample submitted for EC type-examination referenced above.
Any changes to the design of the machinery certified here must be advised to CCQS UK Ltd. for re-assessment.
A CE marking should not be fixed to the equipment until the requirements of all relevant directives have been met.

Approved by UK Government as a Notified Body for CE Marking No.1105

UKAS INSPECTION
6038

Approved by:

Owen Bian – Office Manager

CCQS UK Ltd.
5 Harbour Exchange Square London, E14 9GE, United Kingdom
Tel: +44 (0) 20 7868 1509 Website: www.ccqs.co.uk E-mail: info@ccqs.co.uk
If in any doubt about the integrity of this certificate, please contact CCQS by email to verify.

Page 1 of 1
(Fm210-017, Rev.11)

Declaration of Conformity

The equipment which accompanies this declaration is in conformity with EU Directive:
2006/42/EC Machinery Directive

Manufacturer
BendPak Inc.
1645 Lemonwood Dr
Santa Paula Ca, 93060
USA

A copy of the Technical file for this equipment is available from:
CCQS UK Ltd., Level 7, Westgate House, Westgate Rd., London W5 1YY UK

Certificate No.:
CE-GB-20150427-01-5D

Description of Equipment
Quickjack dual platform portable scissor vehicle lift
BL-3500SLX 1588 kg (3500 lb) capacity serial numbers 06581-00001-00000 to 99999-99999-99999
BL-5000SLX 2268 kg (5000 lb) capacity serial numbers 06581-00001-00000 to 99999-99999-99999
BL-7000SLX 3175 kg (7000 lb) capacity serial numbers 06581-00001-00000 to 99999-99999-99999

A sample of this machinery has been presented to Notified Body number 1105.
CCQS UK Ltd., Level 7, Westgate House, Westgate Rd., London W5 1YY UK
Who have issued an EC type-examination certificate number CE-GB-20150427-01-5A dated 2015.12.10.
The equipment in respect of which this declaration is made conforms to the example to which that certificate relates, and that certificate remains valid.

This declaration of conformity is issued under the sole responsibility of the manufacturer.

The following harmonised standards have been used:-
EN1493:2010 Vehicle Lifts

Authorised signatory of manufacturer

Signature:

Name of signatory: Jeffrey S. Kritzer

Position in company: Executive Vice President
Place signed: Santa Paula, CA, USA
Date signed: October 25, 2021

Automotive Lift Institute (ALI) Store

You probably checked the **ALI's Directory of Certified Lifts** (www.autolift.org/ali-directory-of-certified-lifts/) before making your most recent Lift purchase, but did you know the **ALI Store** (**www.autolift.org/ali-store/**) offers a wide variety of professional, easy-to-use, and reasonably priced training and safety materials that will make your garage a safer place to work?

The ALI Store is your trusted source for workplace safety!

Lifting It Right Online Certificate Course. Make *sure* you and your people are lifting vehicles the right way.

ALI Lift Inspector Certification Program Registration. Become an ALI Certified Lift Inspector.

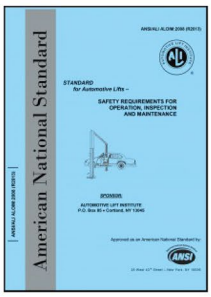

ANSI/ALI ALOIM Standard for Automotive Lifts. Safety Requirements for Operation, Inspection, and Maintenance.

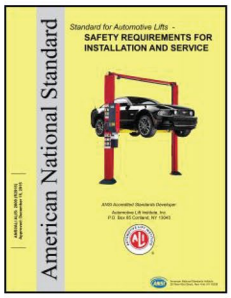

ANSI/ALI ALIS Standard. Safety Requirements for Installation and Service.

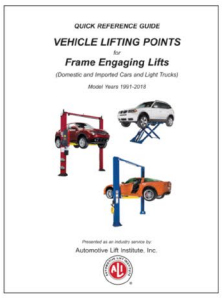

Guide to Hitting Vehicle Lifting Points for Frame-Engaging Lifts. Don't eyeball your lifting points, ***know*** where they are.

Lift Operator Safety Materials. Five safety documents in a single package.

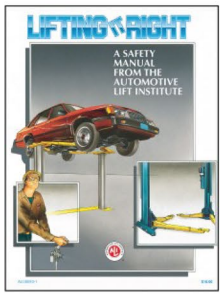

Lifting It Right. A hardcopy version of the *Lifting It Right* safety manual from the Automotive Lift Institute.

Uniform Warning Labels and Placards for 2-Posts. Labels in Mandarin, French Canadian, and Spanish are also available.

Safety Tips Card. Reminds your people of 13 key safety tips to follow daily.

Visit today and get the training and materials you need to work safely:
http://www.autolift.org/ali-store/.

1645 Lemonwood Drive
Santa Paula, CA, 93060 USA

© 2021 BendPak Inc. All rights reserved.

bendpak.com