Nokia 5228 User Guide

Issue 1.3

DECLARATION OF CONFORMITY

CE 0434 Hereby, NOKIA CORPORATION declares that this RM-625 product is in compliance with the essential requirements and other relevant provisions of Directive 1999/5/EC. A copy of the Declaration of Conformity can be found at http://www.nokia.com/phones/declaration_of_conformity/.

© 2010 Nokia. All rights reserved.

Nokia, Nokia Connecting People, Nokia Care, and Ovi are trademarks or registered trademarks of Nokia Corporation. Nokia tune is a sound mark of Nokia Corporation. Other product and company names mentioned herein may be trademarks or tradenames of their respective owners.

Reproduction, transfer, distribution, or storage of part or all of the contents in this document in any form without the prior written permission of Nokia is prohibited. Nokia operates a policy of continuous development. Nokia reserves the right to make changes and improvements to any of the products described in this document without prior notice.

symbian This product includes software licensed from Symbian Software Ltd ©1998-2009. Symbian and Symbian OS are trademarks of Symbian Ltd.

Java POWERED Java and all Java-based marks are trademarks or registered trademarks of Sun Microsystems, Inc.

This product is licensed under the MPEG-4 Visual Patent Portfolio License (i) for personal and noncommercial use in connection with information which has been encoded in compliance with the MPEG-4 Visual Standard by a consumer engaged in a personal and noncommercial activity and (ii) for use in connection with MPEG-4 video provided by a licensed video provider. No license is granted or shall be implied for any other use. Additional information, including that related to promotional, internal, and commercial uses, may be obtained from MPEG LA, LLC. See http://www.mpegla.com.

TO THE MAXIMUM EXTENT PERMITTED BY APPLICABLE LAW, UNDER NO CIRCUMSTANCES SHALL NOKIA OR ANY OF ITS LICENSORS BE RESPONSIBLE FOR ANY LOSS OF DATA OR INCOME OR ANY SPECIAL, INCIDENTAL, CONSEQUENTIAL OR INDIRECT DAMAGES HOWSOEVER CAUSED.

THE CONTENTS OF THIS DOCUMENT ARE PROVIDED "AS IS". EXCEPT AS REQUIRED BY APPLICABLE LAW, NO WARRANTIES OF ANY KIND, EITHER EXPRESS OR IMPLIED, INCLUDING, BUT NOT LIMITED TO, THE IMPLIED WARRANTIES OF MERCHANTABILITY AND FITNESS FOR A PARTICULAR PURPOSE, ARE MADE IN RELATION TO THE ACCURACY, RELIABILITY

OR CONTENTS OF THIS DOCUMENT. NOKIA RESERVES THE RIGHT TO REVISE THIS DOCUMENT OR WITHDRAW IT AT ANY TIME WITHOUT PRIOR NOTICE.

Reverse engineering of software in the device is prohibited to the extent permitted by applicable law. Insofar as this user guide contains any limitations on Nokia's representations, warranties, damages and liabilities, such limitations shall likewise limit any representations, warranties, damages and liabilities of Nokia's licensors. The availability of particular products and applications and services for these products may vary by region. Please check with your Nokia dealer for details and availability of language options. This device may contain commodities, technology or software subject to export laws and regulations from the US and other countries. Diversion contrary to law is prohibited.

FCC/INDUSTRY CANADA NOTICE
Your device may cause TV or radio interference (for example, when using a telephone in close proximity to receiving equipment). The FCC or Industry Canada can require you to stop using your telephone if such interference cannot be eliminated. If you require assistance, contact your local service facility. This device complies with part 15 of the FCC rules. Operation is subject to the following two conditions: (1) This device may not cause harmful interference, and (2) this device must accept any interference received, including interference that may cause undesired operation. Any changes or modifications not expressly approved by Nokia could void the user's authority to operate this equipment.

Some operations and features are SIM card and/or network dependent, MMS dependent, or dependent on the compatibility of devices and the content formats supported. Some services are subject to a separate charge.

Your device may have preinstalled bookmarks and links for third-party internet sites. You may also access other third-party sites through your device. Third-party sites are not affiliated with Nokia, and Nokia does not endorse or assume liability for them. If you choose to access such sites, you should take precautions for security or content.

/Issue 1.3 EN

Contents

Safety.....7
About your device.....8
Network services.....9

1. Find help.....10
In-device help.....10
Support.....10
Update software using your PC.....11
Settings.....11
Access codes.....11
Prolong battery life.....12
Free memory.....13

2. Get started.....13
Insert the SIM card.....13
Insert the battery.....15
Insert the memory card.....16
Charge the battery.....17
Keys and parts.....18
Switch the device on.....20
Lock the keys and touch screen.....20
Home screen.....20
Access the menu.....21
Touch screen actions.....21
Media key.....24
Change the ringing tone.....24
Nokia support.....24

3. Your device.....25
Phone setup.....25
Transfer content.....25
Display indicators.....26
Contacts bar.....27
Antenna locations.....28
Offline profile.....28
Shortcuts.....29
Volume and loudspeaker control.....29
Sensor settings and display rotation.....30
Remote lock.....30
Headset.....31
Attach a wrist strap.....31
Remove the SIM card.....32
Remove the memory card.....32

4. Make calls.....33
Touch screen during calls.....33
Calls 33
During a call.....34
Voice mailbox 34
Answer or reject a call.....35
Make a conference call.....35
Speed dial a phone number.....36
Call waiting.....36
Voice dialling.....36
Log 37

5. Write text.....39
Virtual keyboard.....39
Handwriting.....40
Alphanumeric keypad.....41
Touch input settings.....44

6. Contacts.....44
Save and edit names and numbers.....45
Contacts toolbar.....45
Manage names and numbers.....45
Default numbers and addresses.....46
Ringing tones, images, and call text for contacts.....46
Copy contacts.....47
SIM services.....47

7. Messaging.....48
Messaging main view.....48
Write and send messages.....49
Messaging inbox.....50
Set up e-mail.....52
Nokia Messaging.....52
Mailbox.....53
Mail for Exchange.....55
View messages on a SIM card.....56
Cell broadcast messages.....56
Service commands.....56
Messaging settings.....57
Contacts on Ovi.....59

8. Personalise your device.....67
Change the look of your device.....67
Profiles.....68

9. Music folder.....68
Music player.....68
Ovi Music.....72
Nokia Podcasting.....73
Radio.....75

10. Camera.....76
Activate the camera.....76
Image capture.....76
Video recording.....81

11. Gallery.....82
View and organise files.....82
View images and videos.....83
Organise images and videos.....84

12. Nokia Video Centre.....84
View and download video clips.....84
Video feeds.....86
My videos.....86
Transfer videos from your PC.....87
Video centre settings.....87

13. Web browser.....88
Browse the web.....88
Browser toolbar.....89
Navigate pages.....90
Web feeds and blogs.....90
Widgets.....90
Content search.....91
Bookmarks.....91
Empty the cache.....91
Connection security.....92

14. Connectivity.....93
Data connections and access points.....93

Network settings.....93
Access points.....94
Active data connections.....96
Synchronisation.....96
Bluetooth connectivity.....97
USB.....102
PC connections.....102
Administrative settings.....102

15. Search.....103
About Search.....103
Start a search.....103

16. About Ovi Store.....104

17. Other applications.....104
Clock.....104
Calendar.....105
File manager.....106
Application manager.....107
RealPlayer 110
Recorder.....112
Write notes.....112
Make calculations.....112
Converter.....113
Dictionary.....113

18. Settings.....113
Phone settings.....113
Call settings.....120

19. Troubleshooting.....122

20. Green tips.....125
Save energy.....125
Recycle.....125
Save paper.....125
Learn more.....126

Product and safety information.....126

Index.....135

Safety

Read these simple guidelines. Not following them may be dangerous or illegal. Read the complete user guide for further information.

SWITCH ON SAFELY

Do not switch the device on when wireless phone use is prohibited or when it may cause interference or danger.

ROAD SAFETY COMES FIRST

Obey all local laws. Always keep your hands free to operate the vehicle while driving. Your first consideration while driving should be road safety.

INTERFERENCE

All wireless devices may be susceptible to interference, which could affect performance.

SWITCH OFF IN RESTRICTED AREAS

Follow any restrictions. Switch the device off in aircraft, near medical equipment, fuel, chemicals, or blasting areas.

QUALIFIED SERVICE

Only qualified personnel may install or repair this product.

ACCESSORIES AND BATTERIES

Use only approved accessories and batteries. Do not connect incompatible products.

WATER-RESISTANCE

Your device is not water-resistant. Keep it dry.

© 2010 Nokia. All rights reserved.

About your device

The wireless device described in this guide is approved for use on the GSM/EDGE 850/900/1800/1900 MHz networks. Contact your service provider for more information about networks.

Your device supports several connectivity methods and like computers may be exposed to viruses and other harmful content. Exercise caution with messages, connectivity requests, browsing, and downloads. Only install and use services and software from trustworthy sources that offer adequate security and protection, such as applications that are Symbian Signed or have passed the Java Verified™ testing. Consider installing antivirus and other security software on your device and any connected computer.

Your device may have preinstalled bookmarks and links for third-party internet sites and may allow you to access third-party sites. These are not affiliated with Nokia, and Nokia does not endorse or assume liability for them. If you access such sites, take precautions for security or content.

Warning: To use any features in this device, other than the alarm clock, the device must be switched on. Do not switch the device on when wireless device use may cause interference or danger.

When using this device, obey all laws and respect local customs, privacy and legitimate rights of others, including copyrights. Copyright protection may prevent some images, music, and other content from being copied, modified, or transferred.

Make back-up copies or keep a written record of all important information stored in your device.

When connecting to any other device, read its user guide for detailed safety instructions. Do not connect incompatible products.

The images in this guide may differ from your device display.

Refer to the user guide for other important information about your device.

 © 2010 Nokia. All rights reserved.

Network services

To use the device you must have service from a wireless service provider. Some features are not available on all networks; other features may require that you make specific arrangements with your service provider to use them. Network services involve transmission of data. Check with your service provider for details about fees in your home network and when roaming on other networks. Your service provider can explain what charges will apply. Some networks may have limitations that affect how you can use some features of this device requiring network support such as support for specific technologies like WAP 2.0 protocols (HTTP and SSL) that run on TCP/IP protocols and language-dependent characters.

Your service provider may have requested that certain features be disabled or not activated in your device. If so, these features will not appear on your device menu. Your device may also have customized items such as menu names, menu order, and icons.

© 2010 Nokia. All rights reserved.

1. Find help

In-device help

Your device contains instructions to help to use the applications in your device.

To open help texts from the main menu, select **Menu** > **Help** and the application for which you want to read instructions.

When an application is open, to access the help text for the current view, select **Options** > **Help**.

When you are reading the instructions, to change the size of the help text, select **Options** > **Decrease font size** or **Increase font size**.

You may find links to related topics at the end of the help text. If you select an underlined word, a short explanation is displayed. Help texts use the following indicators: Link to a related help topic. Link to the application being discussed.

When you are reading the instructions, to switch between help texts and the application that is open in the background, select **Options** > **Show open apps.** and the desired application.

Support

When you want to learn more about how to use your product or you are unsure how your device should function, see the support pages at www.nokia.com/support or your local Nokia website, www.nokia.mobi/support (with a mobile device), the Help application in the device, or the user guide.

If this does not resolve your issue, do one of the following:

- Restart the device: switch off the device, and remove the battery. After about a minute, replace the battery, and switch on the device.
- Restore the original factory settings as explained in the user guide. Your documents and files will be deleted in the reset, so back up your data first.
- Update your device software regularly for optimum performance and possible new features, as explained in the user guide.

© 2010 Nokia. All rights reserved.

If your issue remains unsolved, contact Nokia for repair options. See www.nokia.com/repair. Before sending your device for repair, always back up the data in your device.

Update software using your PC

Nokia Software Updater is a PC application that enables you to update your device software. To update your device software, you need a compatible PC, broadband internet access, and a compatible USB data cable to connect your device to the PC.

To get more information and to download the Nokia Software Updater application, go to www.nokia.com/softwareupdate.

Settings

Your device normally has MMS, GPRS, streaming, and mobile internet settings automatically configured in the device, based on your network service provider information. You may have settings from your service providers already installed in your device, or you may receive or request the settings from the network service providers as a special message.

Access codes

If you forget any of the access codes, contact your service provider.

- Personal identification number (PIN) code — This code protects your SIM card against unauthorised use. The PIN code (4 - 8 digits) is usually supplied with the SIM card. After three consecutive incorrect PIN code entries, the code is blocked, and you need the PUK code to unblock it.
- PIN2 code — This code (4 - 8 digits) is supplied with some SIM cards, and is required to access some functions in your device.
- Lock code (also known as security code) — The lock code helps you to protect your device against unauthorised use. The preset code is 12345. You can create and change the code, and set the device to request the code. Keep the new code secret and in a safe place separate from your device. If you forget the code and your device is locked, your device will require service. Additional charges may

© 2010 Nokia. All rights reserved.

apply, and all the personal data in your device may be deleted. For more information, contact a Nokia Care point or your device dealer.

- Personal Unblocking Key (PUK) code and PUK2 code — These codes (8 digits) are required to change a blocked PIN code or PIN2 code, respectively. If the codes are not supplied with the SIM card, contact the network service provider whose SIM card is in your device.
- International Mobile Equipment Identity (IMEI) number — This number (15 or 17 digits) is used to identify valid devices on the GSM network. Devices that are, for example, stolen, can be blocked from accessing the network. The IMEI number for your device can be found under the battery.

Prolong battery life

Many features in your device increase the demand on battery power and reduce the battery lifetime. To save battery power, note the following:

- Features that use Bluetooth coonectivity, or allowing such features to run in the background while using other features, increase the demand on battery power. Deactivate Bluetooth connectivity when you do not need it.
- If you have selected **Packet data connection** > **When available** in the connection settings, and there is no packet data coverage (GPRS), the device periodically tries to establish a packet data connection. To prolong the operating time of your device, select **Packet data connection** > **When needed**.
- If the signal strength of the cellular network varies much in your area, your device must scan for the available network repeatedly. This increases the demand on battery power.
- The backlight of the display increases the demand on battery power. In the display settings, you can adjust the display brightness and change the time-out period after which the backlight is switched off. Select **Menu** > **Settings** and **Phone** > **Display** > **Brightness** or **Light time-out**.
- Leaving applications running in the background increases the demand on battery power. To access the applications you are not using, press and hold the menu key, and select an application.

 © 2010 Nokia. All rights reserved.

Free memory

To view how much space is available for different data types, select **Menu** > **Applications** > **Office** > **File mgr.**.

Many features of the device use memory to store data. The device notifies you if the memory in different memory locations is low.

To free memory, transfer data to a compatible memory card (if available) or to a compatible computer.

To remove data you no longer need, use File manager or open the respective application. You can remove the following:

- Messages in the folders in Messaging and retrieved e-mail messages in the mailbox
- Saved web pages
- Contact information
- Calendar notes
- Applications shown in Application manager that you do not need
- Installation files (.sis or .sisx) of applications you have installed. Transfer the installation files to a compatible computer.
- Images and video clips in Gallery. Back up the files to a compatible computer.

2. Get started

Insert the SIM card

Important: To prevent damage to the SIM card, always remove the battery before you insert or remove the card.

Important: Do not use a mini-UICC SIM card, also known as a micro-SIM card, a micro-SIM card with an adapter, or a SIM card that has a mini-UICC cutout (see

© 2010 Nokia. All rights reserved.

figure) in this device. A micro SIM card is smaller than the standard SIM card. This device does not support the use of micro-SIM cards and use of incompatible SIM cards may damage the card or the device, and may corrupt data stored on the card.

A SIM card may be already inserted in the device. If not, do the following:

1. Open the cover of the SIM card slot.
2. Insert a SIM card in the SIM card slot. Make sure the contact area on the card is facing up and the bevelled corner is facing toward the device. Push the card in.
3. Close the cover of the SIM card slot. Make sure the cover is properly closed.

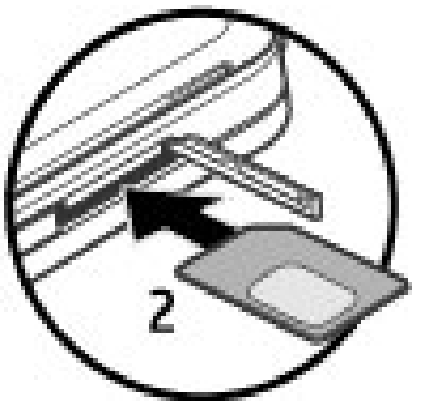

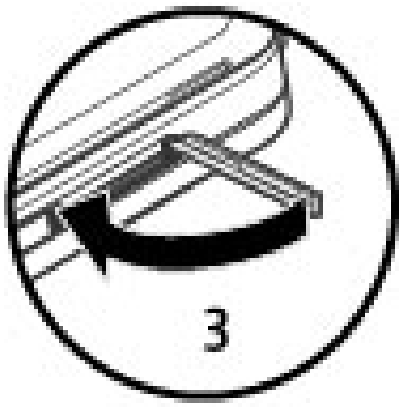

If the SIM card is not properly in place, the device can only be used in the offline profile.

© 2010 Nokia. All rights reserved.

Insert the battery

Always switch the device off and disconnect the charger before removing the battery.

1. Remove the back cover.
2. Insert the battery.
3. To replace the cover, direct the top locking catches toward their slots, and press down until the cover locks into place.

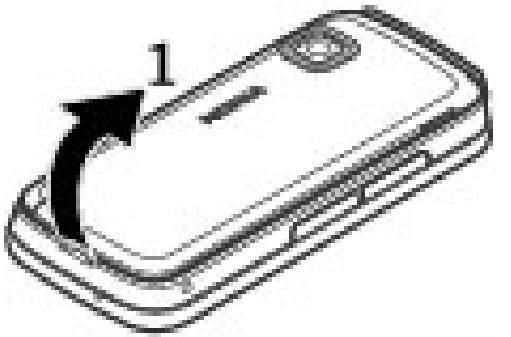

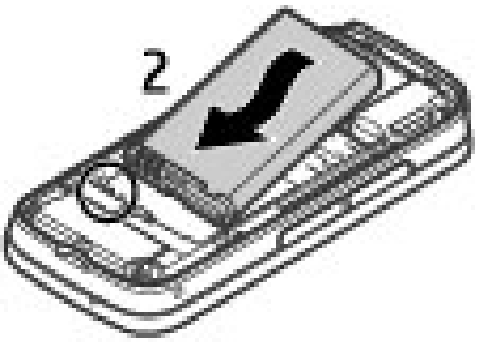

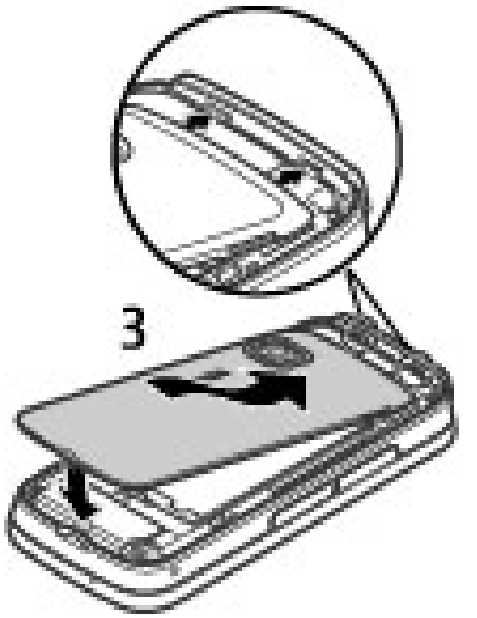

© 2010 Nokia. All rights reserved.

Insert the memory card

Use only compatible microSD and microSDHC cards approved by Nokia for use with this device. Nokia uses approved industry standards for memory cards, but some brands may not be fully compatible with this device. Incompatible cards may damage the card and the device and corrupt data stored on the card.

1. Open the cover of the memory card slot.
2. Insert a compatible memory card in the memory card slot. Make sure the contact area on the card is facing up. Push the card in. You can hear a click when the card locks into place.

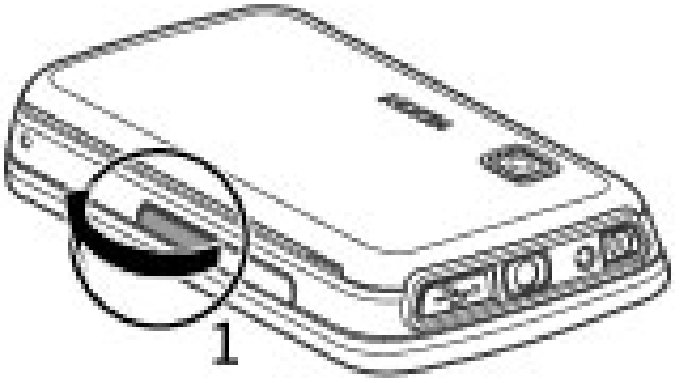

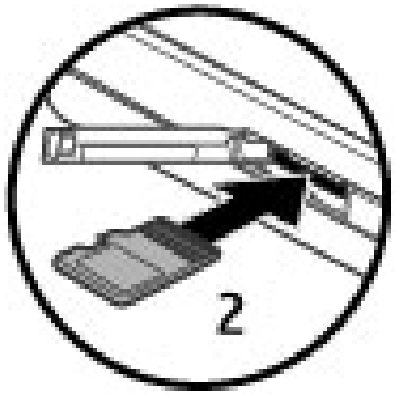

© 2010 Nokia. All rights reserved.

3. Close the cover of the memory card slot. Make sure the cover is properly closed.

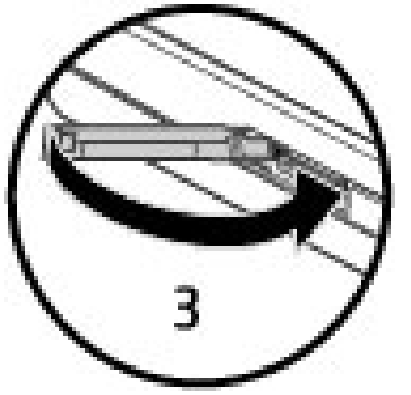

Charge the battery

Your battery has been partially charged at the factory. If the device indicates a low charge, do the following:

1. Connect the charger to a wall outlet.
2. Connect the charger to the device.

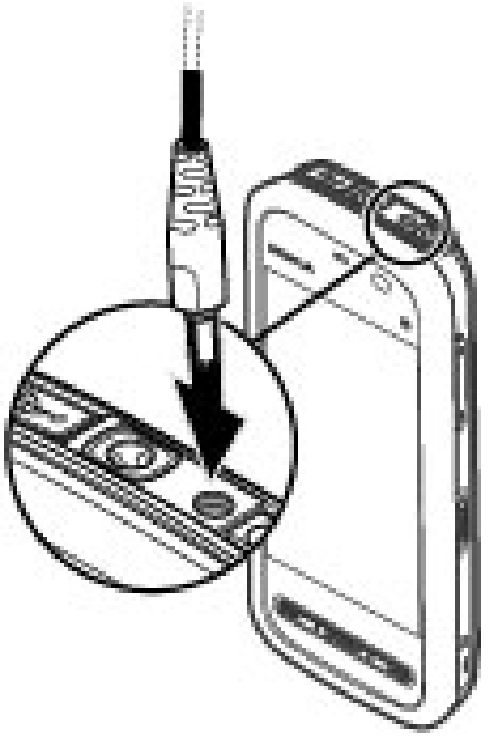

3. When the device indicates a full charge, disconnect the charger from the device, then from the wall outlet.

© 2010 Nokia. All rights reserved.

You do not need to charge the battery for a specific length of time, and you can use the device while it is charging. If the battery is completely discharged, it may take several minutes before the charging indicator appears on the display or before any calls can be made.

Tip: Disconnect the charger from the wall outlet when the charger is not in use. A charger that is connected to the outlet consumes power even when it is not connected to the device.

Keys and parts

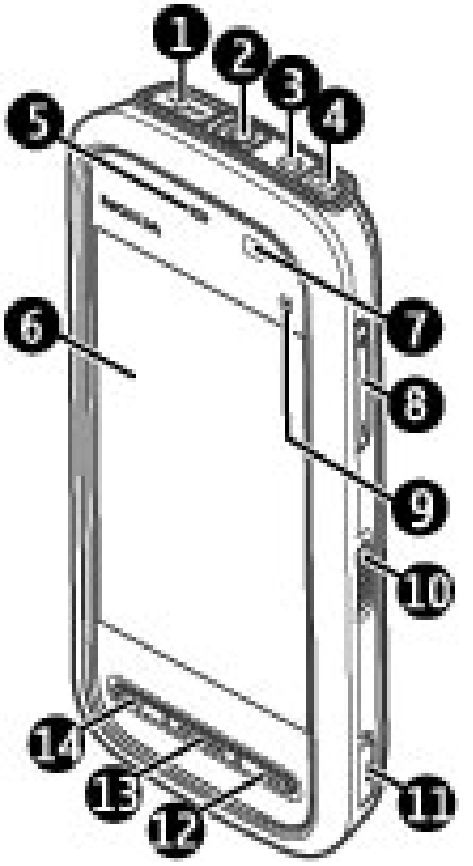

1 — Micro USB connector

2 — Nokia AV connector (3.5mm)

3 — Charger connector

4 — Power key

5 — Earpiece

 © 2010 Nokia. All rights reserved.

6 — Touch screen
7 — Proximity detector
8 — Volume/Zoom key
9 — Media key
10 — Lock switch
11 — Capture key
12 — End key
13 — Menu key
14 — Call key

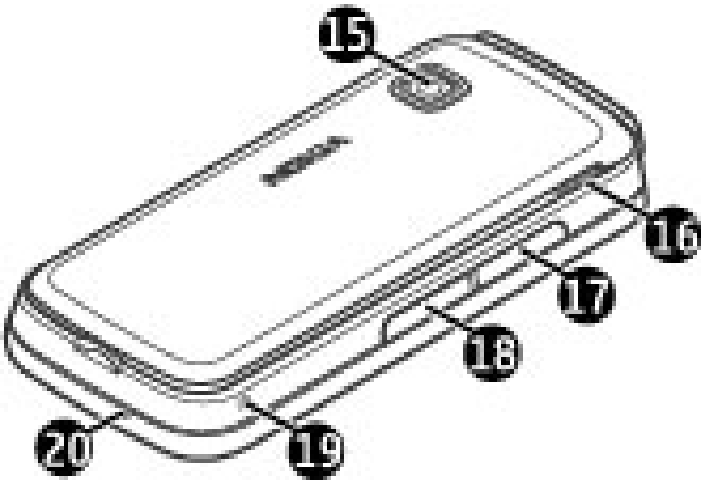

15 — Camera lens
16 — Loudspeaker
17 — SIM card slot
18 — Memory card slot
19 — Wrist strap hole
20 — Microphone

© 2010 Nokia. All rights reserved.

Do not cover the area above the touch screen, for example, with protective film or tape.

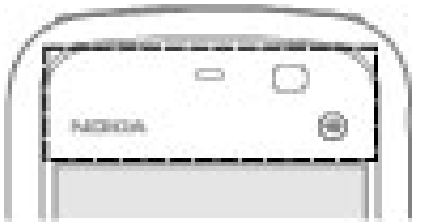

Switch the device on

1. Press and hold the power key.
2. If the device asks for a PIN code or lock code, enter it, and select **OK**. To delete a number, select ←. The factory setting for the lock code is **12345**.
3. Select your location. If you accidentally select the wrong location, select **Back**.
4. Enter the date and time. When using the 12-hour time format, to switch between a.m. and p.m., select any number.

Lock the keys and touch screen

To lock or unlock the touch screen and the keys, slide the lock switch on the side of the device.

When the touch screen and keys are locked, the touch screen is switched off and the keys are inactive.

The screen and keys may be locked automatically after a period of inactivity. To change settings for automatic screen and key locking, select **Menu** > **Settings** and **Phone** > **Phone mgmt.** > **Auto. keyguard** > **Keypad autolock period**.

Home screen

The home screen is your starting point where you can collect all your important contacts or application shortcuts.

 © 2010 Nokia. All rights reserved.

Interactive display elements

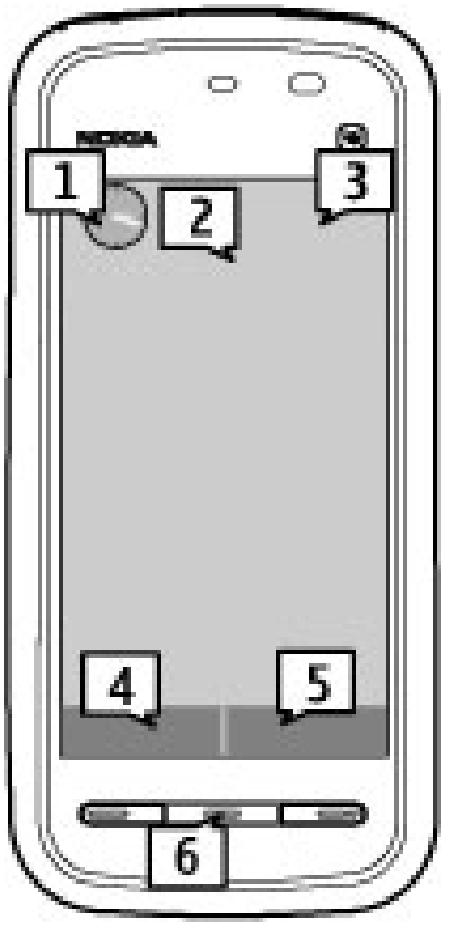

To open the clock application, select the clock (1).

To open the calendar, or to change the profile, select the date or the profile name (2).

To view or modify connectivity settings (⇌), or to view missed events, select the top right corner (3).

To make a phone call, select **Telephone** or ▦ (4).

To open the contacts list, select **Contacts** or ▣ (5).

To open the main menu, press the menu key (6).

Start using the contacts bar — To start using the contacts bar, and to add your contacts to the home screen, select ⊕ > **Options** > **New contact**, and follow the instructions.

Change the home screen theme or shortcuts — Select **Menu** > **Settings** and **Personal** > **Home screen**.

Music keys — When music or the radio is playing in the background, music keys (play/pause, skip backward, and skip forward) are displayed in the home screen.

Access the menu

To access the menu, press the menu key.

To open an application or folder in the menu, select the item.

Touch screen actions

Tap and double-tap

To open an application or other element on the touch screen, you normally tap it with your finger or the stylus. However, to open the following items, you must tap them twice.

© 2010 Nokia. All rights reserved.

Important: Use only a stylus approved by Nokia for use with this device. Using any other stylus may invalidate any warranty applying to the device and may damage the touch screen. Avoid scratching the touch screen. Never use an actual pen or pencil or other sharp objects to write on the touch screen.

- List items in an application, such as the Drafts folder in the folder list in Messaging

  Tip: When you open a list view, the first item is already highlighted. To open the highlighted item, tap it once.

- Applications and folders in the menu when using the list view type
- Files in a file list, for example, an image in the images and videos view in Gallery.

  If you tap a file or similar item once, it is not opened, it becomes highlighted. To see the options available for the item, select **Options** or, if available, select an icon from a toolbar.

Select

In this user documentation, opening applications or items by tapping them once or twice is called "selecting". If you need to select several items in a sequence, the menu items to select are separated by arrows. To select **Options** > **Help**, tap **Options**, and then tap **Help**.

Drag

To drag, place your finger or the stylus on the screen, and slide it across the screen. To scroll up or down on a web page, drag the page with your finger or stylus.

 © 2010 Nokia. All rights reserved.

Swipe

To swipe, slide your finger or the stylus quickly left or right on the screen. When viewing an image, to view the next or previous image, swipe the image left or right, respectively.

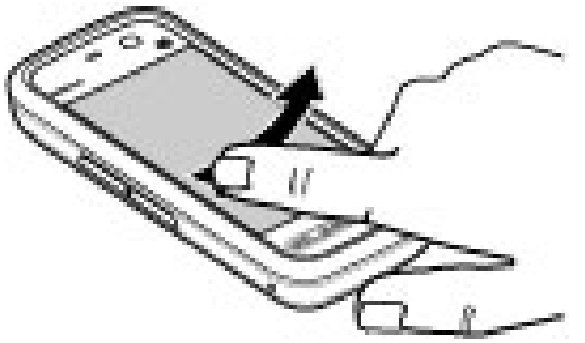

Swipe to answer a call — To answer an incoming call, swipe from left to right.

Swipe to stop an alarm — To stop a sounding alarm, swipe from left to right. To snooze the alarm, swipe from right to left.

Scroll

To scroll up or down in lists that have a scroll bar, drag the slider of the scroll bar.

In some list views, you can scroll by placing your finger or stylus on a list item and dragging up or down. To scroll through contacts, place your finger or stylus on a contact, and drag up or down.

Tip: To view a brief description of an icon, place your finger or stylus on the icon. Descriptions are not available for all icons.

Touch screen backlight

The touch screen backlight is turned off after a period of inactivity. To turn the screen backlight on, tap the screen.

If the touch screen and keys are locked, tapping the screen does not turn the screen backlight on. To unlock the screen and keys, slide the lock switch.

© 2010 Nokia. All rights reserved.

Media key

To open applications such as the music player or browser, select the media key ( ) to open the media bar, and select the application.

Change the ringing tone

Select **Menu** > **Settings** and **Personal** > **Profiles**.

You can use profiles to set and customise the ringing tones, message alert tones, and other tones for different events, environments, or caller groups. To personalise a profile, go to the profile, and select **Options** > **Personalise**.

Nokia support

To find the latest version of this guide, additional information, downloads, and services related to your Nokia product, see www.nokia.com/support or your local Nokia website.

Configuration settings service

To download configuration settings such as MMS, GPRS, e-mail, and other services for your phone model, see www.nokia.com/support.

© 2010 Nokia. All rights reserved.

Nokia Care services

If you need to contact Nokia Care services, check the list of local Nokia Care contact centres at www.nokia.com/customerservice.

Maintenance

For maintenance services, find your nearest Nokia Care point at www.nokia.com/repair.

3. Your device

Phone setup

When you switch on your device for the first time, the Phone setup application is displayed.

To access the Phone setup application later, select **Menu** > **Applications** > **Phone setup**.

To set up the device connections, select **Sett. wizard**.

To transfer data to your device from a compatible Nokia device, select **Switch**.

The available options may vary.

Transfer content

You can use the Switch application to copy content such as phone numbers, addresses, calendar items, and images from your previous Nokia device to your device.

The type of content that can be transferred depends on the model of the device from which you want to transfer content. If that device supports synchronisation, you can also synchronise data between the devices. Your device notifies you if the other device is not compatible.

If the other device cannot be switched on without a SIM card, you can insert your SIM card in it. When your device is switched on without a SIM card, the Offline profile is automatically activated, and transfer can be done.

© 2010 Nokia. All rights reserved.

Transfer content for the first time

1. To retrieve data from the other device for the first time, on your device, select **Menu** > **Applications** > **Switch**.
2. Select the connection type you want to use to transfer the data. Both devices must support the selected connection type.
3. If you select Bluetooth connectivity as the connection type, connect the two devices. To have your device search for devices with Bluetooth connectivity, select **Continue**. Select the device from which you want to transfer content. You are asked to enter a code on your device. Enter a code (1-16 digits), and select **OK**. Enter the same code on the other device, and select **OK**. The devices are now paired.

   Some earlier Nokia devices may not have the Switch application. In this case, the Switch application is sent to the other device as a message. To install the Switch application on the other device, open the message, and follow the instructions on the display.
4. On your device, select the content you want to transfer from the other device.

   When the transfer has started, you can cancel it and continue later.

Content is transferred from the memory of the other device to the corresponding location in your device. The transfer time depends on the amount of data to be transferred.

Display indicators

The device is being used in a GSM network (network service).

You have one or more unread messages in the Inbox folder in Messaging.

You have received new e-mail in the remote mailbox.

There are messages waiting to be sent in the Outbox folder.

You have missed calls.

 © 2010 Nokia. All rights reserved.

The ringing type is set to Silent, and the message and e-mail alert tones are turned off.

A timed profile is active.

The touch screen and keys are locked.

A clock alarm is active.

The second phone line is being used (network service).

All calls to the device are diverted to another number (network service). If you have two phone lines, a number indicates the active line.

A compatible headset is connected to the device.

A compatible text phone is connected to the device.

A GPRS packet data connection is active (network service). indicates that the connection is on hold and that a connection is available.

A packet data connection is active in a part of the network that supports EGPRS (network service). indicates that the connection is on hold and that a connection is available. The icons indicate that EGPRS is available in the network, but your device is not necessarily using an EGPRS connection to transfer data.

Bluetooth connectivity is on.

Data is being transmitted using Bluetooth connectivity. When the indicator is blinking, your device is trying to connect with another device.

A USB connection is active.

Synchronisation is in progress.

Contacts bar

To add a contact to the home screen, in the home screen, select > **Options** > **New contact**, and follow the instructions.

© 2010 Nokia. All rights reserved.

To communicate with a contact, select the contact and from the following: Call the contact. Send a message to the contact. Modify the contact's details. Refresh the contact's web feeds.

To view past communication events with a contact, select the contact. To view the details of a communication event, select the event.

To close the view, select ✕.

Antenna locations

Your device may have internal and external antennas. Avoid touching the antenna area unnecessarily while the antenna is transmitting or receiving. Contact with antennas affects the communication quality and may cause a higher power level during operation and may reduce the battery life.

Cellular antenna		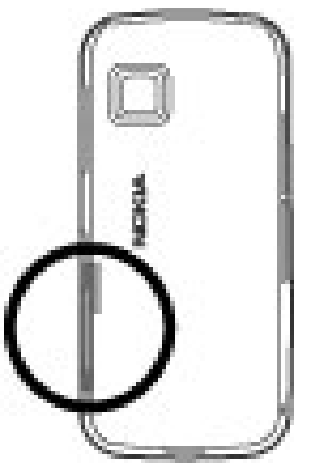 Bluetooth antenna

Offline profile

The offline profile lets you use the device without connecting to the wireless cellular network. When the offline profile is active, you can use your device without a SIM card.

 © 2010 Nokia. All rights reserved.

Activate the offline profile — Press the power key briefly, and select **Offline**.

When you activate the offline profile, the connection to the cellular network is closed. All radio frequency signals to and from the device to the cellular network are prevented. If you try to send messages using the cellular network, they are placed in the Outbox folder to be sent later.

Important: In the Offline profile you cannot make or receive any calls, or use other features that require cellular network coverage. Calls may still be possible to the official emergency number programmed into your device. To make calls, you must first activate the phone function by changing profiles. If the device has been locked, enter the lock code.

Shortcuts

To switch between open applications, press and hold the menu key. Leaving applications running in the background increases the demand on battery power and reduces the battery life.

To start a web connection (network service), in the dialler, tap and hold **0**.

To access applications available in the media bar, such as the music player and web browser, in any view, press the media key.

To change the profile, press the power key, and select a profile.

To call your voice mailbox (network service), in the dialler, tap and hold **1**.

To open a list of last dialled numbers, in the home screen, press the call key.

To use voice commands, in the home screen, press and hold the call key.

Volume and loudspeaker control

To adjust the volume level when you have an active call or are listening to a sound clip, use the volume key.

© 2010 Nokia. All rights reserved.

The built-in loudspeaker allows you to speak and listen from a short distance without having to hold the device to your ear.

To use the loudspeaker during a call, select **Activate loudsp.**.

To turn off the loudspeaker, select **Activate handset**.

Sensor settings and display rotation

When you activate the sensors in your device, you can control certain functions by turning the device.

Select **Menu** > **Settings** and **Phone** > **Sensor settings**.

Select from the following:

- **Sensors** — Activate the sensors.
- **Turning control** — Select **Silencing calls** and **Snoozing alarms** to mute calls and snooze alarms by turning your device so that the display faces down. Select **Auto-rotate display** to rotate the display content automatically when you turn the device on its left side or back to a vertical position. Some applications and features may not support rotating the display content.

Remote lock

To prevent unauthorised use of your device, you can lock your device and memory card remotely using a text message. You must define the text message, and to lock your device, send the text message to your device. To unlock your device, you need the lock code.

To enable remote locking, and to define the text message, select **Menu** > **Settings** and **Phone** > **Phone mgmt.** > **Security** > **Phone and SIM card** > **Remote phone locking** > **Enabled**. Tap the text input field to enter the text message content (5-20 characters), select ✔, and verify the message. Enter the lock code.

 © 2010 Nokia. All rights reserved.

Headset

You can connect a compatible headset or compatible headphones to your device. You may need to select the cable mode.

Warning: When you use the headset, your ability to hear outside sounds may be affected. Do not use the headset where it can endanger your safety.

Do not connect products that create an output signal as this may cause damage to the device. Do not connect any voltage source to the Nokia AV Connector.

When connecting any external device or any headset, other than those approved by Nokia for use with this device, to the Nokia AV Connector, pay special attention to volume levels.

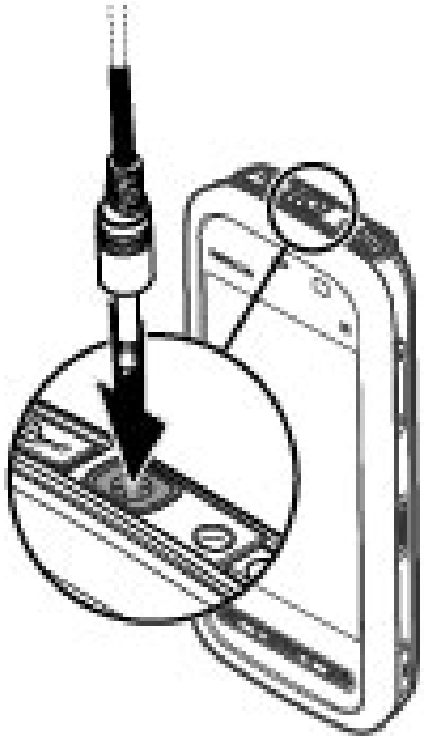

Attach a wrist strap

Tip: Attach the plectrum stylus to the device like a wrist strap.

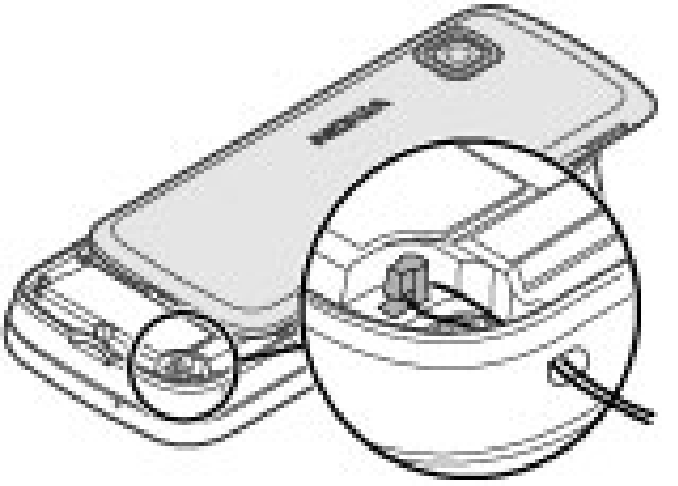

© 2010 Nokia. All rights reserved.

Remove the SIM card

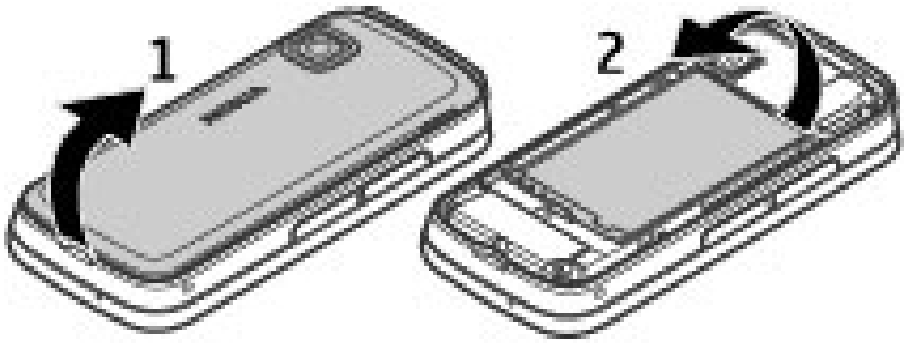

1. Remove the back cover by lifting it from the top end of the device.
2. Remove the battery.
3. Open the cover of the SIM card slot. Place the tip of the stylus in the opening under the battery, and push the SIM card sideways to slide it out of the slot. Pull the SIM card out.
4. Replace the battery and the back cover.

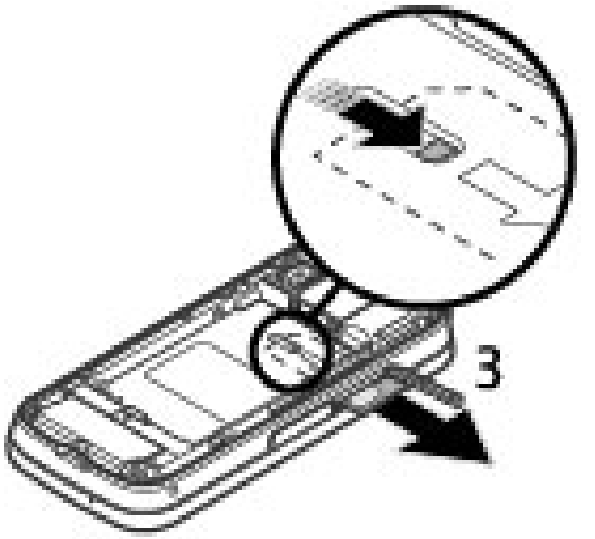

Remove the memory card

Important: Do not remove the memory card during an operation when the card is being accessed. Doing so may damage the memory card and the device, and corrupt data stored on the card.

1. If the device is switched on, before you remove the card, press the power key, and select **Remove memory card**.
2. When **Remove memory card? Some applications will be closed.** is displayed, select **Yes**.
3. When **Remove memory card and press 'OK'** is displayed, open the cover of the memory card slot.

© 2010 Nokia. All rights reserved.

4. Press the memory card to release it from the slot.
5. Pull out the memory card. If the device is switched on, select **OK**.

4. Make calls

Touch screen during calls

Your device has a proximity sensor. To extend battery life and prevent accidental selections, the touch screen is disabled automatically during calls, when you place the device next to your ear.

Do not cover the proximity sensor, for example, with protective film or tape.

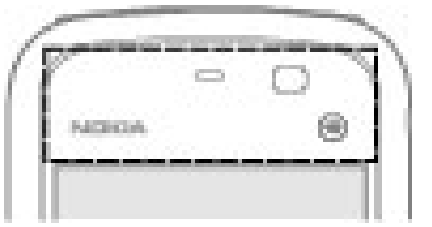

Calls

1. In the home screen, select **Telephone** to open the dialler, and enter the phone number, including the area code. To remove a number, select **C**.

   For international calls, select * twice for the + character (which replaces the international access code), and enter the country code, area code (omit the leading zero if necessary), and phone number.
2. To make the call, press the call key.
3. To end the call (or to cancel the call attempt), press the end key.

   Pressing the end key always ends a call, even if another application is active.

To make a call from the contacts list, select **Menu** > **Contacts**. Go to the desired name. Or, select the search field, enter the first letters or characters of the name, and go to the name. To call the contact, press the call key. If you have saved several numbers for a contact, select the desired number from the list, and press the call key.

© 2010 Nokia. All rights reserved.

During a call

To mute or unmute the microphone, select or .

To put a call on hold or activate the held call, select or .

To switch back to the handset, select .

To end the call, select .

To switch between the active and held calls, select **Options** > **Swap**.

Tip: When you have only one active voice call, to put the call on hold, press the call key. To activate the held call, press the call key again.

To send DTMF tone strings (for example, a password), select **Options** > **Send DTMF**. Enter the DTMF string or search for it in the contacts list. To enter a wait character (w) or a pause character (p), press ***** repeatedly. To send the tone, select **OK**. You can add DTMF tones to the phone number or DTMF field in contact details.

To end an active call and replace it by answering the waiting call, select **Options** > **Replace**.

To end all your calls, select **Options** > **End all calls**.

Many of the options that you can use during a voice call are network services.

Voice mailbox

To call your voice mailbox (network service), in the home screen, select **Telephone**, and select and hold **1**.

1. To change the phone number of your voice mailbox, select **Menu** > **Settings** and **Calling** > **Call mailbox**, a mailbox, and **Options** > **Change number**.
2. Enter the number (obtained from your network service provider), and select **OK**.

 © 2010 Nokia. All rights reserved.

Answer or reject a call

To answer a call, press the call key.

To mute the ringing tone of an incoming call, select .

You can send a text message without rejecting the call, informing the caller that you cannot answer the call. To send the reply message, select **Send msg.**, edit the message text, and press the call key.

If you do not want to answer a call, press the end key. If you activate the **Call divert** > **Voice calls** > **If busy** function in phone settings to divert calls, rejecting an incoming call also diverts the call.

To activate the text message option and write a standard reply message, select **Menu** > **Settings** and **Calling** > **Call** > **Reject call with message**, and **Message text**.

Make a conference call

Your device supports conference calls between a maximum of six participants, including yourself.

1. Make a call to the first participant.
2. To make a call to another participant, select **Options** > **New call**. The first call is put on hold.
3. When the new call is answered, to join the first participant in the conference call, select .

   To add a new person to the call, make a call to another participant, and add the new call to the conference call.

   To have a private conversation with one of the participants, select .

   Go to the participant, and select . The conference call is put on hold on your device. The other participants can still continue the conference call.

   To return to the conference call, select .

   To drop a participant, select , go to the participant, and select .

© 2010 Nokia. All rights reserved.

4. To end the active conference call, press the end key.

Speed dial a phone number

To activate speed dialling, select **Menu** > **Settings** and **Calling** > **Call** > **Speed dialling**.

1. To assign a phone number to one of the number keys, select **Menu** > **Settings** and **Calling** > **Speed dialling**.
2. Go to the key to which you want to assign the phone number, and select **Options** > **Assign**.

   1 is reserved for the voice mailbox.

To call in the home screen, select **Telephone** and the assigned key, and press the call key.

To call in the home screen when speed dialling is active, select **Telephone**, and select and hold the assigned key.

Call waiting

You can answer a call when you have another call in progress.

To activate call waiting (network service), select **Menu** > **Settings** and **Calling** > **Call** > **Call waiting**.

1. To answer the waiting call, press the call key. The first call is put on hold.
2. To switch between the two calls, select **Options** > **Swap**.
3. To end the active call, press the end key.
4. To end both calls, select **Options** > **End all calls**.

Voice dialling

Your device automatically creates a voice tag for the contacts. To listen to the synthesised voice tag, select a contact and **Options** > **Voice tag details**. Scroll to a contact detail, and select **Options** > **Play voice tag**.

 © 2010 Nokia. All rights reserved.

Make a call with a voice tag

Note: Using voice tags may be difficult in a noisy environment or during an emergency, so you should not rely solely upon voice dialling in all circumstances.

When you use voice dialling, the loudspeaker is in use. Hold the device at a short distance away when you say the voice tag.

1. To start voice dialling, in the home screen, press and hold the call key. If a compatible headset with the headset key is attached, press and hold the headset key to start voice dialling.
2. A short tone sounds, and **Speak now** is displayed. Say clearly the name that is saved for the contact.
3. The device plays a synthesised voice tag for the recognised contact in the selected device language, and displays the name and number. To cancel the voice dialling, select **Quit**.

If several numbers are saved for a name, you can say also the name and the number type, such as mobile or telephone.

Log

The Log application stores information about the communication history of the device. The device registers missed and received calls only if the network supports these functions, and the device is switched on and within the network service area.

Recent calls

Select **Menu** > **Log** and **Recent calls**.

To view missed, received, and dialled calls, select **Missed calls**, **Received calls** or **Dialled numbers**.

Tip: To open the dialled numbers list in the home screen, press the call key.

On the toolbar, select from the following:

© 2010 Nokia. All rights reserved.

- **Call** — Call the desired contact.
- **Create message** — Send a message to the desired contact.
- **Open Contacts** — Open the contacts list.

Select **Options** and from the following:

- **Save to Contacts** — Save the highlighted phone number from a recent calls list to your contacts.
- **Clear list** — Clear the selected recent calls list.
- **Delete** — Clear a highlighted event in the selected list.
- **Settings** — Select **Log duration** and the length of time that the communication information is saved in the log. If you select **No log**, no information is saved in the log.

Packet data

Select **Menu** > **Log**.

You may be charged for your packet data connections by the amount of data sent and received. To check the amount of data sent or received during packet data connections, select **Packet data** > **All sent data**or **All received data**.

To clear both sent and received information, select **Options** > **Clear counters**. You need the lock code to clear the information.

Call duration

Select **Menu** > **Log**.

To view the approximate duration of your last call, and dialled and received calls, select **Call duration**.

Monitor all communication events

Select **Menu** > **Log**.

To open the general log where you can monitor all voice calls, text messages, or data connections registered by the device, select the general log tab .

 © 2010 Nokia. All rights reserved.

Subevents, such as a text message sent in more than one part and packet data connections, are logged as one communication event. Connections to your mailbox, multimedia message centre, or web pages are shown as packet data connections.

To view how much data was transferred and how long a certain packet data connection lasted, scroll to an incoming or outgoing event indicated by **GPRS**, and select **Options** > **View**.

To copy a phone number from the log to the clipboard, and paste it into a text message, for example, select **Options** > **Use number** > **Copy**.

To filter the log, select **Options** > **Filter** and a filter.

To set the log duration, select **Options** > **Settings** > **Log duration**. If you select **No log**, all the log contents, recent calls register, and messaging delivery reports are permanently deleted.

5. Write text

You can enter letters, numbers, and special characters in several different ways. The on-screen keyboards allow you to enter characters by tapping them with your fingers or the stylus. Handwriting recognition allows you to write characters directly onto the screen using the stylus as a pen. Handwriting recognition may not be available for all languages.

Tap any text input field to enter letters, numbers, and special characters.

Your device can complete words based on the built-in dictionary for the selected text input language. The device also learns new words from your input.

Virtual keyboard

You can use the virtual keyboard in landscape mode.

To activate the virtual keyboard, select ▦ > **Full screen QWERTY**.

When using the virtual keyboard in full screen mode, you can select keys with your fingers.

© 2010 Nokia. All rights reserved.

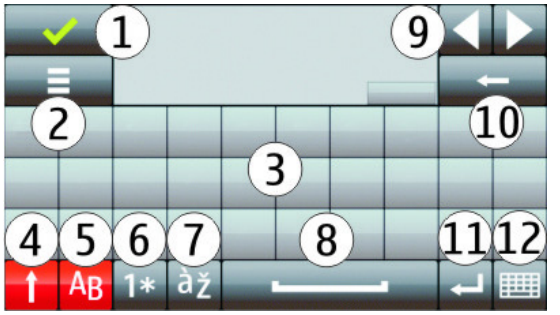

1 — Close - Close the virtual keyboard.

2 — Input menu - Open the touch input options menu to access commands such as **Writing language**.

3 — Virtual keyboard

4 — Shift and caps lock - To enter an uppercase character when writing in lowercase, or vice versa, select the key before entering the character. To activate the caps lock, select the key twice. A line under the key indicates that the caps lock is activated.

5 — Letters

6 — Numbers and special characters

7 — Character accents

8 — Space bar

9 — Move - Move the cursor.

10 — Backspace

11 — Enter - Move the cursor to the next row or text input field. Additional functions are based on the current context (for example, in the web address field of the web browser, it acts as the Go icon).

12 — Input mode - Select the input method. When you tap an item, the current input method view closes, and the selected one opens.

Handwriting

The input methods and languages supported by the handwriting recognition vary by region and may not be available for all languages.

 © 2010 Nokia. All rights reserved.

To activate handwriting mode, select ⌨ > **Handwriting**.

Write legible, upright characters on the text input area, and leave a space between each character.

To teach the device your handwriting style, select ☰ > **Handwriting training**.

To enter letters and numbers (default mode), write words as you would normally. To select number mode, select 12. To enter non-Latin characters, select the corresponding icon, if available.

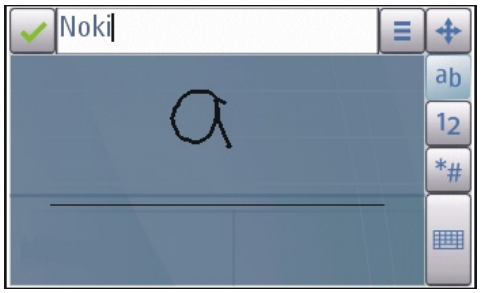

To enter special characters, write them as you would normally, or select *# and the desired character.

To delete characters or move the cursor back, swipe backwards (see Figure 1).

To insert a space, swipe forwards (see Figure 2).

Alphanumeric keypad

Icons and functions

Use the on-screen keypad (**Alphanumeric keypad**) to enter characters like you would with a traditional phone keypad with numbers on the keys. For an explanation of each icon and its function, see the following figure.

© 2010 Nokia. All rights reserved.

1 — Close - Closes on-screen keypad (**Alphanumeric keypad**).

2 — Input menu - Opens the touch input menu, which includes commands such as **Activate predictive text** and **Writing language**.

3 — Text input indicator - Opens a pop-up window, in which you can turn predictive text input modes on or off, change the character case, and switch between letter and number mode.

4 — Input mode - Opens a pop-up window, in which you can select from the available input modes. When you tap an item, the current input method view closes, and the selected one opens.

5 — Arrow keys - Moves the cursor left or right.

6 — Backspace - Deletes the previously entered character.

7 — Number keys - Enters the desired numbers or characters according to the current case and input mode.

 © 2010 Nokia. All rights reserved.

8 — Star - Opens a special characters table.

9 — Shift - Changes the character case, turns predictive text input modes on or off, and switches between the alphabet and number modes.

Traditional text input

Tap a number key (1-9) repeatedly until the desired character appears. There are more characters available for a number key than are visible on the key.

If the next letter is located on the same key as the present one, wait until the cursor appears (or move the cursor forward to end the time-out period), and enter the letter.

To insert a space, tap **0**. To move the cursor to the next line, tap **0** three times.

Predictive text input

With predictive text input, you can enter any word with a single key selection. Predictive text input is based on a built-in dictionary to which you can add new words. Predictive text input is not available for all languages.

1. To activate predictive text input for all editors on the device, select > **Activate prediction**. You can also select > **Activate predictive text**.
2. To write the desired word, use the keys 2-9. Select each key only once for one letter. For example, to write "Nokia" when the English dictionary is selected, select **6** for N, **6** for o, **5** for k, **4** for i, and **2** for a.

   The word suggestion changes after each key selection.
3. When you finish writing the word correctly, move the cursor right to confirm it, or select **0** to add a space.

   If the word is not correct, select ***** repeatedly to view the matching words the dictionary has found one by one.

   If the ? character is displayed after the word, the word is not in the dictionary. To add a word to the dictionary, select **Spell**, enter the word using traditional text input, and select **OK**. The word is added to the dictionary. When the dictionary is full, a new word replaces the oldest added word.

© 2010 Nokia. All rights reserved.

4. Start writing the next word.

Switch between text modes

To deactivate predictive text input for all editors in your device, select > **Deactivate prediction**, or quickly double-tap **#**. Alternatively, you can select > **Predictive text** > **Off**.

Touch input settings

Select **Menu** > **Settings** and **Phone** > **Touch input**.

To modify text input settings for the touch screen, select from the following:

- **Handwriting training** — Open the handwriting training application. Train the device to recognise your handwriting better. This option is not available in all languages.
- **Writing language** — Define which language-specific characters in your handwriting are recognised and how the virtual keyboard is laid out.
- **Writing speed** — Select the writing speed.
- **Guiding line** — Display or hide the guiding line in the writing area. The guiding line helps you write in a straight line, and it also helps the device recognise your writing.
- **Pen trail width** — Select the pen trail width for the text written with the stylus.
- **Writing colour** — Select the colour of the text written with the stylus.
- **Adaptive search** — Activate adaptive search.
- **Touch screen calibration** — Calibrate the touch screen.

6. Contacts

You can save and update contact information, such as phone numbers, home addresses, or e-mail addresses of your contacts. You can add a personal ringing tone or a thumbnail image to a contact. You can also create contact groups, which allow you to send text messages or e-mail to many recipients at the same time.

 © 2010 Nokia. All rights reserved.

To open the contacts list, in the home screen, depending on the home screen theme, select **Contacts** or .

Save and edit names and numbers

1. To add a new contact to the contacts list, tap .
2. Tap a field to enter the information in the field. To close the text input, select . Fill in the fields that you want, and select **Done**.

To edit contacts, select a contact and **Options** > **Edit**.

Contacts toolbar

On the contacts list toolbar, select from the following:

- **Call** — Call the desired contact.
- **Create message** — Send a message to the desired contact.
- **New contact** — Create a new contact.

Manage names and numbers

To copy or delete a contact, or to send a contact as a business card to another device, tap and hold a contact, and select **Copy**, **Delete**, or **Send business card**.

To delete several contacts at the same time, select **Options** > **Mark/Unmark** to mark the desired contacts, and to delete, select **Options** > **Delete**.

To listen to the voice tag assigned to a contact, select the contact and **Options** > **Voice tag details** > **Options** > **Play voice tag**.

Before using voice tags, note the following:

- Voice tags are not language-dependent. They are dependent on the speaker's voice.
- You must say the name exactly as you said it when you recorded it.
- Voice tags are sensitive to background noise. Record voice tags and use them in a quiet environment.

© 2010 Nokia. All rights reserved.

- Very short names are not accepted. Use long names, and avoid similar names for different numbers.

Note: Using voice tags may be difficult in a noisy environment or during an emergency, so you should not rely solely upon voice dialling in all circumstances.

Default numbers and addresses

You can assign default numbers or addresses to a contact. If a contact has several numbers or addresses, you can easily call or send a message to a certain number or address. The default number is also used in voice dialling.

1. In the contacts list, select a contact.
2. Select **Options** > **Defaults**.
3. Select a default to which you want to add a number or an address, and select **Assign**.
4. Select a number or an address you want to set as a default.
5. To exit the Defaults view and save the changes, tap outside the view.

Ringing tones, images, and call text for contacts

You can define a ringing tone for a contact or group, and an image and a call text for a contact. When the contact calls you, the device plays the selected ringing tone and shows the call text or image (if the caller's phone number is sent with the call and your device recognises it).

To define a ringing tone for a contact or a contact group, select the contact or contact group and **Options** > **Ringing tone**, and a ringing tone.

To define a call text for a contact, select the contact and **Options** > **Add call alert text**. Tap the text field to enter the call text, and select ✓.

To add an image for a contact saved in the device memory, select the contact, **Options** > **Add image**, and an image from Gallery.

 © 2010 Nokia. All rights reserved.

To remove the ringing tone, select **Default tone** from the list of ringing tones.

To view, change or remove the image from a contact, select the contact, **Options** > **Image**, and the desired option.

Copy contacts

When you open the contacts list for the first time, the device asks if you want to copy names and numbers from the SIM card to your device.

To start copying, select **OK**.

If you do not want to copy the contacts from the SIM card to your device, select **Cancel**. The device asks if you want to view the SIM card contacts in the contacts directory. To view the contacts, select **OK**. The contacts list opens, and the names stored on your SIM card are indicated with .

SIM services

For availability and information on using SIM card services, contact your SIM card vendor. This may be the network service provider or other vendor.

SIM contacts

To set the names and numbers stored on the SIM card to be shown on the contacts list, select **Options** > **Settings** > **Contacts to display** > **SIM memory**. You can add and edit SIM contacts, or call them.

The numbers you save in the contacts list may not be automatically saved to your SIM card. To save numbers to the SIM card, select a contact and **Options** > **Copy** > **SIM memory**.

To select whether the new contacts you enter are saved to your device or your SIM card, select **Options** > **Settings** > **Default saving memory** > **Phone memory** or **SIM memory**.

© 2010 Nokia. All rights reserved.

Fixed dialling

Select **Menu** > **Contacts** and **Options** > **SIM numbers** > **Fixed dial contacts**.

With the fixed dialling service, you can restrict calls from your device to certain phone numbers. Not all SIM cards support the fixed dialling service. For more information, contact your service provider.

When security features that restrict calls are in use (such as call barring, closed user group, and fixed dialling), calls may be possible to the official emergency number programmed into your device. Call barring and call diverting cannot be active at the same time.

You need your PIN2 code to activate and deactivate fixed dialling or edit your fixed dialling contacts. Contact your service provider for your PIN2 code.

Select **Options** and from the following:

- **Activate fixed dialling** — Activate the fixed dialing.
- **Deactivate fixed dialling** — Deactivate the fixed dialing.
- **New SIM contact** — Enter the contact name and phone number to which calls are allowed.
- **Add from Contacts** — Copy a contact from the list of contacts to the fixed dialling list.

To send text messages to the SIM contacts while the fixed dialling service is active, you need to add the text message centre number to the fixed dialling list.

7. Messaging

Messaging main view

Select **Menu** > **Messaging** (network service).

To create a new message, select **New message**.

Tip: To avoid rewriting messages that you send often, use texts in the Templates folder in My folders. You can also create and save your own templates.

 © 2010 Nokia. All rights reserved.

Messaging contains the following folders:

- **Inbox** — Received messages, except e-mail and cell broadcast messages, are stored here.
- **My folders** — Organise your messages into folders.
- **Mailbox** — Connect to your remote mailbox to retrieve your new e-mail messages, or view your previously retrieved e-mail messages offline.
- **Drafts** — Draft messages that have not been sent are stored here.
- **Sent** — The last messages that have been sent, excluding messages sent using Bluetooth connectivity, are stored here. You can change the number of messages to save in this folder.
- **Outbox** — Messages waiting to be sent are temporarily stored in the outbox, for example, when your device is outside network coverage.
- **Delivery reports** — You can request the network to send you a delivery report of the text messages and multimedia messages you have sent (network service).

Write and send messages

Select **Menu** > **Messaging**.

Important: Exercise caution when opening messages. Messages may contain malicious software or otherwise be harmful to your device or PC.

Before you can create a multimedia message or write a mail, you must have the correct connection settings defined.

The wireless network may limit the size of MMS messages. If the inserted picture exceeds this limit, the device may make it smaller so that it can be sent by MMS.

Only devices that have compatible features can receive and display multimedia messages. The appearance of a message may vary depending on the receiving device.

Check the size limit of mail messages with your service provider. If you attempt to send a mail message that exceeds the size limit of the mail server, the message is

© 2010 Nokia. All rights reserved.

left in the Outbox folder, and the device attempts to resend it periodically. Sending a mail requires a data connection, and continuous attempts to resend the mail may incur charges from your service provider. In the Outbox folder, you can delete such a message or move it to the Drafts folder.

Messaging requires network services.

Send a text or multimedia message — Select **New message**.

Send an audio or mail message — Select **Options** > **Create message**, and the relevant option.

Select recipients or groups from the contacts list — Select from the toolbar.

Enter the number or mail address manually — Tap the **To** field.

Enter the subject of the mail or multimedia message — Enter it in the Subject field, . If the Subject field is not visible, select **Options** > **Message header fields** to change the fields that are visible.

Write the message — Tap the message field.

Add an object to a message or mail — Select and the relevant type of content. The message type may change to multimedia message based on the inserted content.

Send the message or mail — Select , or press the call key.

Your device supports text messages beyond the limit for a single message. Longer messages are sent as two or more messages. Your service provider may charge accordingly. Characters with accents, other marks, or some language options take more space, and limit the number of characters that can be sent in a single message.

Messaging inbox

Receive messages

Select **Menu** > **Messaging** and **Inbox**.

 © 2010 Nokia. All rights reserved.

In the Inbox folder, indicates an unread text message, an unread multimedia message, an unread audio message, and data received through Bluetooth connectivity.

When you receive a message, and **1 new message** are displayed in the home screen. To open the message, select **Show**. To open a message in the Inbox folder, select the message. To reply to a received message, select **Options** > **Reply**.

Multimedia messages

Important: Exercise caution when opening messages. Messages may contain malicious software or otherwise be harmful to your device or PC.

You may receive a notification that a multimedia message is waiting in the multimedia message centre. To start a packet data connection to retrieve the message to your device, select **Options** > **Retrieve**.

When you open a multimedia message ( ), you may see an image and a message. is shown if sound is included, or if video is included. To play the sound or the video, select the indicator.

To see the media objects that have been included in the multimedia message, select **Options** > **Objects**.

If the message includes a multimedia presentation, is displayed. To play the presentation, select the indicator.

Data, settings, and web service messages

Your device can receive many kinds of messages that contain data, such as business cards, ringing tones, operator logos, calendar entries, and e-mail notifications. You may also receive settings from your service provider in a configuration message.

To save the data from the message, select **Options** and the corresponding option.

© 2010 Nokia. All rights reserved.

Web service messages are notifications (for example, news headlines) and may contain a text message or a link. For availability and subscription, contact your service provider.

Set up e-mail

To set up e-mail, select **Menu** > **Messaging** and **Mailbox**.

You can set up several e-mail accounts, for example, a personal e-mail account and a corporate e-mail account.

To set up e-mail from your home screen, select the relevant plug-in. Alternatively, to set up an e-mail account, select **Menu** > **Applications** > **Sett. wizard**.

Nokia Messaging

The Nokia Messaging service automatically transfers e-mail from your existing e-mail address to your device. You can read, respond to, and organise your e-mails on the go. The Nokia Messaging service works with a number of internet e-mail providers that are often used for personal e-mail, such as Google e-mail services.

The Nokia Messaging service may be chargeable. For information on possible costs, contact your service provider or the Nokia Messaging service.

The Nokia Messaging service must be supported by your network and may not be available in all regions.

Nokia Messaging is currently provided on a trial basis.

Install the Nokia messaging application

1. Select **Menu** > **Applications** > **Sett. wizard**.
2. When the Settings wizard is opened for the first time, you are asked to define the e-mail settings after the operator settings. If you have used the Settings wizard before, select **E-mail setup**.
3. In the e-mail setup, read the information on the display, and select **Start** > **Nokia E-mail**.
4. Accept the installation of the Nokia Messaging application.

 © 2010 Nokia. All rights reserved.

5. Enter your e-mail account details.

The Nokia Messaging application is installed in **Menu** > **Applications**.

For more information, see www.email.nokia.com.

Mailbox

Define e-mail settings

Select **Menu** > **Messaging** and **Mailbox**.

To use e-mail, you must have defined a valid internet access point (IAP) in the device and have defined your e-mail settings correctly.

You must have a separate e-mail account. Follow the instructions given by your remote mailbox and internet service provider (ISP).

If you select **Messaging** > **Mailbox** and have not set up your e-mail account, you are prompted to do so. To start creating the e-mail settings with the mailbox guide, select **Start**.

When you create a new mailbox, the name you give to the mailbox replaces Mailbox in the Messaging main view. You can have up to six mailboxes.

Open the mailbox

Select **Menu** > **Messaging** and a mailbox.

When you open the mailbox, the device asks if you want to connect to the mailbox.

To connect to your mailbox and retrieve new e-mail headers or messages, select **Yes**. When you view messages online, you are continuously connected to a remote mailbox using a data connection.

To view previously retrieved e-mail messages offline, select **No**.

To create a new e-mail message, select **Options** > **Create message** > **E-mail**.

When you are online, to end the data connection to the remote mailbox, select **Options** > **Disconnect**

© 2010 Nokia. All rights reserved.

Retrieve e-mail messages

Select **Menu** > **Messaging** and a mailbox.

If you are offline, select **Options** > **Connect** to open a connection to the remote mailbox.

Important: Exercise caution when opening messages. Messages may contain malicious software or otherwise be harmful to your device or PC.

1. When you have an open connection to a remote mailbox, select **Options** > **Retrieve e-mail** > **New** to retrieve all new messages, **Selected** to retrieve only selected messages, or **All** to retrieve all messages from the mailbox.

   To stop retrieving messages, select **Cancel**.
2. To close the connection and view the e-mail messages offline, select **Options** > **Disconnect**.
3. To open an e-mail message, select the message. If the e-mail message has not been retrieved and you are offline, you are asked if you want to retrieve this message from the mailbox.

To view e-mail attachments, open the message, and select the attachment field indicated by . If the attachment has not been retrieved to the device, select **Options** > **Retrieve**.

To retrieve e-mail messages automatically, select **Options** > **E-mail settings** > **Automatic retrieval**.

Setting the device to retrieve e-mail automatically may involve the transmission of large amounts of data through your service provider's network. Contact your service provider for information about data transmission charges.

Delete e-mail messages

Select **Menu** > **Messaging** and a mailbox.

To delete the contents of an e-mail message from the device while still retaining it in the remote mailbox, select **Options** > **Delete** > **Phone only**.

 © 2010 Nokia. All rights reserved.

The device mirrors the e-mail headers in the remote mailbox. Although you delete the message content, the e-mail header stays in your device. If you want to remove the header as well, you must be connected to the server when deleting the message from your device and the remote mailbox. It there is no connection to the server, the header is deleted when you make a connection from your device to the remote mailbox again to update the status.

To delete an e-mail from the device and the remote mailbox, select **Options** > **Delete** > **Phone and server**.

To cancel deleting an e-mail that has been marked to be deleted from the device and server during the next connection ( ), select **Options** > **Restore**.

Disconnect from the mailbox

When you are online, to end the data connection to the remote mailbox, select **Options** > **Disconnect**.

Mail for Exchange

With Mail for Exchange, you can receive your work e-mail to your device. You can read and reply to your e-mails, view and edit compatible attachments, view calendar information, receive and reply to meeting requests, schedule meetings, and view, add, and edit contact information.

ActiveSync

Use of the Mail for Exchange application is limited to over-the-air synchronisation of PIM information between the Nokia device and the authorised Microsoft Exchange server.

Mail for Exchange can be set up only if your company has Microsoft Exchange Server. In addition, your company's IT administrator must have activated Mail for Exchange for your account.

Before starting to set up Mail for Exchange, ensure that you have the following:

- A corporate e-mail ID
- Your office network user name

© 2010 Nokia. All rights reserved.

- Your office network password
- Your network domain name (contact your company's IT department)
- Your Mail for Exchange server name (contact your company's IT department)

Depending on your company's Mail for Exchange server configuration, you may need to enter other information in addition to those listed. If you do not know the correct information, contact your company's IT department.

With Mail for Exchange, the use of the lock code may be mandatory. The default lock code of your device is 12345, but your company's IT administrator may have set a different one for you to use.

You can access and modify the Mail for Exchange profile and settings in the Messaging settings.

View messages on a SIM card

Select **Menu** > **Messaging** and **Options** > **SIM messages**.

Before you can view SIM messages, you must copy them to a folder in your device.

1. Select **Options** > **Mark/Unmark** > **Mark** or **Mark all** to mark messages.
2. Select **Options** > **Copy**. A list of folders opens.
3. To start copying, select a folder. To view the messages, open the folder.

Cell broadcast messages

Select **Menu** > **Messaging** and **Options** > **Cell broadcast**.

Cell broadcast (network service) allows you to receive messages on various topics, such as weather or traffic conditions, from your service provider. For available topics and relevant topic numbers, contact your service provider. This service may not be available for all regions.

Service commands

Select **Menu** > **Messaging** and **Options** > **Service commands**.

 © 2010 Nokia. All rights reserved.

With service commands (network service) you can enter and send service requests (also known as USSD commands), such as activation commands for network services, to your service provider. This service may not be available for all regions.

Messaging settings

The settings may be preconfigured in your device, or you may receive them in a message. To enter settings manually, fill in all fields marked with **Must be defined** or an asterisk.

Some or all message centres or access points may be preset for your device by your service provider, and you may not be able to change, create, edit, or remove them.

Text message settings

Select **Menu** > **Messaging** and **Options** > **Settings** > **Text message**.

Select from the following:

- **Message centres** — View a list of all text message centres that have been defined.
- **Message centre in use** — Select which message centre to use to deliver text messages.
- **Character encoding** — To use character conversion to another encoding system when available, select **Reduced support**.
- **Receive report** — Select whether the network sends delivery reports on your messages (network service).
- **Message validity** — Select how long the message centre resends your message if the first attempt fails (network service). If the message cannot be sent within the validity period, the message is deleted from the message centre.
- **Message sent as** — To learn if your message centre is able to convert text messages into these other formats, contact your service provider.
- **Preferred connection** — Select the connection to use.
- **Reply via same centre** — Select whether you want the reply message to be sent using the same text message centre number (network service).

© 2010 Nokia. All rights reserved.

Multimedia message settings

Select **Menu** > **Messaging** and **Options** > **Settings** > **Multimedia message**.

Select from the following:

- **Image size** — Define the size of the image in a multimedia message.
- **MMS creation mode** — If you select **Guided**, the device informs you if you try to send a message that may not be supported by the recipient. If you select **Restricted**, the device prevents you from sending messages that may not be supported. To include content in your messages without notifications, select **Free**.
- **Access point in use** — Select which access point is used as the preferred connection.
- **Multimedia retrieval** — Select how you want to receive messages, if available. To receive messages automatically in your home network, select **Auto in home netw.**. Outside your home network, you receive a notification that there is a message to retrieve in the multimedia message centre. If you select **Always automatic**, your device automatically makes an active packet data connection to retrieve the message both in and outside your home network. Select **Manual** to retrieve multimedia messages from the message centre manually, or **Off** to prevent receipt of any multimedia messages. Automatic retrieval may not be supported in all regions.
- **Allow anonymous msgs.** — Reject messages from anonymous senders.
- **Receive adverts** — Receive multimedia message advertisements (network service).
- **Receive reports** — Display the status of sent messages in the log (network service).
- **Deny report sending** — Prevent your device from sending delivery reports of received messages.
- **Message validity** — Select for how long the message centre resends your message if the first attempt fails (network service). If the message cannot be sent within this time period, the message is deleted from the message centre.

 © 2010 Nokia. All rights reserved.

The device requires network support to indicate that a sent message has been received or read. Depending on the network and other circumstances, this information may not always be reliable.

E-mail settings

Manage mailboxes

Select **Menu** > **Messaging** and **Options** > **Settings** > **E-mail**.

To select which mailbox you want to use to send and receive e-mail, select **Mailbox in use** and a mailbox.

To remove a mailbox and its messages from your device, select **Mailboxes**, tap the mailbox to be removed if it is not already highlighted, and select **Options** > **Delete**.

To create a new mailbox, select **Mailboxes** > **Options** > **New mailbox**. The name you give to the new mailbox replaces Mailbox in the Messaging main view. You can have up to six mailboxes.

Select **Mailboxes** and a mailbox to change the connection settings, user settings, retrieval settings, and automatic retrieval settings.

Contacts on Ovi

About Ovi Contacts

With Ovi Contacts, you can stay connected to the people who matter most. Search for contacts, and discover friends in the Ovi community. Keep in touch with your friends - chat, share your location and presence, and easily follow what your friends are up to and where they are. You can even chat with friends who use Google Talk™.

You can also sync your contacts, calendar, and other content between your Nokia device and Ovi.com. Your important information is stored and kept up-to-date both in your device and on the web. With Ovi Contacts, you can make your contacts list dynamic and be confident that your contacts are stored on Ovi.com.

© 2010 Nokia. All rights reserved.

You must have a Nokia Account to use the service. Create an account on your mobile device, or visit www.ovi.com on your PC.

Using Ovi Contacts may involve the transmission of large amounts of data through your service provider's network. Contact your network service provider for information about data transmission charges.

Start using Ovi Contacts

Select **Contacts**, and open the Ovi tab.

The Ovi Contacts service is part of Ovi, and uses the same account information.

If you are new to Ovi and its services, to start using the Ovi Contacts application, you must register to Ovi by creating a Nokia account.

Create a Nokia account

1. Select **Ovi Chat**, and when prompted, connect to the internet.
2. Enter the required information.
3. In the My profile view, enter your profile information. Your first and last name are mandatory details.
4. Select **Done**.

If you have already registered to Ovi using your PC or mobile device, you can start using Ovi Contacts with the same account details.

Sign in to Ovi Contacts and activate the service — Select **Ovi Chat**, and enter your user name and password. If you have not yet provided your profile information for Ovi Contacts, do so, and select **Done**. Your first and last name are mandatory details.

Connect to the service

Select **Menu** > **Contacts**, and open the Ovi tab.

Connect to Ovi Contacts — Select **Go online** and the connection method.

Cancel the connection — Select **Options** > **Cancel connecting**.

 © 2010 Nokia. All rights reserved.

A packet data connection may generate additional data transmission charges. For pricing details, contact your network service provider.

Select **Go online** > **Options** and from the following:

- **Select** — Select the item.
- **Go online** — Connect to the service if you are offline.
- **My profile** — Edit your profile information.
- **Recommend to friend** — Invite a contact to join Ovi Contacts. The invitation is sent as a text message.
- **Settings** — Modify the Ovi Contacts settings.

The available options may vary.

Create and edit your profile

Edit your profile information — Select **My profile**.

View the profiles of your Ovi Contacts friends — Select a friend and **Options** > **Profile**.

Your profile information is visible to your Ovi Contacts friends. Only the following profile details are displayed to other Ovi Contacts users, for example during a search: first name and last name. To change your privacy settings, access Ovi on your PC, and sign in to your Nokia account.

Change your profile image — Select the profile image, **Select existing image**, and the new image. You can also edit or remove the current profile image or capture a new one.

Change your availability — By default, your availability is set to **Available**. To change your availability, select the icon.

Tell your friends what you are doing at the moment — Select **What are you doing?**, and enter text in the field.

Show your friends what music you are currently listening to — Select **Now playing**. To do this, you must allow your now playing information to be shared in the presence settings.

© 2010 Nokia. All rights reserved.

Edit your contact information — Select a field, and enter text.

In the My profile view, select **Options** and from the following:

- **Edit text** — Cut, copy, or paste text.
- **Change** — Change your status (when the status field is selected).
- **Undo changes** — Undo the changes you made in the profile view.

The available options may vary.

Find and add friends

Select **Options** > **Invite friend**.

Search for a friend — Enter the name of the friend in the Search friends field, and select the search icon. You cannot search for friends based on their mobile number or e-mail address.

Browse the search results — Select **Next results** or **Previous results**.

Start a new search — Select **New search**.

If the friends you searched for could not be found, they are not registered Ovi members, or they have chosen to be invisible in searches. When prompted, send a text message to your friends to invite them to join Ovi Contacts.

Send an invitation to join Ovi Contacts — Select **Select service:** and the service you know your friend uses. Enter your friend's user name, and select the send icon.

Select **Options** and from the following:

- **Select** — Select an item.
- **Open** — Open an item.
- **Invite as friend** — Send an invitation to the contact.
- **Show profile** — View the profile of the contact.
- **Renew invitation** — Resend an invitation to join Ovi Contacts to a pending friend.
- **Search** — Search for the contact whose name or other related keyword you entered in the Search friends field.
- **Edit text** — Cut, copy, or paste text.

 © 2010 Nokia. All rights reserved.

The available options may vary.

Chat with your friends

Start a chat with a friend — Select the friend.

Send a chat message — Enter the text in the message field, and select the send icon.

In the chat view, select **Options** and from the following:

- **Send** — Send the message.
- **Add smiley** — Insert a smiley.
- **Send my location** — Send your location details to your chat partner (if supported by both devices).
- **Profile** — View the details of a friend.
- **My profile** — Select your presence status or profile image, personalise your message, or change your details.
- **Edit text** — Copy or paste text.
- **End chat** — End the active chat.
- **Exit** — End all active chats, and close the application.

The available options may vary.

To receive location information from your friend, you must have the Maps application. To send and receive location information, both the Maps and Positioning applications are needed.

View the location of your friend — Select **Show on map**.

Return to the Ovi Contacts main view without ending the chat — Select **Back**.

Add, call, or copy phone numbers from a chat — Go to a phone number in a chat, and select **Options** and the appropriate option.

Ovi Sync

To sync your device with Ovi, you must have a Nokia account and activate the Ovi Contacts service on your device.

© 2010 Nokia. All rights reserved.

Sync your device with Ovi

1. If you sync your device with Ovi for the first time, use the Sync wizard to select what content you want to sync, and the sync interval.
2. Select **Synchronise**. If your device is in the Offline profile, connect to the internet when prompted.

Select **Options** and from the following:

- **Start** — Sync your device with Ovi.
- **Cancel** — Cancel an ongoing sync.
- **Synchronisation settings** — Modify your sync settings.

The available options may vary.

Share your location

Open the Contacts application and the Ovi tab.

To share your location, select **Options** > **Settings** > **Presence** > **Share my location** and from the following:

- **Sharing allowed** — Allow your friends to see your location.
- **My shared landmarks** — Select the landmarks from where your location is broadcast to your friends.
- **Refresh interval** — Select how often you broadcast your current location.

Add and select landmarks:

To add a location to the landmarks list, select **Share my location** > **My shared landmarks** > **Options** > **New landmark**.

To add your current location as a landmark, select **Current position**.

To browse for a location on a map, select **Select from map**.

To add a landmark manually, select **Enter manually**.

To select the locations you want to share with your friends, select **Share my location** > **My shared landmarks**, and select the landmarks from the list. Select **Options** to edit, mark, and unmark items on the list.

 © 2010 Nokia. All rights reserved.

Whenever you are online with the Contacts on Ovi service, and in one of the selected locations, your friends can see your location.

Ovi Contacts settings

Select **Options** > **Settings**.

Select from the following:

- **Account** — Access your account details, and define your visibility to others in a search.
- **Presence** — Show information about your location to your friends, and allow them to see when you are making a phone call (call status).
- **Personalisation** — Modify the settings related to the startup and tones of the Ovi Contacts application, and automatically accept friend invitations.
- **Connection** — Select the network connection to use, and activate roaming warnings.

  Using a packet data connection may involve the transmission of large amounts of data through your service provider's network. For information about data transmission charges, contact your network service provider.
- **Exit** — End all active chats, and close the application.

Nokia account settings

Select **Options** > **Settings** > **Account**.

Edit your account details — Select **My account**.

Define your visibility in searches — Select **My account** > **Visibility in search**. You must be online to change your visibility.

Presence settings

Select **Options** > **Settings** > **Presence**.

Modify presence settings

Select from the following:

- **Share my location** — Allow your friends to see your location.

© 2010 Nokia. All rights reserved.

- **Share now playing** — Allow your friends to see what music you are currently listening to on your mobile device.
- **Share call status** — Allow your friends to see your call status.

Share your location

Select **Share my location** and from the following:

- **Sharing allowed** — Allow your friends to see your location in selected landmarks.
- **My shared landmarks** — Select the landmarks from where your location is broadcast to your friends.
- **Refresh interval** — Select how often you broadcast your current location.

Add a location to the landmarks list — Select **Share my location** > **My shared landmarks** > **Options** > **New landmark**.

Add your current location as a landmark — Select **Current position**.

Browse for a location on a map — Select **Select from map**.

Add a landmark manually — Select **Enter manually**.

Select locations you want to share with your friends

1. Select **Share my location** > **My shared landmarks**.
2. Select the landmarks from the list.
3. Select **Options** to edit, mark, and unmark items on the list. Depending on your settings, your friends can see your location when you are in one of the selected locations.

Personalisation settings

Select **Options** > **Settings** > **Personalisation**.

Select from the following:

- **Login on start-up** — Sign in automatically to Ovi Contacts when you switch on your mobile device.

 © 2010 Nokia. All rights reserved.

- **Auto-accept friend invit.** — Accept friend requests automatically without notification.
- **Auto-accept voice msgs.** — Allow voice message to be accepted automatically.
- **Message tone** — Select a tone for new messages.
- **Friend online tone** — Select the tone that sounds when a friend comes online.
- **Icon on Home screen** — Add the Ovi Contacts shortcut icon to your device home screen.

Connection settings

Select **Options** > **Settings** > **Connection**.

Modify connection settings — Select **Network connection** and the desired connection. To use the default connection defined in your device connection settings, select **Default connection**.

Set the device to notify you when your home network is not available — To receive a warning when your device is trying to connect to another network, select **Roaming warning** > **On**.

8. Personalise your device

You can personalise your device by changing the home screen, tones, or themes.

Change the look of your device

Select **Menu** > **Settings** and **Personal** > **Themes**.

You can use themes to change the look of the display, such as wallpaper and main menu layout.

To change the theme that is used for all the applications in your device, select **General**. To preview a theme before activating it, scroll to the theme, and wait for a few seconds. To activate the theme, select **Options** > **Set**. The active theme is indicated by ✓.

To change the layout of the main menu, select **Menu**.

© 2010 Nokia. All rights reserved.

To change the look of the home screen, select **Home scr. theme**.

To have a wallpaper image or a slide show of changing images as the background in the home screen, select **Wallpaper** > **Image** or **Slide show**.

To change the image displayed in the home screen when a call is received, select **Call image**.

Profiles

Select **Menu** > **Settings** and **Personal** > **Profiles**.

You can use profiles to set and customise the ringing tones, message alert tones, and other tones for different events, environments, or caller groups. The name of the selected profile is displayed at the top of the home screen. If the General profile is in use, only the date is displayed.

To change a profile, scroll to the profile, and select **Options** > **Activate**.

To personalise a profile, scroll to the profile, and select **Options** > **Personalise**. Select the setting you want to change.

To set the profile to be active until a certain time within the next 24 hours, scroll to the profile, select **Options** > **Timed**, and set the time. When the time expires, the profile changes back to the previously active non-timed profile. When the profile is timed, is displayed in the home screen. The Offline profile cannot be timed.

To create a new profile, select **Options** > **Create new**.

9. Music folder

Music player

Music player supports file formats such as AAC, AAC+, eAAC+, MP3, and WMA. Music player does not necessarily support all features of a file format or all the variations of file formats.

 © 2010 Nokia. All rights reserved.

You can also use Music player to listen to podcasts. Podcasting is a method for delivering audio or video content over the internet using either RSS or Atom technologies for playback on mobile devices and computers.

Play a song or a podcast

To open Music player, select **Menu** > **Music** > **Music player**.

You may have to refresh the music and podcast libraries after you have updated the song or podcast selection in your device. To add all available items to the library, select **Options** > **Refresh library**.

To play a song or a podcast:

1. Select categories to navigate to the song or podcasts you want to hear.
2. To play an item, select the item from the list.

To pause playback, tap ▯▯; to resume, tap ▷.

© 2010 Nokia. All rights reserved.

To fast-forward or rewind, tap and hold ⏭ or ⏮.

To go to the next item, tap ⏭. To return to the beginning of the item, tap ⏮. To skip to the previous item, tap ⏮ again within 2 seconds after a song or podcast has started.

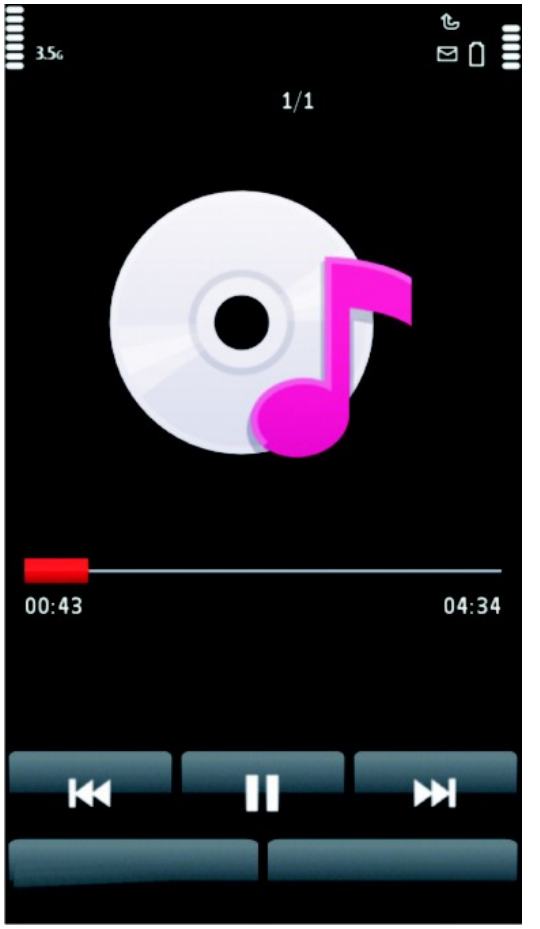

To turn random play (🔀) on or off, select **Options** > **Shuffle play**.

To repeat the current item (🔂), all items (🔁), or to turn repeat off, select **Options** > **Repeat**.

If you play podcasts, shuffle and repeat are automatically turned off.

To adjust the volume, press the volume key.

To modify the tone of the music playback, select **Options** > **Equaliser**.

To modify the balance and stereo image or to enhance the bass, select **Options** > **Settings**.

To return to the home screen and leave the player playing in the background, press the end key.

To close the player, select **Options** > **Exit**.

Playlists

Select **Menu** > **Music** > **Music player** and **Playlists**.

To view details of the playlist, select **Options** > **Playlist details**.

Create a playlist

1. Select **Options** > **New playlist**.
2. Enter a name for the playlist, and select **OK**.
3. To add songs now, select **Yes**; or to add the songs later, select **No**.

 © 2010 Nokia. All rights reserved.

4. If you select **Yes**, select artists to find the songs you want to add to the playlist. Select **Add** to add items.

   To show the song list under an artist title, select **Expand**. To hide the song list, select **Collapse**.

5. When you have made your selections, select **Done**.

   If a compatible memory card is inserted, the playlist is saved to the memory card.

To add more songs later, when viewing the playlist, select **Options** > **Add songs**.

To add songs, albums, artists, genres, and composers to a playlist from the different views of the music menu, select an item and **Options** > **Add to playlist** > **Saved playlist** or **New playlist**.

To remove a song from a playlist, select **Options** > **Remove**. This does not delete the song from the device; it only removes it from the playlist.

To reorder songs in a playlist, select the song you want to move, and **Options** > **Reorder playlist**. To grab a song and drop it to a new position, select the song in the desired position and **Drop**. To finish reordering the playlist, select **Done**.

Podcasts

Select **Menu** > **Music** > **Music player** and **Podcasts**.

The podcast menu displays the podcasts available in the device.

Podcast episodes have three states: never played, partially played, and completely played. If an episode is partially played, it plays from the last playback position the next time it is played. If an episode has never been played or completely played, it plays from the beginning.

Transfer music from a computer

You can use the following methods to transfer music:

- To install Nokia Ovi Player to manage and organise your music files, download the PC software from www.ovi.com, and follow the instructions.

© 2010 Nokia. All rights reserved.

- To view your device on a computer as a mass memory device where you can transfer any data files, make the connection with a compatible USB data cable or Bluetooth connectivity. If you are using a USB data cable, select **Mass storage** as the connection mode. A compatible memory card must be inserted in the device.
- To synchronise music with Windows Media Player, connect a compatible USB data cable, and select **Media transfer** as the connection mode. A compatible memory card must be inserted in the device.

To change the default USB connection mode, select **Menu** > **Settings** and **Connectivity** > **USB** > **USB connection mode**.

Nokia Ovi Player

With Nokia Ovi Player, you can download music from Ovi Music, transfer music to your device from your computer, and manage and organise your music files. To download Nokia Ovi Player, go to www.ovi.com.

You need an internet connection to download music.

Download, transfer, and manage music between your computer and mobile device

1. Open Nokia Ovi Player on your computer. If you want to download music, register or sign in.
2. Connect your device to the computer with a compatible USB data cable.
3. To select the connection mode on your device, select **Media transfer**.

Ovi Music

With Ovi Music (network service), you can search, browse, purchase, and download music to your device.

The Ovi Music service will eventually replace the Music store.

Select **Menu** > **Music** > **Ovi Music**.

To download music, you first need to register for the service.

 © 2010 Nokia. All rights reserved.

Downloading music may involve additional costs and the transmission of large amounts of data (network service). For information about data transmission charges, contact your network service provider.

To access Ovi Music, you must have a valid internet access point in the device. You may be asked to select the access point to use when connecting to Ovi Music.

Select the access point — Select **Default access point**.

The availability and appearance of Ovi Music settings may vary. The settings may also be predefined and you may not be able to modify them. When browsing Ovi Music, you may be able to modify the settings.

Modify Ovi Music settings — Select **Options** > **Settings**.

Ovi Music is not available for all countries or regions.

Nokia Podcasting

With the Nokia Podcasting application (network service), you can search, discover, subscribe to, and download podcasts over the air, and play, manage, and share audio and video podcasts with your device.

Podcasting settings

To open Nokia Podcasting, select **Menu** > **Music** > **Podcasting**.

Before using Nokia Podcasting, define your connection and download settings.

Check with your service provider for terms and data service fees before using different connection methods. For example, a flat rate data plan can allow large data transfers for one monthly fee.

Connection settings

To edit the connection settings, select **Options** > **Settings** > **Connection** and from the following:

- **Default access point** — Select the access point to define your connection to the internet.

© 2010 Nokia. All rights reserved.

- **Search service URL** — Define the podcast search service URL to be used in searches.

Download settings

To edit the download settings, select **Options** > **Settings** > **Download** and from the following:

- **Save to** — Define the location where you want to save your podcasts.
- **Update interval** — Define how often podcasts are updated.
- **Next update date** — Define the date of the next automatic update.
- **Next update time** — Define the time of the next automatic update.

  Automatic updates only occur if a specific default access point is selected and Nokia Podcasting is running. If Nokia Podcasting is not running, the automatic updates are not activated.
- **Download limit (%)** — Define the percentage of memory that is reserved for podcast downloads.
- **If limit exceeds** — Define what to do if the downloads exceed the download limit.

Setting the application to retrieve podcasts automatically may involve the transmission of large amounts of data through your service provider's network. Contact your service provider for information about data transmission charges.

To restore the default settings, select **Options** > **Restore default** in the settings view.

Downloads

After you have subscribed to a podcast, from directories, search, or by entering a web address, you can manage, download, and play episodes in Podcasts.

To see the podcasts you have subscribed to, select **Podcasting** > **Podcasts**.

To see individual episode titles (an episode is a particular media file of a podcast), select the podcast title.

 © 2010 Nokia. All rights reserved.

To start a download, select the episode title. To download or to continue to download selected or marked episodes, select **Options** > **Download**. You can download multiple episodes at the same time.

To play a portion of a podcast during download or after partial downloading, select the podcast and **Options** > **Play preview**.

Fully downloaded podcasts can be found in the Podcasts folder, but are not shown until the library is refreshed.

Radio

Listen to the radio

Select **Menu** > **Music** > **Radio**.

The FM radio depends on an antenna other than the wireless device antenna. A compatible headset or accessory needs to be attached to the device for the FM radio to function properly.

When you open the application for the first time, you can choose to have the local stations tuned automatically.

To listen to the next or the previous station, select or .

To mute the radio, select .

Select **Options** and from the following:

- **Stations** — View saved radio stations.
- **Tune stations** — Search for radio stations.
- **Save** — Save the radio station.
- **Activate loudspeaker** or **Deactivate loudspeaker** — Turn the loudspeaker on or off.
- **Alternative frequencies** — Select whether you want the radio to automatically search for a better RDS frequency for the station if the frequency level becomes low.
- **Play in background** — Return to the home screen with the radio playing in the background.

© 2010 Nokia. All rights reserved.

Manage radio stations

Select **Menu** > **Music** > **Radio**.

To listen to saved stations, select **Options** > **Stations**, and select a station from the list.

To remove or rename a station, select **Options** > **Stations** > **Options** > **Delete** or **Rename**.

To set the desired frequency manually, select **Options** > **Tune stations** > **Options** > **Manual tuning**.

10. Camera

Your device supports an image capture resolution of 1600x1200 pixels. The image resolution in this guide may appear different.

Activate the camera

To activate the camera, press the capture key.

Image capture

Still image controls and indicators

The still image viewfinder displays the following:

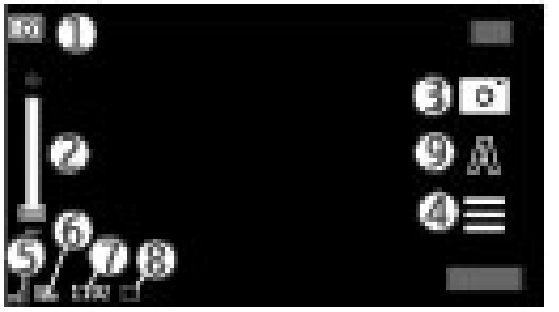

1 — Mode indicator

2 — Zoom slider. To activate or deactivate the zoom slider, tap the screen.

 © 2010 Nokia. All rights reserved.

3 — Capture icon

4 — Capture settings

5 — Battery charge level indicator

6 — Image resolution indicator

7 — Image counter (the estimated number of images you can capture using the current image quality setting and available memory)

8 — Memory in use. Depending on the setup of your device, there are the following options: device memory ( ) or memory card ( ).

9 — Scene modes

Capture and recording settings

To open the capture and recording settings view before capturing an image or recording a video clip, select **Menu** > **Applications** > **Camera** and .

The capture and recording settings view provides you with shortcuts to different items and settings before capturing an image or recording a video clip.

The capture and recording settings return to the default settings after you close the camera.

Select from the following:

A — Select the scene.

or — Switch between video and image mode.

or — Show or hide the viewfinder grid (images only).

— Activate the self-timer (images only).

— Activate sequence mode (images only).

— Open Gallery.

Image settings:

— Select a colour effect.

© 2010 Nokia. All rights reserved.

— Adjust the white balance. Select the current lighting conditions. This allows the camera to reproduce colours more accurately.

— Adjust the exposure compensation (images only). If you are shooting a dark subject against a very light background, such as snow, adjust the exposure to +1 or +2 to compensate for the background brightness. For light subjects against a dark background, use -1 or -2.

ISO A — Adjust light sensitivity (images only). Increase the light sensitivity in low light conditions to avoid too dark images and blurry images. Increasing the light sensitivity may also increase the image noise.

— Adjust contrast (images only). Adjust the difference between the lightest and darkest parts of the image.

— Adjust sharpness (images only).

The screen display changes to match the settings you define.

The capture settings are shooting-mode specific. Switching between the modes does not reset the defined settings.

If you select a new scene, the capture settings are replaced by the selected scene. You can change the capture settings after selecting a scene if needed.

Saving the captured image may take longer if you change the zoom, lighting, or colour settings.

Capture images

When capturing an image, note the following:

- Use both hands to keep the camera still.
- The quality of a digitally zoomed image is lower than that of a non-zoomed image.
- The camera goes into battery saving mode if there are no actions for about a minute. To continue capturing images, select **Continue**.

To capture an image, do the following:

1. To switch from video mode to image mode, if necessary, select > .

 © 2010 Nokia. All rights reserved.

2. To capture an image, press the capture key. Do not move the device before the image is saved and the final image displayed.

To zoom in or out when capturing an image, use the zoom slider.

To leave the camera open in the background and use other applications, press the menu key. To return to the camera, press and hold the capture key.

After capturing an image

After you capture an image, select from the following options (available only if you have selected **Options** > **Settings** > **Show captured image** > **Yes**):

- — Send the image in a multimedia or e-mail message, or through connection methods such as Bluetooth connectivity.
- — Upload the image to a compatible online album.
- **Delete** — Delete the image.

To use the image as wallpaper in the home screen, select **Options** > **Use image** > **Set as wallpaper**.

To set the image as a default call image to be used for every call situation, select **Options** > **Use image** > **Set as call image**.

To assign the image to a contact, **Options** > **Use image** > **Assign to contact**.

To return to the viewfinder to capture a new image, press the capture key.

Scenes

A scene helps you to find the right colour and lighting settings for the current environment. The settings of each scene have been set according to a certain style or environment.

The default scene in image mode is **Automatic**, and in video mode **Automatic** (both indicated with A).

To change the scene, select > **Scene modes** and a scene.

© 2010 Nokia. All rights reserved.

To make your own scene suitable for a certain environment, scroll to **User defined** M, and select **Change**. In the user defined scene you can adjust different lighting and colour settings. To copy the settings of another scene, select **Based on scene mode** and the desired scene. To save the changes and return to the scenes list, select **Back**. To activate your own scene, select **User defined** > **Select**.

You in the image — self-timer

Use the self-timer to delay the capture so that you can include yourself in the image.

To set the self-timer delay, select ☰ > ⏲, and the delay needed before the image is captured.

To activate the self-timer, select **Activate**. The stopwatch icon on the screen blinks and the remaining time is displayed when the timer is running. The camera captures the image after the selected delay elapses.

To switch off the self-timer, select ☰ > ⏲ > ⏲.

Tip: Select **2 seconds** to keep your hand steady when capturing an image.

Capture images in a sequence

Select **Menu** > **Applications** > **Camera**.

To start capturing images in a quick sequence, select **Menu** > **Applications** > **Camera** and ☰ > **Sequence**. To close the settings window, tap the screen above the window. Press and hold the capture key. The device captures images until you release the key or until the memory runs out. If you press the capture key briefly, the device captures 18 images in a sequence.

The captured images are displayed in a grid. To view an image, select the image. To return to the sequence mode viewfinder, press the capture key.

You can also use sequence mode with the self-timer.

To deactivate sequence mode, select ☰ > **Single shot**.

 © 2010 Nokia. All rights reserved.

Video recording

Record videos

1. To switch from image mode to video mode, if necessary, select ☰ and the video mode 🎥.
2. To start recording, press the capture key or tap ●. A red record icon is displayed, and a tone sounds.
3. To pause recording at any time, select **Pause**. To resume, select **Continue**. If you pause recording and do not press any key within one minute, the recording stops.

   To zoom in or out of the subject, use the zoom key in your device.
4. To stop recording, press the capture key. The video clip is automatically saved in Gallery. The maximum length of a video clip is approximately 30 seconds with sharing quality and 90 minutes with other quality settings.

Video recording controls and indicators

The video viewfinder displays the following:

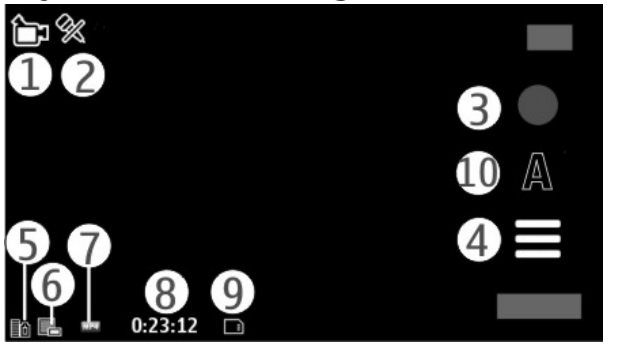

1 — Mode indicator

2 — Audio mute indicator

3 — Record icon

4 — Recording settings

5 — Battery charge level indicator

© 2010 Nokia. All rights reserved.

6 — Video quality indicator. To modify this setting, select **Options** > **Settings** > **Video quality**.

7 — Video clip file type

8 — Available recording time. When you are recording, the current video length indicator also shows the elapsed and remaining time.

9 — The location to which the video clip is saved

10 — Scene modes

After recording a video clip

After you record a video clip, select from the following options (available only if you have selected **Options** > **Settings** > **Show last captured video** > **Yes**):

- **Play** — Play the video clip you just recorded.
- — Upload the image to a compatible online album.
- **Delete** — Delete the video clip.

To return to the viewfinder to record a new video clip, press the capture key.

11. Gallery

To store and organise your images, video clips, sound clips, and streaming links, select **Menu** > **Gallery**.

Tip: To access the images and video clips view quickly, tap the media key ( ) to open the media bar, and select .

View and organise files

Select **Menu** > **Gallery** and from the following:

- **Images & videos** — View images in the image viewer and videos in Video centre.
- **Songs** — Open Music player.
- **Sound clips** — Listen to sound clips.

 © 2010 Nokia. All rights reserved.

- **Other media** — View presentations.

You can browse, open, and create folders; and mark, copy, move, and add items to folders.

Files stored on your compatible memory card (if inserted) are indicated with .

To open a file, select a file from the list. Video clips and files with the .ram file extension open and play in Video centre, and music and sound clips in Music player.

To copy or move files to the memory card (if inserted) or device memory, select a file, **Options** > **Organise** > **Copy** or **Move**, and from the available options.

View images and videos

Select **Menu** > **Gallery** and **Images & videos**.

The images, video clips, and folders are displayed in a loop and ordered by date and time. To browse the files one by one, swipe left or right. To browse files in groups, swipe up or down.

To open a file, select a file from the list. To zoom in an image, use the volume key in your device.

Select **Options** and from the following:

- **Edit** — Edit a video clip or an image.
- **Use file** — To use the image as wallpaper in the home screen, select **Set as wallpaper**.

  To set the image as a generic call image, select **Set as call image**.

  To set the image as a call image for a contact, select **Assign to contact**.

  To set the video clip as a ringing tone, select **As ringing tone**.

  To assign the video clip as a ringing tone for a contact, select **Assign to contact**.

The toolbar helps you select frequently used functions with images, video clips, and folders.

From the toolbar, select from the following:

© 2010 Nokia. All rights reserved.

- **Send** — Send the selected image or video clip.
- **Edit** — Edit the selected image or video clip.
- **Delete** — Delete the selected image or video clip.

Organise images and videos

Select **Menu** > **Gallery** and **Images & videos** > **Options** and from the following:

- **Folder options** — To move files to folders, select **Move to folder**. To create a new folder, select **New folder**.
- **Organise** — To copy files to folders, select **Copy**. To move files to folders, select **Move**.
- **View by** — View files by date, title, or size.

12. Nokia Video Centre

With Nokia Video Centre (network service), you can download and stream video clips over the air from compatible internet video services using a packet data connection. You can also transfer video clips from a compatible PC to your device and view them in Video centre.

Using packet data access points to download videos may involve the transmission of large amounts of data through your service provider's network. Contact your service provider for information about data transmission charges.

Your device may have predefined services.

Service providers may provide free content or charge a fee. Check the pricing in the service or from the service provider.

View and download video clips

Connect to video services

1. Select **Menu** > **Applications** > **Video centre**.

 © 2010 Nokia. All rights reserved.

2. To connect to a service to install video services, select **Add new services** and the desired video service from the service catalogue.

View a video clip

To browse the content of installed video services, select **Video feeds**.

The content of some video services is divided into categories. To browse video clips, select a category. To search for a video clip in the service, select **Video search**. Search may not be available in all services.

To view information about the selected video clip, select **Options** > **Video details**.

Some video clips can be streamed over the air, but others must be first downloaded to your device. To download a video clip, select **Options** > **Download**. Downloads continue in the background if you exit the application. The downloaded video clips are saved in My videos. To stream a video clip or view a downloaded one, select **Options** > **Play**. When the video clip is playing, to use the control keys for controlling the player, tap the screen. To adjust the volume, use the volume key.

Warning: Continuous exposure to high volume may damage your hearing. Listen to music at a moderate level, and do not hold the device near your ear when the loudspeaker is in use.

Schedule downloads

Setting the application to download video clips automatically may involve the transmission of large amounts of data through your service provider's network. For information about data transmission charges, contact your service provider. To schedule an automatic download for video clips in a service, select a category and **Options** > **Schedule downloads**. Video centre automatically downloads new video clips daily at the time you define.

To cancel scheduled downloads for a category, select **Manual download** as the download method.

© 2010 Nokia. All rights reserved.

Video feeds

Select **Menu** > **Applications** > **Video centre**.

The content of the installed video services is distributed using RSS feeds. To view and manage your feeds, select **Video feeds**.

Select **Options** and from the following:

- **Feed subscriptions** — Check your current feed subscriptions.
- **Feed details** — View information about a video.
- **Add feed** — Subscribe to new feeds. Select **Via Video directory** to select a feed from the services in the video directory.
- **Refresh feeds** — Refresh the content of all feeds.
- **Manage account** — Manage your account options for a particular feed, if available.

To view the videos available in a feed, select a feed from the list.

My videos

My videos is a storage place for all videos. You can list downloaded videos and video clips recorded with the device camera in separate views.

To open a folder and view video clips, select the folder. When a video clip is playing, to use the control keys for controlling the player, tap the screen.

To adjust the volume, press the volume key.

Select **Options** and from the following:

- **Resume download** — Resume a paused or failed download.
- **Cancel download** — Cancel a download.
- **Video details** — View information about a video clip.
- **Find** — Find a video clip. Enter a search text that matches the file name.
- **Memory status** — View the amount of free and used memory.
- **Sort by** — Sort video clips. Select the desired category.
- **Move and copy** — Move or copy video clips. Select **Copy** or **Move** and the desired location.

 © 2010 Nokia. All rights reserved.

Transfer videos from your PC

Transfer your own video clips from compatible devices using a compatible USB data cable. Only video clips which are in a format supported by your device are shown.

1. To view your device on a PC as a mass memory device where you can transfer any data files, connect using a USB data cable.
2. Select **Mass storage** as the connection mode. A compatible memory card needs to be inserted in the device.
3. Select the video clips you want to copy from your PC.
4. Transfer the video clips to **E:\My Videos** in the memory card.

   The transferred video clips appear in the My videos folder.

Video centre settings

In the Video centre main view, select **Options** > **Settings** and from the following:

- **Video service selection** — Select the video services that you want to appear in Video centre. You can also add, remove, edit, and view the details of a video service. You cannot edit preinstalled video services.
- **Connection settings** — To define the network destination used for the network connection, select **Network connection**. To select the connection manually each time Video centre opens a network connection, select **Always ask**.

  To set GPRS connection on or off, select **Confirm GPRS usage**.

  To set roaming on or off, select **Confirm roaming**.
- **Parental control** — Set an age limit to videos. The required password is the same as the device lock code. The factory setting for the lock code is **12345**. In video-on-demand services, videos which have the same or a higher age limit than you have set, are hidden.
- **Preferred memory** — Select whether downloaded videos are saved in the device memory or on a compatible memory card.
- **Thumbnails** — Select whether to download and view thumbnail images in video feeds.

© 2010 Nokia. All rights reserved.

13. Web browser

With the web browser, you can view hypertext markup language (HTML) pages on the web as originally designed (network service). You can also browse web pages that are designed specifically for mobile devices, and use extensible hypertext markup language (XHTML), or the wireless markup language (WML).

To browse the web, you need to have an internet access point defined in your device.

Tip: To open the browser, select the media key ( ) to open the media bar, and select .

Browse the web

Select **Menu** > **Internet** > **Web**.

To browse the web, select **Go to web address** from the toolbar, and enter a web address.

By default, the browser is in full screen mode. To exit full screen mode, double-tap the arrow icon in the bottom right corner.

Some web pages may contain material, such as graphics and sounds, that requires a large amount of memory to view. If your device runs out of memory while loading such a web page, the graphics on the page are not shown.

To browse web pages with graphics disabled, to save memory and increase the page loading speed, select **Options** > **Settings** > **Page** > **Load content** > **Text only**.

To enter a web address, select **Options** > **Go to** > **New web page**.

To refresh the content of the web page, select **Options** > **Web page options** > **Reload**.

To save the current web page as a bookmark, select **Options** > **Web page options** > **Save as bookmark**.

 © 2010 Nokia. All rights reserved.

To view snapshots of the web pages you have visited during the current browsing session, select **Back** (available if **History list** is activated in the browser settings and the current web page is not the first web page you visit).

To prevent or allow the automatic opening of multiple windows, select **Options** > **Web page options** > **Block pop-ups** or **Allow pop-ups**.

To zoom in on a web page, double-tap the display.

Tip: To minimise the browser without exiting the application or connection, press the end key once.

Browser toolbar

The browser toolbar helps you select frequently used functions of the browser.

From the toolbar, select from the following:

- **Expand toolbar** — Expand the toolbar to access more toolbar functions.
- **Go to web address** — Enter a new web address.
- **Show zoom** — Zoom in or out on the web page.

To use the expanded toolbar, select **Expand toolbar** and from the following:

- **Go to feeds** — View your current feed subscriptions.
- **Full screen** — Switch to the full screen view.
- **Subsc. feeds** — View a list of available web feeds on the current web page, and subscribe to a web feed.
- **Settings** — Edit the settings.
- **Save bkmrk.** — Save the current web page as a bookmark.
- **Reload** — Refresh the web page.
- **Overview** — View an overview of the current web page.
- **Homepage** — Go to the homepage (if defined in the settings).
- **Bookmarks** — Open the bookmarks view.
- **Find keywd.** — Search on the current web page.

© 2010 Nokia. All rights reserved.

Navigate pages

When you are browsing a web page that contains a large amount of information, you can use Page overview to view what kind of information the web page contains.

To see an overview of the current web page, open the toolbar, and select ☰ > ▣.

Web feeds and blogs

Web feeds are XML files on web pages that are used to share, for example, the latest news headlines or blogs. Blogs or weblogs are web diaries. It is common to find web feeds on web, blog, and wiki pages.

The web browser application automatically detects if a web page contains web feeds.

To subscribe to a web feed, select a feed and **Options** > **Subscribe to web feeds**.

To update a web feed, select a feed and **Options** > **Refresh**. You can also update web feeds from the Contacts bar.

To define how web feeds are updated, select **Options** > **Settings** > **Web feeds**.

Widgets

Your device supports widgets. Widgets are small, downloadable web applications that deliver multimedia, news feeds, and other information, such as weather reports, to your device. Installed widgets appear as separate applications in the Applications folder.

To find and download widgets, visit the Ovi Store at store.ovi.com.

You can also install widgets on a compatible memory card (if available).

The default access point for widgets is the same as in the web browser. When active in the background, some widgets may update information automatically to your device.

 © 2010 Nokia. All rights reserved.

Using widgets may involve the transmission of large amounts of data through your service provider's network. For information about data transmission charges, contact your service provider.

Content search

Select **Menu** > **Internet** > **Web**.

To search for text within the current web page, select **Options** > **Find keyword**.

To go to the next match, from the toolbar, select **Find next**.

To go to the previous match, from the toolbar, select **Find previous**.

Bookmarks

Select **Menu** > **Internet** > **Web**.

Select **Options** > **Go to** > **Bookmarks**. You can select web addresses from a list or from a collection of bookmarks in the Recently visited pages folder.

The toolbar helps you select frequently used functions of the browser.

From the toolbar, select from the following:

- **Add bookmark** — Add a new bookmark.
- **Go to web address** — Enter a new web address.
- **Delete** — Delete a bookmark.

To go to a new web page, select **Options** > **Go to** > **New web page**.

To send and add bookmarks, or to set a bookmark as the homepage, select **Options** > **Bookmark options**.

To edit, move, or delete bookmarks, select **Options** > **Bookmark manager**.

Empty the cache

The information or services you have accessed are stored in the cache memory of the device.

© 2010 Nokia. All rights reserved.

A cache is a memory location that is used to store data temporarily. If you have tried to access or have accessed confidential information requiring passwords, empty the cache after each use.

To empty the cache, select **Options** > **Clear privacy data** > **Cache**.

Connection security

If the security indicator ( ) is displayed during a connection, the data transmission between the device and the internet gateway or server is encrypted.

The security icon does not indicate that the data transmission between the gateway and the content server (where the data is stored) is secure. The service provider secures the data transmission between the gateway and the content server.

Security certificates may be required for some services, such as banking services. You are notified if the identity of the server is not authentic or if you do not have the correct security certificate in your device. For more information, contact your service provider.

Important: Even if the use of certificates makes the risks involved in remote connections and software installation considerably smaller, they must be used correctly in order to benefit from increased security. The existence of a certificate does not offer any protection by itself; the certificate manager must contain correct, authentic, or trusted certificates for increased security to be available. Certificates have a restricted lifetime. If "Expired certificate" or "Certificate not valid yet" is shown, even if the certificate should be valid, check that the current date and time in your device are correct.

Before changing any certificate settings, you must make sure that you really trust the owner of the certificate and that the certificate really belongs to the listed owner.

 © 2010 Nokia. All rights reserved.

14. Connectivity

Your device offers several options to connect to the internet or to another compatible device or PC.

Data connections and access points

Your device supports packet data connections (network service), such as GPRS in the GSM network.

To establish a data connection, an access point is required. You can define different kinds of access points, such as the following:

- MMS access point to send and receive multimedia messages
- Internet access point (IAP) to send and receive e-mail and connect to the internet

Check the type of access point you need with your service provider for the service you want to access. For availability and subscription to packet data connection services, contact your service provider.

Network settings

Select **Menu** > **Settings** and **Connectivity** > **Network**.

Select from the following:

- **Operator selection** — Select **Automatic** to set the device to search for and select one of the available networks, or **Manual** to manually select the network from a list. If the connection to the manually selected network is lost, the device sounds an error tone and asks you to reselect a network. The selected network must have a roaming agreement with your home network.
- **Cell info display** — Set the device to indicate when it is used in a cellular network based on microcellular network (MCN) technology and to activate cell info reception.

© 2010 Nokia. All rights reserved.

Access points

Create a new access point

Select **Menu** > **Settings** and **Connectivity** > **Destinations**.

You may receive access point settings in a message from a service provider. Some or all access points may be preset for your device by your service provider, and you may not be able to change, create, edit, or remove them.

When you open one of the access point groups (, , ,), you can see the access point types:

indicates a protected access point

indicates a packet data access point

To create a new access point, select **Access point**. The device asks to check for available connections. After the search, connections that are already available are shown and can be shared by a new access point. If you skip this step, you are asked to select a connection method and to define the settings needed.

To edit the settings of an access point, open one of the access point groups, and select an access point. Follow the instructions from your service provider.

- **Connection name** — Enter a name for the connection.
- **Data bearer** — Select the data connection type.

Depending on the data connection you select, only certain setting fields are available. Fill in all fields marked with **Must be defined** or with a red *. Other fields can be left empty, unless your service provider has instructed otherwise.

To use a data connection, your service provider must support this feature, and if necessary, activate it for your SIM card.

Create access point groups

Select **Menu** > **Settings** and **Connectivity** > **Destinations**.

Some applications allow you to use access point groups for network connections.

 © 2010 Nokia. All rights reserved.

To avoid selecting a single access point every time the device makes a network connection, you can create a group that contains various access points to connect to that network and define the order in which the access points are used.

To create a new access point group, select **Options** > **Manage** > **New destination**.

To add access points to an access point group, select the group and **Options** > **New access point**. To copy an existing access point from another group, select the group, tap the relevant access point if it is not already highlighted, and select **Options** > **Organise** > **Copy to other dest.**.

To change the priority of an access point within the group, select **Options** > **Organise** > **Change priority**.

Packet data access points

Select **Menu** > **Settings** and **Connectivity** > **Destinations** > **Access point**, and follow the instructions on the screen.

To edit a packet data access point, open one of the access point groups, and select an access point marked with .

Follow the instructions from your service provider.

Select from the following:

- **Access point name** — You obtain the access point name from your service provider.
- **User name** — The user name may be needed to make a data connection, and is usually provided by your service provider.
- **Prompt password** — If you must enter the password every time you log in to a server, or if you do not want to save your password in the device, select **Yes**.
- **Password** — A password may be needed to make a data connection and is usually provided by your service provider.
- **Authentication** — Select **Secure** to always send your password encrypted or **Normal** to send your password encrypted when possible.

© 2010 Nokia. All rights reserved.

- **Homepage** — Depending on the access point you are setting up, enter the web address or the address of the multimedia message centre.
- **Use access point** — Select **After confirmation** if you want the device to ask for confirmation before the connection using this access point is created, or **Automatically** if you want the device to connect to the destination using this access point automatically.

Select **Options** > **Advanced settings** and from the following:

- **Network type** — Select the internet protocol type to transfer data to and from your device. The other settings depend on the selected network type.
- **Phone IP address** (for IPv4 only) — Enter the IP address of your device.
- **DNS addresses** — Enter the IP addresses of the primary and secondary DNS servers, if required by your service provider. To obtain these addresses, contact your internet service provider.
- **Proxy server address** — Enter the address of the proxy server.
- **Proxy port number** — Enter the port number of the proxy server.

Active data connections

Select **Menu** > **Settings** and **Connectivity** > **Connection mgr.**.

In the active data connections view, you can see open data connections:

data calls

packet data connections

To end a connection, select **Options** > **Disconnect**.

To end all open connections, select **Options** > **Disconnect all**.

To view the details of a connection, select **Options** > **Details**.

Synchronisation

Select **Menu** > **Settings** and **Connectivity** > **Data transfer** > **Sync**.

 © 2010 Nokia. All rights reserved.

The Synchronisation application enables you to synchronise your notes, calendar entries, text and multimedia messages, browser bookmarks, or contacts with various compatible applications on a compatible computer or on the internet.

You may receive synchronisation settings in a special message from your service provider.

A synchronisation profile contains the necessary settings for synchronisation.

When you open the application, the default or previously used synchronisation profile is displayed. To modify the profile, tap a synchronisation item to include it in the profile or to leave it out.

To manage synchronisation profiles, select **Options** and the desired option.

To synchronise data, select **Options** > **Synchronise**. To cancel synchronisation before it finishes, select **Cancel**.

Bluetooth connectivity

About Bluetooth connectivity

With Bluetooth connectivity, you can make a wireless connection to other compatible devices, such as mobile devices, computers, headsets, and car kits.

You can use the connection to send images, video and sound clips, and notes, transfer files from your compatible PC, and print images with a compatible printer.

Since devices with Bluetooth wireless technology communicate using radio waves, they do not need to be in direct line-of-sight. However, they must be within 10 metres (33 feet) of each other, although the connection may be subject to interference from obstructions such as walls or from other electronic devices.

This device is compliant with Bluetooth Specification 2.0 + EDR supporting the following profiles: advanced audio distribution, audio/video remote control, basic imaging, device identification, dial-up networking, file transfer, generic audio/video distribution, hands-free, headset, object push, phone book access, SIM access, and stereo audio streaming. To ensure interoperability between other devices supporting Bluetooth technology, use Nokia approved accessories for this model.

© 2010 Nokia. All rights reserved.

Check with the manufacturers of other devices to determine their compatibility with this device.

Features using Bluetooth technology increase the demand on battery power and reduce the battery life.

When the device is locked, only connections to authorised devices are possible.

Settings

Select **Menu** > **Settings** and **Connectivity** > **Bluetooth**.

When you open the application for the first time, you are asked to define a name for your device. You can change the name later.

Select from the following:

- **Bluetooth** — Turn Bluetooth connectivity on or off.
- **My phone's visibility** — To allow your device to be found by other devices with Bluetooth wireless technology, select **Shown to all**. To set a time period after which the visibility is set from shown to hidden, select **Set visibility period**. To hide your device from other devices, select **Hidden**.
- **My phone's name** — Edit the name shown to other devices with Bluetooth wireless technology.
- **Remote SIM mode** — Enable or disable another device, such as a compatible car kit accessory, to use the SIM card in your device to connect to the network.

Security tips

Select **Menu** > **Settings** and **Connectivity** > **Bluetooth**.

When you are not using Bluetooth connectivity, to control who can find your device and connect to it, select **Bluetooth** > **Off** or **My phone's visibility** > **Hidden**. Deactivating Bluetooth connectivity does not affect other functions of the device.

Do not pair with or accept connection requests from an unknown device. This helps to protect your device from harmful content. Operating the device in hidden mode is a safer way to avoid malicious software.

 © 2010 Nokia. All rights reserved.

Send data using Bluetooth connectivity

Several Bluetooth connections can be active at a time. For example, if you are connected to a compatible headset, you can also transfer files to another compatible device at the same time.

1. Open the application where the item you want to send is stored.
2. Tap an item, and select **Options** > **Send** > **Via Bluetooth**.

   Devices with Bluetooth wireless technology that are within range are displayed. Device icons are as follows:

   computer

   phone

   audio or video device

   other device

   To interrupt the search, select **Stop**.
3. Select the device with which you want to connect.
4. If the other device requires pairing before data can be transmitted, a tone sounds, and you are asked to enter a passcode. The same passcode must be entered in both devices.

   When the connection is established, **Sending data** is displayed.

Tip: When searching for devices, some devices may show only the unique address (device address). To find the unique address of your device, enter ***#2820#**.

Pair devices

Select **Menu** > **Settings** and **Connectivity** > **Bluetooth**.

To pair with compatible devices and view your paired devices, open the **Paired devices** tab.

© 2010 Nokia. All rights reserved.

Before pairing, create your own passcode (1 to 16 digits), and agree with the owner of the other device to use the same code. Devices that do not have a user interface have a factory-set passcode. The passcode is used only once.

1. To pair with a device, select **Options** > **New paired device**. Devices that are within range are displayed.
2. Select the device, and enter the passcode. The same passcode must be entered on the other device, as well.
3. Some audio accessories connect automatically to your device after pairing. Otherwise, to connect to an accessory, select **Options** > **Connect to audio device**.

Paired devices are indicated by in the device search.

To set a device as authorised or unauthorised, select from the following:

- **Set as authorised** — Connections between your device and the authorised device can be made without your knowledge. You will not be asked for authorisation or acceptance separately. Use this status only for your own devices, such as your compatible headset or PC, or devices that belong to someone you trust. indicates authorised devices in the paired devices view.
- **Set as unauthorised** — Connection requests from this device must be accepted separately every time.

To cancel a pairing with a device, select **Options** > **Delete**.

To cancel all pairings, select **Options** > **Delete all**.

Receive data using Bluetooth connectivity

When you receive data through Bluetooth connectivity, a tone sounds, and you are asked if you want to accept the message. If you accept, is displayed, and the item is placed in the Inbox folder in Messaging. Messages received through Bluetooth connectivity are indicated by .

Block devices

Select **Menu** > **Settings** and **Connectivity** > **Bluetooth**.

 © 2010 Nokia. All rights reserved.

To block a device from establishing a Bluetooth connection to your device, open the **Paired devices** tab. Tap a device you want to block, if it is not already highlighted, and select **Options** > **Block**.

To unblock a device, open the **Blocked devices** tab, tap a device, if it is not already highlighted, and select **Options** > **Delete**.

To unblock all blocked devices, select **Options** > **Delete all**.

If you reject a pairing request from another device, you are asked if you want to block all future connection requests from this device. If you accept the query, the remote device is added to the list of blocked devices.

Remote SIM mode

Select **Menu** > **Settings** and **Connectivity** > **Bluetooth**.

Before the remote SIM mode can be activated, the two devices must be paired and the pairing initiated from the other device. When pairing, use a 16-digit passcode, and set the other device as authorised.

To use the remote SIM mode with a compatible car kit accessory, activate Bluetooth connectivity, and enable the use of the remote SIM mode with your device. Activate the remote SIM mode from the other device.

When the remote SIM mode is on in your device, **Remote SIM mode** is displayed in the home screen. The connection to the wireless network is turned off, as indicated by ✕ in the signal strength indicator area, and you cannot use SIM card services or features requiring cellular network coverage.

When the wireless device is in the remote SIM mode, you can only use a compatible connected accessory, such as a car kit, to make or receive calls. Your wireless device will not make any calls while in this mode, except to the emergency numbers programmed into your device. To make calls from your device, you must leave the remote SIM mode. If the device is locked, enter the lock code to unlock it.

To leave the remote SIM mode, press the power key, and select **Exit remote SIM mode**.

© 2010 Nokia. All rights reserved.

USB

Select **Menu** > **Settings** and **Connectivity** > **USB**.

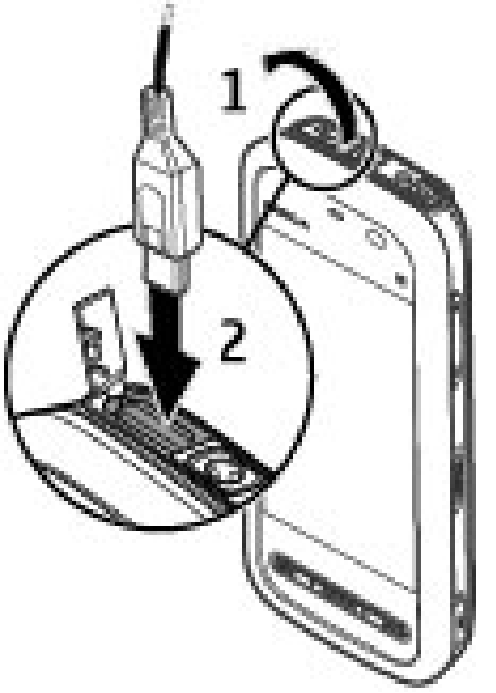

To have the device ask the purpose of the connection each time a compatible data cable is connected, select **Ask on connection** > **Yes**.

If the **Ask on connection** option is deactivated or you want to change the mode during an active connection, select **USB connection mode** and from the following:

- **PC Suite** — Use Nokia PC applications such as Nokia Ovi Suite, and Nokia Software Updater.
- **Mass storage** — Transfer data between your device and a compatible PC.
- **Image transfer** — Print images with a compatible printer.
- **Media transfer** — Synchronise music with Nokia Ovi Player or Windows Media Player.

PC connections

You can use your mobile device with a variety of compatible PC connectivity and data communications applications. With Nokia Ovi Suite you can, for example, transfer files and images between your device and a compatible computer.

To use Ovi Suite with USB connection mode, select **PC Suite mode**.

For more information about Ovi Suite, see the support area at www.ovi.com.

Administrative settings

Select **Menu** > **Settings** and **Connectivity** > **Admin. settings**.

Packet data settings

Select **Menu** > **Settings** and **Connectivity** > **Admin. settings** > **Packet data**.

© 2010 Nokia. All rights reserved.

The packet data settings affect all access points using a packet data connection.

Select from the following:

- **Packet data connection** — If you select **When available** and you are in a network that supports packet data, the device registers to the packet data network. Starting an active packet data connection (for example, to send and receive e-mail) is quicker than if the device establishes a packet data connection when needed. If there is no packet data coverage, the device periodically tries to establish a packet data connection. If you select **When needed**, the device uses a packet data connection only if you start an application or action that needs it.
- **Access point** — The access point name is needed to use your device as a packet data modem to a compatible computer.

15. Search

About Search

Select **Menu** > **Internet** > **Search**.

Search (network service) enables you to use various internet-based search services to find, for example, websites and images. The content and availability of the services may vary.

Start a search

Select **Menu** > **Internet** > **Search**.

To search the contents of your mobile device, enter search terms in the search field, or browse the content categories. While you enter the search terms, the results are organised into categories. The most recently accessed results appear at the top of the result list, if they match your search terms.

To search for web pages on the internet, select **Search the Internet**, a search provider, and enter your search terms in the search field. The search provider you selected is set as your default internet search provider.

© 2010 Nokia. All rights reserved.

If a default search provider is already set, select it to start a search, or select **More search services** to use another search provider.

To change the default service provider, select **Options** > **Select service**.

To change the country or region setting to find more search providers, select **Options** > **Settings** > **Country or region**.

16. About Ovi Store

In Ovi Store, you can download mobile games, applications, videos, images, and ringing tones to your device. Some of the items are free of charge; others you need to purchase with your credit card or through your phone bill. Ovi Store offers you content that is compatible with your mobile device and relevant to your tastes and location.

17. Other applications

Clock

Set time and date

Select **Menu** > **Applications** > **Clock**.

Select **Options** > **Settings** and from the following:

- **Time** — Set the time.
- **Date** — Set the date.
- **Automatic time update** — Set the network to automatically update the time, date, and time zone information for your device (network service).

Alarm clock

Select **Menu** > **Applications** > **Clock**.

To set a new alarm, select **New alarm**. Set the alarm time. Select **Repeat** to set whether and when the alarm is repeated, and select **Done**.

 © 2010 Nokia. All rights reserved.

To view your active and inactive alarms, select **Alarms**. When the alarm is active, is displayed. When the alarm is repeated, is displayed.

To remove an alarm, select **Alarms**, scroll to the alarm, and select **Options** > **Remove alarm**.

To turn off the alarm when the alarm expires, select **Stop**. To snooze the alarm, select **Snooze**. If your device is switched off when an alarm expires, your device switches itself on and starts sounding the alarm tone.

To define the snooze time, select **Options** > **Settings** > **Alarm snooze time**.

To change the alarm tone, select **Options** > **Settings** > **Clock alarm tone**.

World clock

Select **Menu** > **Applications** > **Clock**.

To view the current time in different locations, select **World clock**. To add locations to the list, select **Options** > **Add location**.

To set your current location, scroll to a location, and select **Options** > **Set as current location**. The time in your device is changed according to the selected location. Ensure that the time is correct and matches your time zone.

Calendar

To open the calendar, select **Menu** > **Calendar**.

Calendar views

To switch between the month, week, day, and to-do note views, select **Options** > **Change view** and the desired view.

To change the starting day of the week or the view that is displayed when you open the calendar, or to modify calendar alarm settings, select **Options** > **Settings**.

To go to a certain date, select **Options** > **Go to date**.

© 2010 Nokia. All rights reserved.

Calendar toolbar

From the toolbar, select from the following:

- **Next view** — Select the month view.
- **Next view** — Select the week view.
- **Next view** — Select the day view.
- **Next view** — Select the to-do view.
- **New meeting** — Add a new meeting reminder.
- **New to-do note** — Add a new to-do note.

File manager

About File manager

Select **Menu** > **Applications** > **Office** > **File mgr.**.

With File manager, you can browse, manage, and open files on your device, memory card, or a compatible external drive.

The available options depend on the memory you select.

Find and organise files

Select **Menu** > **Applications** > **Office** > **File mgr.**.

To find a file, select **Options** > **Find**. Enter a search text that matches the file name.

To move and copy files and folders, or to create new folders in the memory, select **Options** > **Organise** and the desired option.

To sort files, select **Options** > **Sort by** and the desired category.

Edit memory card

Select **Menu** > **Applications** > **Office** > **File mgr.**.

These options are available only if a compatible memory card is inserted in the device.

Select **Options** and from the following:

 © 2010 Nokia. All rights reserved.

- **Memory card options** — Rename or format a memory card.
- **Memory card password** — Password protect a memory card.
- **Unlock memory card** — Unlock a memory card.

Back up files on a memory card

Select **Menu** > **Applications** > **Office** > **File mgr.**.

To back up files, select the file types you want to back up on a memory card and **Options** > **Back up now**. Ensure that your memory card has enough free memory for the files that you have chosen to back up.

Application manager

About Application manager

Select **Menu** > **Settings** and **Application mgr.**.

With Application manager, you can see the software packages installed in your device. You can view details of installed applications, remove applications, and define installation settings.

You can install the following types of applications and software to your device:

- JME applications based on Java™ technology with the .jad or .jar file extensions
- Other applications and software suitable for the Symbian operating system with the .sis or .sisx file extensions
- Widgets with the .wgz file extension

Only install software that is compatible with your device.

Install applications

You can transfer installation files to your device from a compatible computer, download them during browsing, or receive them in a multimedia message, as an e-mail attachment, or using other connectivity methods, such as Bluetooth connectivity.

© 2010 Nokia. All rights reserved.

Other applications

You can use Nokia Application Installer in Nokia Ovi Suite to install an application to your device.

Icons in Application manager indicate the following:

SIS or SISX application

Java application

widgets

application installed on the memory card

Important: Only install and use applications and other software from trusted sources, such as applications that are Symbian Signed or have passed the Java Verified™ testing.

Before installation, note the following:

- To view the application type, version number, and the supplier or manufacturer of the application, select **Options** > **View details**.

  To view the security certificate details of the application, select **Details:** > **Certificates:** > **View details**. Control the use of digital certificates in Certificate management.
- If you install a file that contains an update or repair to an existing application, you can only restore the original application if you have the original installation file or a full backup copy of the removed software package. To restore the original application, remove the application, and install the application again from the original installation file or the backup copy.

  The JAR file is required for installing Java applications. If it is missing, the device may ask you to download it. If there is no access point defined for the application, you are asked to select one.

To install an application, do the following:

 © 2010 Nokia. All rights reserved.

1. To locate an installation file, select **Menu** > **Settings** and **Application mgr.**. Alternatively, search installation files using File manager, or select **Messaging** > **Inbox**, and open a message that contains an installation file.
2. In Application manager, select **Options** > **Install**. In other applications, select the installation file to start the installation.

   During installation, the device shows information about the progress of the installation. If you install an application without a digital signature or certification, the device displays a warning. Continue installation only if you are sure of the origin and contents of the application.

To start an installed application, locate the application in the menu, and select the application. If the application does not have a default folder defined, it is installed in the Installed apps. folder in the main menu.

To see which software packages are installed or removed and when, select **Options** > **View log**.

Important: Your device can only support one antivirus application. Having more than one application with antivirus functionality could affect performance and operation or cause the device to stop functioning.

After you install applications to a compatible memory card, installation files (.sis, .sisx) remain in the device memory. The files may use large amounts of memory and prevent you from storing other files. To maintain sufficient memory, use Nokia Ovi Suite to back up installation files to a compatible PC, then use the file manager to remove the installation files from the device memory. If the .sis file is a message attachment, delete the message from the Messaging inbox.

Remove applications

Select **Menu** > **Settings** and **Application mgr.**.

To remove a software package, select **Installed apps.** > **Options** > **Uninstall**. Select **Yes** to confirm.

© 2010 Nokia. All rights reserved.

If you remove software, you can only reinstall it if you have the original software package or a full backup of the removed software package. If you remove a software package, you may no longer be able to open documents created with that software.

If another software package depends on the software package that you removed, the other software package may stop working. Refer to the documentation of the installed software package for details.

Application manager settings

Select **Menu** > **Settings** and **Application mgr.**.

Select **Installation settings** and from the following:

- **Software installation** — Select whether Symbian software that has no verified digital signature can be installed.
- **Online certificate check** — Select to check the online certificates before installing an application.
- **Default web address** — Set the default web address used when checking online certificates.

RealPlayer

With RealPlayer, you can play video clips or stream media files over the air without saving them to the device first.

RealPlayer does not necessarily support all file formats or all the variations of file formats.

Select **Menu** > **Applications** > **RealPlayer**.

RealPlayer toolbar

In the Video clips, Streaming links, and Recently played views, the following toolbar icons may be available:

- **Send** — Send a video clip or streaming link.
- **Play** — Play the video clip or video stream.

 © 2010 Nokia. All rights reserved.

- **Delete** — Delete the video clip or streaming link.
- **Remove** — Remove a file from the recently played list.

Play video clips

Select **Menu** > **Applications** > **RealPlayer**.

To play a video clip, select **Video clips**, and a clip.

To list recently played files, in the application main view, select **Recently played**.

In the list of video clips, scroll to a clip, select **Options** and from the following:

- **Use video clip** — Assign a video to a contact or set it as a ringing tone.
- **Mark/Unmark** — Mark items in the list to send or delete multiple items at the same time.
- **View details** — View details of the selected item, such as format, resolution, and duration.
- **Settings** — Edit settings for video playback and streaming.

In the Video clips, Recently played and Streaming links views, the following toolbar icons may be available:

- **Send** — Send a video clip or streaming link.
- **Play** — Play the video clip or video stream.
- **Delete** — Delete the video clip or streaming link.
- **Remove** — Remove a file from the recently played list.

Stream content over the air

In RealPlayer, you can only open an RTSP link. However, RealPlayer plays a RAM file if you open an HTTP link to it in a browser.

Select **Menu** > **Applications** > **RealPlayer**.

To stream content over the air (network service), select **Streaming links** and a link. You can also receive a streaming link in a text message or multimedia message, or open a link on a web page. Before live content begins streaming, your device

© 2010 Nokia. All rights reserved.

connects to the site and starts loading the content. The content is not saved in your device.

Recorder

Select **Menu** > **Music** > **Recorder**.

With the Recorder application, you can record voice memos and telephone conversations.

The recorder cannot be used when a data call or GPRS connection is active.

To record a sound clip, select ●.

To stop recording a sound clip, select ■.

To listen to the sound clip, select ▶.

To select the recording quality or where you want to save your sound clips, select **Options** > **Settings**.

To record a telephone conversation, open recorder during a voice call, and select ●. Both parties hear a tone at regular intervals during recording.

Write notes

Select **Menu** > **Applications** > **Office** > **Notes**. To write a note, select **Options** > **New note**. Tap the note field to enter text, and select ✓.

You can save plain text files (.txt file format) you receive to Notes.

Make calculations

Select **Menu** > **Applications** > **Office** > **Calculator**.

This calculator has limited accuracy and is designed for simple calculations.

To make a calculation, enter the first number of the calculation. Select a function such as add or subtract. Enter the second number of the calculation, and select **=**.

 © 2010 Nokia. All rights reserved.

Converter

With Converter, you can convert measures from one unit to another.

The converter has limited accuracy, and rounding errors may occur.

Select **Menu** > **Applications** > **Office** > **Converter**.

Dictionary

Select **Menu** > **Applications** > **Office** > **Dictionary**.

To translate words from one language to another, enter text in the search field. As you enter text, suggestions of words to translate are displayed. To translate a word, select the word from the list. All languages may not be supported.

Select **Options** and from the following:

- **Listen** — Listen to the selected word.
- **History** — Find previously translated words from the current session.
- **Languages** — Change the source or target language, download languages from the internet, or remove a language from the dictionary. You cannot remove the English language from the dictionary. You can have two additional languages installed, besides English.

18. Settings

Some settings may be preset for the device by your service provider, and you may not be able to change them.

Phone settings

Date and time settings

Select **Menu** > **Settings** and **Phone** > **Date and time**.

Select from the following:

- **Time** — Enter the current time.

© 2010 Nokia. All rights reserved.

- **Time zone** — Select your location.
- **Date** — Enter the date.
- **Date format** — Select the date format.
- **Date separator** — Select the symbol that separates days, months, and years.
- **Time format** — Select the time format.
- **Time separator** — Select the symbol that separates hours and minutes.
- **Clock type** — Select the clock type.
- **Clock alarm tone** — Select the tone for the alarm clock.
- **Alarm snooze time** — Adjust the snooze time.
- **Workdays** — Select your working days. You can then set an alarm only for working day mornings, for example.
- **Automatic time update** — To update the time, date, and time zone, select **On**. This network service may not be available on all networks.

Language settings

Select **Menu** > **Settings** and **Phone** > **Language**.

To change the device language, select **Phone language**.

To change the writing language, select **Writing language**.

To turn predictive text input on or off, select **Predictive text**.

Display settings

Select **Menu** > **Settings** and **Phone** > **Display**.

Select from the following:

- **Brightness** — Adjust the brightness of your device display.
- **Font size** — Select the size of text and icons on the display.
- **Welcome note / logo** — Set a note or image to be displayed when you switch on the device.
- **Light time-out** — Set how long the light stays on when you stop using the device.

 © 2010 Nokia. All rights reserved.

Voice commands

To activate enhanced voice commands, to start applications and profiles, press and hold the call key in the home screen.

To control your device with enhanced voice commands, press and hold the call key in the home screen, and say a voice command. The voice command is the name of the application or profile displayed in the list.

Select **Menu** > **Settings** and **Phone** > **Voice commands**.

Select **Options** and from the following:

- **Change command** — Edit the voice commands.
- **Playback** — Listen to the synthesised voice tag.
- **Remove voice command** — Remove a voice command that you added manually.
- **Settings** — Adjust the settings.
- **Voice command tutorial** — Open the tutorial for voice commands.

Accessory settings

Select **Menu** > **Settings** and **Phone** > **Accessories**.

Some accessory connectors indicate which type of accessory is connected to the device.

Select an accessory and from the following:

- **Default profile** — Set the profile that you want activated each time you connect a certain compatible accessory to your device.
- **Automatic answer** — Select whether you want the device to answer an incoming call automatically after 5 seconds. If the ringing type is set to **Beep once** or **Silent**, automatic answer is disabled.
- **Lights** — Set whether lights remain on after the time-out.

The available settings depend on the type of accessory.

Application settings

Select **Menu** > **Settings** and **Phone** > **Application sett.**.

© 2010 Nokia. All rights reserved.

In application settings, you can edit the settings of some of the applications in your device.

To edit the settings, you can also select **Options** > **Settings** in each application.

Device updates

Select **Menu** > **Settings** and **Phone** > **Phone mgmt.** > **Device updates**.

With Device updates, you can connect to a server and receive configuration settings for your device, create new server profiles, view existing software version and device information, or view and manage existing server profiles.

You may receive server profiles and different configuration settings from your service providers and company information management department. These configuration settings may include connection and other settings used by different applications in your device.

To connect to the server and receive configuration settings for your device, select **Options** > **Server profiles**, a profile, and **Options** > **Start configuration**.

To create a server profile, select **Options** > **Server profiles** > **Options** > **New server profile**.

To delete a server profile, select the profile and **Options** > **Delete**.

Security settings

Phone and SIM

Select **Menu** > **Settings** and **Phone** > **Phone mgmt.** > **Security** > **Phone and SIM card**.

Select from the following:

- **PIN code request** — When active, the code is requested each time the device is switched on. Deactivating the PIN code request may not be allowed by some SIM cards.
- **PIN code** and**PIN2 code** — Change the PIN and PIN2 code. These codes can only include numbers. Avoid using access codes similar to the emergency numbers to prevent accidental dialling of the emergency number. If you forget the PIN or

 © 2010 Nokia. All rights reserved.

PIN2 code, contact your service provider. If you forget the lock code, contact a Nokia Care point or your service provider.

- **Lock code** — The lock code is used to unlock the device. To avoid unauthorised use of your device, change the lock code. The preset code is 12345. The new code can be 4-255 characters long. Alphanumeric characters and both uppercase and lowercase characters can be used. The device notifies you if the lock code is not properly formatted. Keep the new code secret and separate from your device.
- **Phone autolock period** — To avoid unauthorised use, you can set a time-out after which the device automatically locks. A locked device cannot be used until the correct lock code is entered. To turn off autolock, select **None**.
- **Lock if SIM card changed** — Set the device to ask for the lock code when an unknown SIM card is inserted into your device. The device maintains a list of SIM cards that are recognised as the owner's cards.
- **Remote phone locking** — Enable or disable remote lock.
- **Closed user group** — Specify a group of people to whom you can call and who can call you (network service).
- **Confirm SIM services** — Set the device to display confirmation messages when you are using a SIM card service (network service).

Certificate management

Select **Menu** > **Settings** and **Phone** > **Phone mgmt.** > **Security** > **Certificate management**.

Digital certificates should be used if you want to connect to an online bank or another site or remote server for actions that involve transferring confidential information. They should also be used if you want to reduce the risk of viruses or other malicious software and be sure of the authenticity of software when downloading and installing software.

Select from the following:

- **Authority certificates** — View and edit authority certificates.
- **Trusted site certificates** — View and edit trusted site certificates.
- **Personal certificates** — View and edit personal certificates.
- **Phone certificates** — View and edit device certificates.

© 2010 Nokia. All rights reserved.

Digital certificates do not guarantee safety; they are used to verify the origin of software.

Important: Even if the use of certificates makes the risks involved in remote connections and software installation considerably smaller, they must be used correctly in order to benefit from increased security. The existence of a certificate does not offer any protection by itself; the certificate manager must contain correct, authentic, or trusted certificates for increased security to be available. Certificates have a restricted lifetime. If "Expired certificate" or "Certificate not valid yet" is shown, even if the certificate should be valid, check that the current date and time in your device are correct.

View certificate details — check authenticity

You can only be sure of the correct identity of a server when the signature and the validity period of a server certificate have been checked.

You are notified if the identity of the server is not authentic or if you do not have the correct security certificate in your device.

To check the details of a certificate, select **Options** > **Certificate details**. The validity of the certificate is checked, and one of the following notes may be displayed:

- **Certificate not trusted** — You have not set any application to use the certificate.
- **Expired certificate** — The certificate validity period has ended.
- **Certificate not valid yet** — The certificate validity period has not yet begun.
- **Certificate corrupted** — The certificate cannot be used. Contact the certificate issuer.

Change the trust settings

Before changing any certificate settings, you must make sure that you really trust the owner of the certificate and that the certificate really belongs to the listed owner.

To change the settings for an authority certificate, select **Options** > **Trust settings**. Depending on the certificate, a list of the applications that can use the selected certificate is shown. For example:

 © 2010 Nokia. All rights reserved.

- **Symbian installation**: **Yes** — The certificate is able to certify the origin of a new Symbian operating system application.
- **Internet**: **Yes** — The certificate is able to certify servers.
- **App. installation**: **Yes** — The certificate is able to certify the origin of a new Java application.

To change the value, select **Options** > **Change trust setting**.

Security module

Select **Menu** > **Settings** and **Phone** > **Phone mgmt.** > **Security** > **Security module**.

To view or edit a security module (if available), select it from the list.

To view detailed information about a security module, select **Options** > **Security details**.

Restore original settings

Select **Menu** > **Settings** and **Phone** > **Phone mgmt.** > **Factory settings**.

You can reset some of the settings to their original values. To do this, you need the lock code.

After resetting, the device may take a longer time to power on. Documents and files are unaffected.

Protected content

To manage digital rights licences, select **Menu** > **Settings** and **Phone** > **Phone mgmt.** > **Security** > **Protected content**.

Digital rights management

Content owners may use different types of digital rights management (DRM) technologies to protect their intellectual property, including copyrights. This device uses various types of DRM software to access DRM-protected content. With this device you can access content protected with WMDRM 10, OMA DRM 1.0, and OMA DRM 2.0. If certain DRM software fails to protect the content, content owners may

© 2010 Nokia. All rights reserved.

ask that such DRM software's ability to access new DRM-protected content be revoked. Revocation may also prevent renewal of such DRM-protected content already in your device. Revocation of such DRM software does not affect the use of content protected with other types of DRM or the use of non-DRM-protected content.

Digital rights management (DRM) protected content comes with an associated activation key that defines your rights to use the content.

If your device has WMDRM-protected content, both the activation keys and the content will be lost if the device memory is formatted. You may also lose the activation keys and the content if the files on your device get corrupted. Losing the activation keys or the content may limit your ability to use the same content on your device again. For more information, contact your service provider.

Some activation keys may be connected to a specific SIM card, and the protected content can be accessed only if the SIM card is inserted in the device.

Notification lights

Select **Menu** > **Settings** and **Phone** > **Notification lights**.

To turn the standby breathing light on or off, select **Standby br. light**. When the standby breathing light is turned on, the menu key lights up periodically.

To turn the notification light on or off, select **Notification light**. When the notification light is turned on, the menu key lights up for a period you define to notify of missed events, such as missed calls or unread messages.

Call settings

Call settings

Select **Menu** > **Settings**. Select **Calling** > **Call** and from the following:

- **Send my caller ID** — Select **Yes** to show your phone number to the person you are calling. To use the setting agreed upon with your service provider, select **Set by network**) (network service).
- **Call waiting** — Activate your device to notify you of incoming calls while you are in a call (network service), or check whether the function is activated.

 © 2010 Nokia. All rights reserved.

- **Reject call with message** — Activate rejecting a call with a text message to inform the caller why you could not answer the call.
- **Message text** — Write the standard text message that is sent when you reject a call.
- **Automatic redial** — Set your device to make a maximum of 10 attempts to connect the call after an unsuccessful call attempt. To stop automatic redialling, press the end key.
- **Show call duration** — Set the length of a call to be displayed during the call.
- **Summary after call** — Set the length of a call to be displayed after the call.
- **Speed dialling** — Activate speed dialling.
- **Anykey answer** — Activate anykey answer.
- **Line in use** — This setting (network service) is shown only if the SIM card supports two subscriber numbers, that is, two phone lines. Select which phone line you want to use for making calls and sending text messages. Calls on both lines can be answered irrespective of the selected line. If you select **Line 2** and have not subscribed to this network service, you are not able to make calls. When line 2 is selected, 2 is shown in the home screen.
- **Line change** — Select to prevent line selection (network service), if supported by your SIM card. To change this setting, you need the PIN2 code.

Call divert

Select **Menu** > **Settings** and **Calling** > **Call divert**.

Call divert allows you to divert incoming calls to your voice mailbox or another phone number. For details, contact your service provider.

1. Select the type of calls to divert and a diverting option. For example, to divert all voice calls, select **Voice calls** > **All voice calls**.
2. To activate call divert, select **Activate**.
3. To divert calls to your voice mailbox, select **To voice mailbox**.
4. To divert calls to another phone number, select **To other number**, and enter the number, or select **Find** to retrieve a number saved in the contacts list.

© 2010 Nokia. All rights reserved.

Several diverting options can be active at the same time. When all calls are diverted, is displayed in the home screen.

Call barring

Call barring (network service) allows you to restrict the calls that you make or receive with the device. For example, you can restrict all outgoing international calls or incoming calls when you are abroad. To change the settings, you need the barring password from your service provider.

Select **Menu** > **Settings** and **Calling** > **Call barring**.

When security features that restrict calls are in use (such as call barring, closed user group, and fixed dialling), calls may be possible to the official emergency number programmed into your device. Call barring and call diverting cannot be active at the same time.

Voice call barring

Select the desired barring option and **Activate**, **Deactivate**, or **Check status**. Call barring affects all calls, including data calls.

19. Troubleshooting

To view frequently asked questions about your device, see the product support pages at www.nokia.com/support.

Q: What is my password for the lock, PIN, or PUK codes?

A: The default lock code is 12345. If you forget the lock code, contact your device dealer. If you forget a PIN or PUK code, or if you have not received such a code, contact your network service provider. For information about passwords, contact your access point provider, for example, a commercial internet service provider (ISP) or network service provider.

 © 2010 Nokia. All rights reserved.

Q: How do I close an application that is not responding?

A: Press and hold the menu key. Select and hold the application icon, and select **Exit**.

Q: Why do images look smudgy?

A: Ensure that the camera lens protection windows are clean.

Q: Why do missing, discoloured, or bright dots appear on the screen every time I switch on my device?

A: This is a characteristic of this type of display. Some displays may contain pixels or dots that remain on or off. This is normal, not a fault.

Q: Why can’t I find my friend’s device while using Bluetooth connectivity?

A: Check that both devices are compatible, have activated Bluetooth connectivity, and are not in hidden mode. Check also that the distance between the two devices is not over 10 metres (33 feet) and that there are no walls or other obstructions between the devices.

Q: Why can’t I end a Bluetooth connection?

A: If another device is connected to your device, you can end the connection from the other device or deactivate Bluetooth connectivity in your device. Select **Menu** > **Settings** and **Connectivity** > **Bluetooth** > **Bluetooth** > **Off**.

Q: What do I do if the memory is full?

A: Delete items from the memory. If **Not enough memory to perform operation. Delete some data first.** or **Memory low. Delete some data from phone memory.** is displayed when you are deleting several items at the same time, delete items one by one, beginning with the smallest items.

Q: Why can’t I select a contact for my message?

A: The contact card does not have a phone number, address, or e-mail address. Select **Menu** > **Contacts** and the relevant contact, and edit the contact card.

© 2010 Nokia. All rights reserved.

Q: How can I end the data connection when the device starts a data connection again and again?

A: The device may be trying to retrieve a multimedia message from the multimedia message centre. To stop the device from making a data connection, select **Menu** > **Messaging** and **Options** > **Settings** > **Multimedia message** > **Multimedia retrieval**. Select **Manual** to have the multimedia messaging centre save messages to be retrieved later, or **Off** to ignore all incoming multimedia messages. If you select **Manual**, you receive a notification when you have a new message in the multimedia message centre. If you select **Off**, the device does not make any network connections related to multimedia messaging. To set the device to use a packet data connection only if you start an application or action that needs it, select **Menu** > **Settings** and **Connectivity** > **Admin. settings** > **Packet data** > **Packet data connection** > **When needed**. If this does not help, switch the device off and then on again.

Q: Can I use my Nokia device as a fax modem with a compatible PC?

A: You cannot use your device as a fax modem. However, with call diverting (network service), you can divert incoming fax calls to a fax number.

Q: How do I calibrate the screen?

A: The screen is calibrated at the factory. If it is necessary to recalibrate the screen, select **Menu** > **Settings** and **Phone** > **Touch input** > **Touch screen calibration**. Follow the instructions.

Q: Why do I get the error message Expired certificate or Certificate not valid yet when I am installing a downloaded application?

A: If **Expired certificate** or **Certificate not valid yet** is displayed, even if the certificate should be valid, check that the current date and time in your device are correct. You may have skipped the setting of date and time when starting the device for the first time, or the mobile network may have failed to update these settings to your device. To resolve this, select **Menu** > **Settings** and **Phone** > **Phone mgmt.** > **Factory settings**. Restore the factory settings, and when the device restarts, set the correct date and time.

 © 2010 Nokia. All rights reserved.

20. Green tips

Here are tips on how you can contribute to protecting the environment.

Save energy

When you have fully charged the battery and disconnected the charger from the device, unplug the charger from the wall outlet.

You do not need to charge your battery so often if you do the following:

- Close and disable applications, services, and connections when not in use.
- Decrease the brightness of the screen.
- Set the device to enter the power saver mode after the minimum period of inactivity, if available in your device.
- Disable unnecessary sounds, such as keypad and ringing tones.

Recycle

Most of the materials in a Nokia phone are recyclable. Check how to recycle your Nokia products at www.nokia.com/werecycle, or with a mobile device, www.nokia.mobi/werecycle.

Recycle packaging and user guides at your local recycling scheme.

Save paper

This user guide helps you get started with your device. For more detailed instructions, open the in-device help (in most applications, select **Options** > **Help**). For further support, see www.nokia.com/support.

© 2010 Nokia. All rights reserved.

Learn more

For more information on the environmental attributes of your device, see www.nokia.com/ecodeclaration.

Product and safety information

Accessories

Warning: Use only batteries, chargers, and accessories approved by Nokia for use with this particular model. The use of any other types may invalidate any approval or warranty, and may be dangerous.

For availability of approved accessories, please check with your dealer. When you disconnect the power cord of any accessory, grasp and pull the plug, not the cord.

Battery

Battery and charger information

Your device is powered by a rechargeable battery. The battery intended for use with this device is BL-5J. Nokia may make additional battery models available for this device. This device is intended for use when supplied with power from the following chargers: AC-8E. The exact charger model number may vary depending on the type of plug. The plug variant is identified by one of the following: E, EB, X, AR, U, A, C, K, or UB.

The battery can be charged and discharged hundreds of times, but it will eventually wear out. When the talk and standby times are noticeably shorter than normal, replace the battery. Use only Nokia approved batteries, and recharge your battery only with Nokia approved chargers designated for this device.

If a battery is being used for the first time or if the battery has not been used for a prolonged period, it may be necessary to connect the charger, then disconnect and reconnect it to begin charging the battery. If the battery is completely discharged,

 © 2010 Nokia. All rights reserved.

it may take several minutes before the charging indicator appears on the display or before any calls can be made.

Safe removal. Always switch the device off and disconnect the charger before removing the battery.

Proper charging. Unplug the charger from the electrical plug and the device when not in use. Do not leave a fully charged battery connected to a charger, since overcharging may shorten its lifetime. If left unused, a fully charged battery will lose its charge over time.

Avoid extreme temperatures. Always try to keep the battery between 15°C and 25°C (59°F and 77°F). Extreme temperatures reduce the capacity and lifetime of the battery. A device with a hot or cold battery may not work temporarily. Battery performance is particularly limited in temperatures well below freezing.

Do not short-circuit. Accidental short-circuiting can occur when a metallic object such as a coin, clip, or pen causes direct connection of the positive (+) and negative (-) terminals of the battery. (These look like metal strips on the battery.) This might happen, for example, when you carry a spare battery in your pocket or purse. Short-circuiting the terminals may damage the battery or the connecting object.

Disposal. Do not dispose of batteries in a fire as they may explode. Dispose of batteries according to local regulations. Please recycle when possible. Do not dispose as household waste.

Leak. Do not dismantle, cut, open, crush, bend, puncture, or shred cells or batteries. In the event of a battery leak, prevent battery liquid contact with skin or eyes. If this happens, flush the affected areas immediately with water, or seek medical help.

Damage. Do not modify, remanufacture, attempt to insert foreign objects into the battery, or immerse or expose it to water or other liquids. Batteries may explode if damaged.

Correct use. Use the battery only for its intended purpose. Improper battery use may result in a fire, explosion, or other hazard. If the device or battery is dropped, especially on a hard surface, and you believe the battery has been damaged, take it to a service centre for inspection before continuing to use it. Never use any charger or battery that is damaged. Keep your battery out of the reach of small children.

© 2010 Nokia. All rights reserved.

Nokia battery authentication guidelines

Always use original Nokia batteries for your safety. To check that you are getting an original Nokia battery, purchase it from a Nokia authorised service centre or dealer, and inspect the hologram label using the following steps:

Authenticate hologram

1. When you look at the hologram on the label, you should see the Nokia connecting hands symbol from one angle and the Nokia Original Enhancements logo when looking from another angle.
2. When you angle the hologram left, right, down and up, you should see 1, 2, 3 and 4 dots on each side respectively.

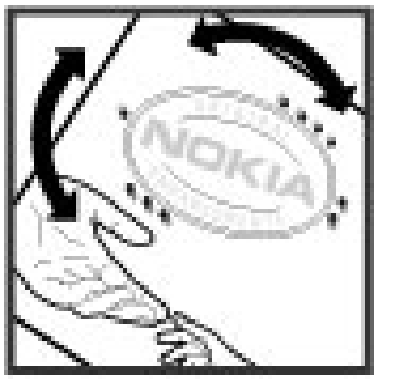

Successful completion of the steps is not a total assurance of the authenticity of the battery. If you cannot confirm authenticity or if you have any reason to believe that your Nokia battery with the hologram on the label is not an authentic Nokia battery, you should refrain from using it, and take it to the nearest Nokia authorised service centre or dealer for assistance.

To find out more about original Nokia batteries, see www.nokia.com/battery.

Taking care of your device

Your device is a product of superior design and craftsmanship and should be treated with care. The following suggestions will help you protect your warranty coverage.

- Keep the device dry. Precipitation, humidity, and all types of liquids or moisture can contain minerals that will corrode electronic circuits. If your device does get wet, remove the battery, and allow the device to dry completely before replacing it.
- Do not use or store the device in dusty, dirty areas. Its moving parts and electronic components can be damaged.

 © 2010 Nokia. All rights reserved.

- Do not store the device in high or cold temperature. High temperatures can shorten the life of electronic devices, damage batteries, and warp or melt certain plastics. When the device warms to its normal temperature from a cold temperature, moisture can form inside the device and damage electronic circuit boards.
- Do not attempt to open the device other than as instructed in this guide.
- Do not drop, knock, or shake the device. Rough handling can break internal circuit boards and fine mechanics.
- Do not use harsh chemicals, cleaning solvents, or strong detergents to clean the device. Only use a soft, clean, dry cloth to clean the surface of the device.
- Do not paint the device. Paint can clog the moving parts and prevent proper operation.
- Use only the supplied or an approved replacement antenna. Unauthorised antennas, modifications, or attachments could damage the device and may violate regulations governing radio devices.
- Use chargers indoors.
- Backup all data you want to keep, such as contacts and calendar notes.
- To reset the device from time to time for optimum performance, power off the device and remove the battery.

These suggestions apply equally to your device, battery, charger, or any accessory.

Recycle

Always return your used electronic products, batteries, and packaging materials to dedicated collection points. This way you help prevent uncontrolled waste disposal and promote the recycling of materials. Check product environmental information and how to recycle your Nokia products at www.nokia.com/werecycle, or nokia.mobi/werecycle.

© 2010 Nokia. All rights reserved.

The crossed-out wheeled-bin symbol on your product, battery, literature, or packaging reminds you that all electrical and electronic products, batteries, and accumulators must be taken to separate collection at the end of their working life. This requirement applies in the European Union. Do not dispose of these products as unsorted municipal waste. For more environmental information, see the product Eco-Declarations at www.nokia.com/environment.

Additional safety information

Small children

Your device and its accessories are not toys. They may contain small parts. Keep them out of the reach of small children.

Operating environment

This device meets RF exposure guidelines in the normal use position at the ear or at least 1.5 centimetres (5/8 inch) away from the body. Any carry case, belt clip, or holder for body-worn operation should not contain metal and should position the device the above-stated distance from your body.

To send data files or messages requires a quality connection to the network. Data files or messages may be delayed until such a connection is available. Follow the separation distance instructions until the transmission is completed.

Parts of the device are magnetic. Metallic materials may be attracted to the device. Do not place credit cards or other magnetic storage media near the device, because information stored on them may be erased.

During extended operation such as an active high speed data connection, the device may feel warm. In most cases, this condition is normal. If you suspect the device is not working properly, take it to the nearest authorised service facility.

Medical devices

Operation of radio transmitting equipment, including wireless phones, may interfere with the function of inadequately protected medical devices. Consult a

 © 2010 Nokia. All rights reserved.

physician or the manufacturer of the medical device to determine whether they are adequately shielded from external RF energy. Switch off your device when regulations posted instruct you to do so. Hospitals or health care facilities may use equipment sensitive to external RF energy.

Implanted medical devices

Manufacturers of medical devices recommend a minimum separation of 15.3 centimetres (6 inches) between a wireless device and an implanted medical device, such as a pacemaker or implanted cardioverter defibrillator, to avoid potential interference with the medical device. Persons who have such devices should:

- Always keep the wireless device more than 15.3 centimetres (6 inches) from the medical device.
- Not carry the wireless device in a breast pocket.
- Hold the wireless device to the ear opposite the medical device.
- Turn the wireless device off if there is any reason to suspect that interference is taking place.
- Follow the manufacturer directions for the implanted medical device.

If you have any questions about using your wireless device with an implanted medical device, consult your health care provider.

Hearing aids

Some digital wireless devices may interfere with some hearing aids.

Vehicles

RF signals may affect improperly installed or inadequately shielded electronic systems in motor vehicles such as electronic fuel injection, electronic antilock braking, electronic speed control, and air bag systems. For more information, check with the manufacturer of your vehicle or its equipment.

Only qualified personnel should service the device or install the device in a vehicle. Faulty installation or service may be dangerous and may invalidate your warranty.

© 2010 Nokia. All rights reserved.

Check regularly that all wireless device equipment in your vehicle is mounted and operating properly. Do not store or carry flammable liquids, gases, or explosive materials in the same compartment as the device, its parts, or accessories. Remember that air bags inflate with great force. Do not place your device or accessories in the air bag deployment area.

Switch off your device before boarding an aircraft. The use of wireless teledevices in an aircraft may be dangerous to the operation of the aircraft and may be illegal.

Potentially explosive environments

Switch off your device in any area with a potentially explosive atmosphere. Obey all posted instructions. Sparks in such areas could cause an explosion or fire resulting in bodily injury or death. Switch off the device at refuelling points such as near gas pumps at service stations. Observe restrictions in fuel depots, storage, and distribution areas; chemical plants; or where blasting operations are in progress. Areas with a potentially explosive atmosphere are often, but not always, clearly marked. They include areas where you would be advised to turn off your vehicle engine, below deck on boats, chemical transfer or storage facilities and where the air contains chemicals or particles such as grain, dust, or metal powders. You should check with the manufacturers of vehicles using liquefied petroleum gas (such as propane or butane) to determine if this device can be safely used in their vicinity.

Emergency calls

Important: This device operates using radio signals, wireless networks, landline networks, and user-programmed functions. If your device supports voice calls over the internet (internet calls), activate both the internet calls and the cellular phone. The device will attempt to make emergency calls over both the cellular networks and through your internet call provider if both are activated. Connections in all conditions cannot be guaranteed. You should never rely solely on any wireless device for essential communications like medical emergencies.

To make an emergency call:

 © 2010 Nokia. All rights reserved.

1. If the device is not on, switch it on. Check for adequate signal strength. Depending on your device, you may also need to complete the following:
   - Insert a SIM card if your device uses one.
   - Remove certain call restrictions you have activated in your device.
   - Change your profile from offline profile mode to an active profile.
   - If the screen and keys are locked, slide the lock switch on the side of the device to unlock them.
2. Press the end key as many times as needed to clear the display and ready the device for calls.
3. To open the dialler, select **Telephone** or .
4. Enter the official emergency number for your present location. Emergency numbers vary by location.
5. Press the call key.

When making an emergency call, give all the necessary information as accurately as possible. Your wireless device may be the only means of communication at the scene of an accident. Do not end the call until given permission to do so.

Certification information (SAR)

This mobile device meets guidelines for exposure to radio waves.

Your mobile device is a radio transmitter and receiver. It is designed not to exceed the limits for exposure to radio waves recommended by international guidelines. These guidelines were developed by the independent scientific organisation ICNIRP and include safety margins designed to assure the protection of all persons, regardless of age and health.

The exposure guidelines for mobile devices employ a unit of measurement known as the Specific Absorption Rate or SAR. The SAR limit stated in the ICNIRP guidelines is 2.0 watts/kilogram (W/kg) averaged over 10 grams of tissue. Tests for SAR are conducted using standard operating positions with the device transmitting at its highest certified power level in all tested frequency bands. The actual SAR level of

© 2010 Nokia. All rights reserved.

an operating device can be below the maximum value because the device is designed to use only the power required to reach the network. That amount changes depending on a number of factors such as how close you are to a network base station.

The highest SAR value under the ICNIRP guidelines for use of the device at the ear is 1.10 W/kg.

Use of device accessories may result in different SAR values. SAR values may vary depending on national reporting and testing requirements and the network band. Additional SAR information may be provided under product information at www.nokia.com.

 © 2010 Nokia. All rights reserved.

Index

A

access codes 11
access points 94
groups 94
accessories 115
accounts 65
alarm
calendar note 105
alarm clock 104
answering calls 35
antennas 28
application manager 107
settings 110
application settings 115
applications 107
attachments 51, 54
audio messages 49
auto-update for time/date 104

B

backing up device memory 106
barring calls 122
battery
inserting 15
saving power 12
blogs 90
Bluetooth 97, 98
Bluetooth connectivity
blocking devices 100
device address 99
device visibility 98
pairing devices 99
receiving data 100
sending data 99
settings 98
turning on/off 98
bookmarks 91
browser
bookmarks 91
browsing pages 88, 90
cache memory 91
searching content 91
security 92
toolbar 89
widgets 90

C

cable connection 102
cache memory 91
calculator 112
calendar 105
toolbar 106
calendar alarm 105
call log 38
call waiting 36
calls 33
answering 35
conference 35
dialled 37
duration of 38
missed 37
options during 34
received 37

© 2010 Nokia. All rights reserved.

redialling 120
rejecting 35
restricting
See *fixed dialling*
settings 120
camera
assigning images to contacts 79
image mode 78
indicators 76, 81
options 79
recording 82
scenes 79
self-timer 80
sending images 79
sequence mode 80
video mode 81
capture settings
in camera 77
cell broadcast messages 56
certificates 117
chat services (IM) 63
clock 104
setting date 104
setting time 104
computer connections 102
See also *data connections*
conference calls 35
contacts 45
copying 47
defaults 46
deleting 45
editing 45
images in 45
overview 44
ringing tones 46
saving 45
sending 45
synchronising 96
voice tags 45
contacts bar 27
copyright protection 119

D

data connections 96
cable 102
device updates 116
PC connectivity 102
synchronisation 96
date and time 104
date and time settings 113
declining calls
See *rejecting calls*
device updates 116
dialled numbers 37
dictionary 113
dismissing calls 35
display settings 30, 114
DRM (digital rights management) 119
duration of calls 38

E

e-mail 52, 55
e-mail messages 53
end all calls option 36

© 2010 Nokia. All rights reserved.

F

factory settings
restoring 119
feeds, news 90
file manager 106
backing up files 107
organising files 106
fixed dialling 48

G

gallery 82
organising 82
viewing 82
viewing images 83
viewing videos 83
general information 10

H

headset 31
help application 10
home screen 20

I

IM (instant messaging) 63
inbox
message 50
inbox, message 50
indicators and icons 26
installing applications 107
internet connection 88
See also *browser*

J

Java applications 107
JME Java application support 107

K

keypad lock 20
keys and parts 18

L

language settings 114
licences 119
lock code 11
lock switch 20
locking
remotely 30
locking the keys 20
loudspeaker 29

M

Mail for Exchange 55
mailbox
e-mail 53
voice 34
media
music player 68
RealPlayer 110
media bar 24
media key 24
memory
clearing 13
web cache 91
memory card 16
backing up files 107

© 2010 Nokia. All rights reserved.

editing 106
menu 21
messages
e-mail 53
folders for 48
icon for incoming 50
multimedia 51
settings 57
voice 34
Mini Map 90
MMS (multimedia message service) 49, 51, 58
multimedia messages 49, 51, 58
music player 68
playlists 70
muting sound 35

N

network settings 93
news feeds 90
Nokia account 60, 65
Nokia Care 24
Nokia Ovi Player 71, 72
Nokia support information 10
notes 112
notification light 120

O

offline profile 28
outbox, message 49
Ovi Contacts 59, 60
adding friends 62
availability status 61
connection settings 67
landmarks 65
personalisation 66
presence 65
profiles 61
searching 62
settings 65
sharing your location 61, 66
synchronising 63
Ovi Music 72
Ovi Store 104

P

packet data connection
access point settings 95
counters 38
settings 102
page overview 90
personal certificates 117
personalisation 67
Phone setup 25
photos
See *camera*
PIN code 11
PIN2 code 11
podcasting
downloads 74
settings 73
presence 65
presentations, multimedia 51
profiles 68
offline restrictions 28
personalisation 68
proximity sensor 33
proxy settings 96

© 2010 Nokia. All rights reserved.

PUK codes 11

R

radio
listening 75
stations 76
RealPlayer 110
recording settings
in camera 77
recording video clips 81
rejecting calls 35
remote locking 30
remote mailbox 53
remote SIM mode 101
removing applications 109
ringing tones 68
roaming 93

S

scenes
image and video 79
searching 103
security
certificates 117
web browser 92
security code 11
security module 119
self-timer
camera 80
sensor settings 30
sent messages folder 49
service commands 56
service messages 51
settings 77, 113, 115
access points 94
applications 115
Bluetooth connectivity 98
call divert 121
calls 120
certificates 117
date and time 113
display 114
language 114
messages 58
network 93
packet data 102
packet data access points 95
podcasting 73
video centre 87
sharing your location 64
shooting modes
camera 79
SIM card
inserting 13
messages 56
removing 32
SIM card security 116
SMS (short message service) 49
software applications 107
software updates 11
songs 68
speakerphone 29
speed dialling 36
support resources 10
Symbian applications 107
synchronisation 63
synchronisation of data 96

© 2010 Nokia. All rights reserved.

T

text input 40, 43, 44
text messages
receiving and reading 50
replying to 50
sending 49
settings 57
SIM messages 56
themes 67
time and date 104
tones 68
touch screen 21, 33, 44
transferring content 25
transferring music 71
troubleshooting 122

U

updates 11
USB cable connection 102
useful information 10

V

video
my videos 86
playing video clips 86
transferring video clips 87
Video Centre 84
video centre
downloading 84
video feeds 86
viewing 84
virtual keyboard 39
voice calls
See *calls*
voice commands 36, 115
See also *voice dialling*
voice control 115
voice dialling 36
volume controls 29

W

wallpaper 67
web connection 88
web logs 90
week settings 105
widgets 90
wrist strap 31

Z

zooming 81

© 2010 Nokia. All rights reserved.