Theoretic Mass(kg)		Revision	
Surface Area(dm2)		A4	

Thread	Hole	Shaft

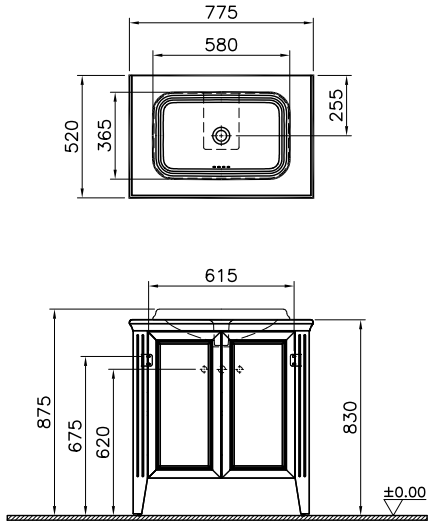

item	Quantity	Part Name	Drawing No	Material	Material Class
1	1	Washbasin Unit	62168		

This drawing can only be used for the intended purposes. Unauthorized copying is strictly prohibited.

Series	Material	Material Class
VALARTE	Washbasin Unit	

Drawn By	Controlled By	Approved By	Date	Drawing No	Scale
G.GULTER	S.YUCEL	V.SARIGOL	09.01.2018	62168	1/20

VitrA® | ARTEMA®

R.S	Description	Date	NAME