Theoretic Mass(kg)		Revision	
Surface Area(dm2)		A4	

Thread	Hole	Shaft

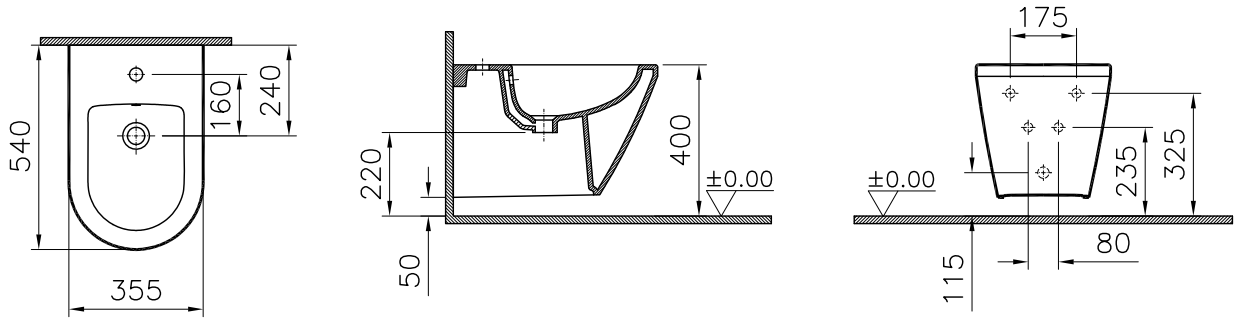

item	Quantity	Part Name	Drawing No	Material	Material Class
1	1	Wall-hung Bidet	7042-0288	Ceramic	

This drawing can only be used for the intended purposes. Unauthorized copying is strictly prohibited.

Series	Material	Material Class
S80	Wall-hung Bidet	Ceramic

Drawn By	Controlled By	Approved By	Date	Drawing No	Scale
G.GULTER	N.BALTACI	V.SARIGOL	11.09.2017	7042	1/20

VitrA® | ARTEMA®

R.S	Description	Date	NAME