Theoretic Mass(kg)		Revision	
Surface Area(dm2)		A4	

Thread	Hole	Shaft

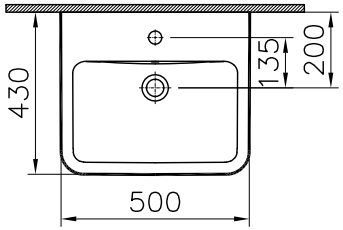

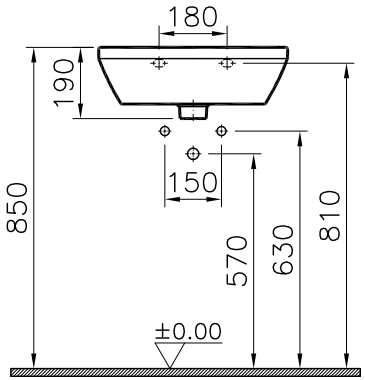

PROTOTYPE DRAWING

item	Quantity	Part Name	Drawing No	Material	Material Class
1	1	Washbasin	7048-0001	Ceramic	

This drawing can only be used for the intended purposes. Unauthorized copying is strictly prohibited.

Series	Material	Material Class
S80	Ceramic	

Washbasin

Drawn By	Controlled By	Approved By	Date	Drawing No	Scale
G.GULTER	N.BALTACI	V.SARIGOL	17.11.2017	7048	1/20

VitrA® | ARTEMA®

R.S	Description	Date	NAME