Theoretic Mass(kg)		Revision	
Surface Area(dm2)		A4	

Thread	Hole	Shaft

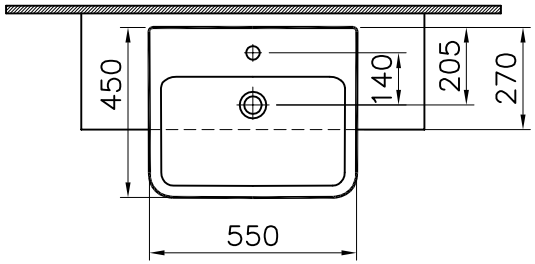

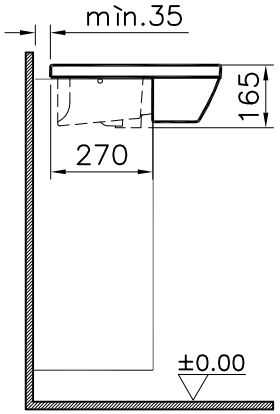

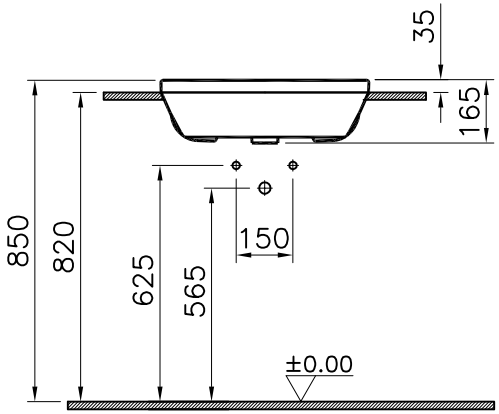

PROTOTYPE DRAWING

item	Quantity	Part Name	Drawing No	Material	Material Class
1	1	Semi-recessed basin	7069-0001	Ceramic	

This drawing can only be used for the intended purposes. Unauthorized copying is strictly prohibited.

Series	Material	Material Class
	Ceramic	
	Semi-recessed basin	

Drawn By	Controlled By	Approved By	Date	Drawing No	Scale
G.GULTER	N.BALTACI	V.SARIGOL	07.06.2018	7069	1/20

VitrA® | ARTEMA®

R.S	Description	Date	NAME