| Theoretic Mass(kg) | | Revision | |
|---|---|---|---|
| Surface Area(dm2) | | A4 | |

| Thread | Hole | Shaft |
|---|---|---|
| | | |

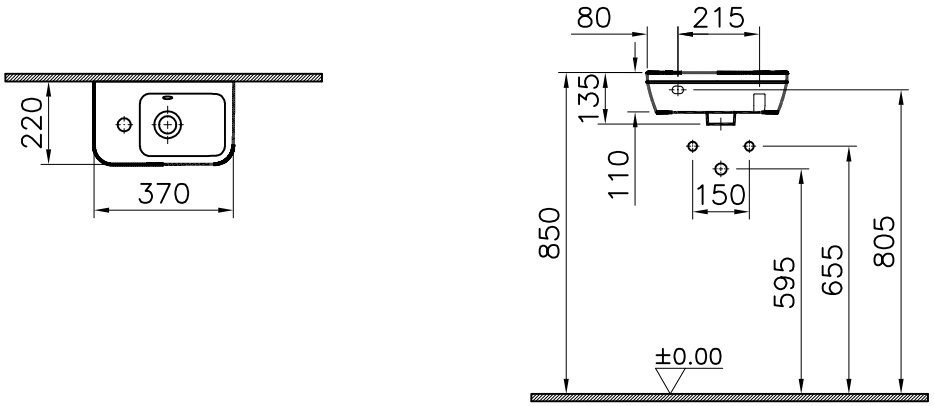


PROTOTYPE DRAWING

| item | Quantity | Part Name | Drawing No | Material | Material Class |
|---|---|---|---|---|---|
| 1 | 1 | Compact Left Faucet Area | 7090-0028 | Ceramic | |

This drawing can only be used for the intended purposes. Unauthorized copying is strictly prohibited.

| Series | Material | Material Class |
|---|---|---|
| INTEGRA | Ceramic | |
| | Compact Left Faucet Area | |

| Drawn By | Controlled By | Approved By | Date | Drawing No | Scale |
|---|---|---|---|---|---|
| T.TAYAR | N.BALTACI | S.VEDAT SARIGOL | 26.09.2018 | 7090 | 1/20 |

VitrA® | ARTEMA®

| R.S | Description | Date | NAME |
|---|---|---|---|
| | | | |