bcdesigns

CUSTOMER DATA SHEET - CERAMICS

SALES CODE:	BCT101B	DESCRIPTION:	1000 Single Bowl Angled Marble 1TH - Black

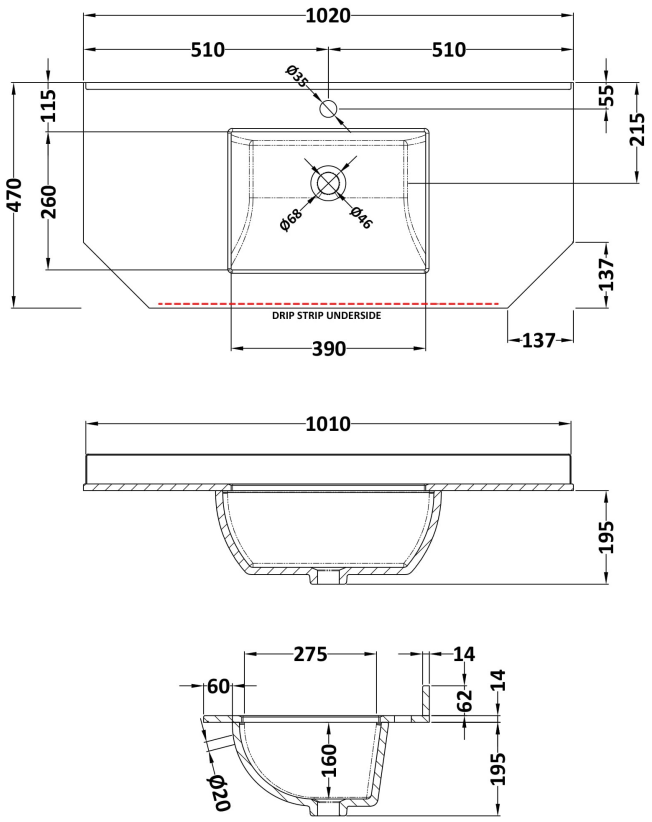

PRODUCT DIMENSIONS			
Height (mm)	Width (mm)	Depth (mm)	Nett Wgt Kg
268	1020	470	18

PACKAGING DIMENSIONS			
Height (mm)	Width (mm)	Depth (mm)	Gross Wgt Kg
250	1100	580	18.5

PACKAGING DATA			
Box Colour	White Cardboard Box		
Box Qty	1	Label Colour	White Label
Label Size	100 x 50	Label Qty	2

OUTER BOX DIMENSIONS (If Applicable)			
Height (mm)	Width (mm)	Depth (mm)	Gross Wgt Kg
Barcode	xxxxxxxxxxx		

PRODUCT DETAILS

Country of Origin	China	Certification	CE	N/A	WRAS	N/A	WRAS Number	N/A
Fitting Instruction	No	Product Material	Vitreous China, Natural Marble					

PANS/BIDETS

Trap Style		Includes Seat	

CISTERNS

Fittings		Operating Type	
Lever Type			

SEAT

Type		Function	
Material			
Hinge Type		Hinge Material	

BASINS

Tap Hole	1 Taphole	Chain Stay Hole	No
Template	Not Applicable	Waste Type Req'd	Slotted
Overflow Incl.	Yes	Overflow Cover	Yes
Inner Bowl Depth	160mm		

GENERAL

Fixing Supplied	