After Care Service

Cleaning your product

When cleaning the mirror or any mirrored surfaces it is recommended to use a soft, dry, non abrasive cloth with the mirror turned off. Do not use cleaning agents or abrasive materials.

Do not allow moisture to come into contact with any electrical components.

Troubleshooting & After care service

For any further assistance, please contact our tech support team at: 01225 303900.

We reserve the right to amend the specification of its products at any time if an opportunity to improve the product occurs. All dimensions are approximate and are quoted within reasonable tolerances.

Compliance

This product complies with all relevant British and European safety standards.
This product containts light source(s) of energy class G
(EU) 2019/2020 and (EU) 2019/2015

Customer Services, Brassmill Lane Trading Estate, Bath BA1 3JF.
Tel 01225 303900 | www.roperrhodes.co.uk

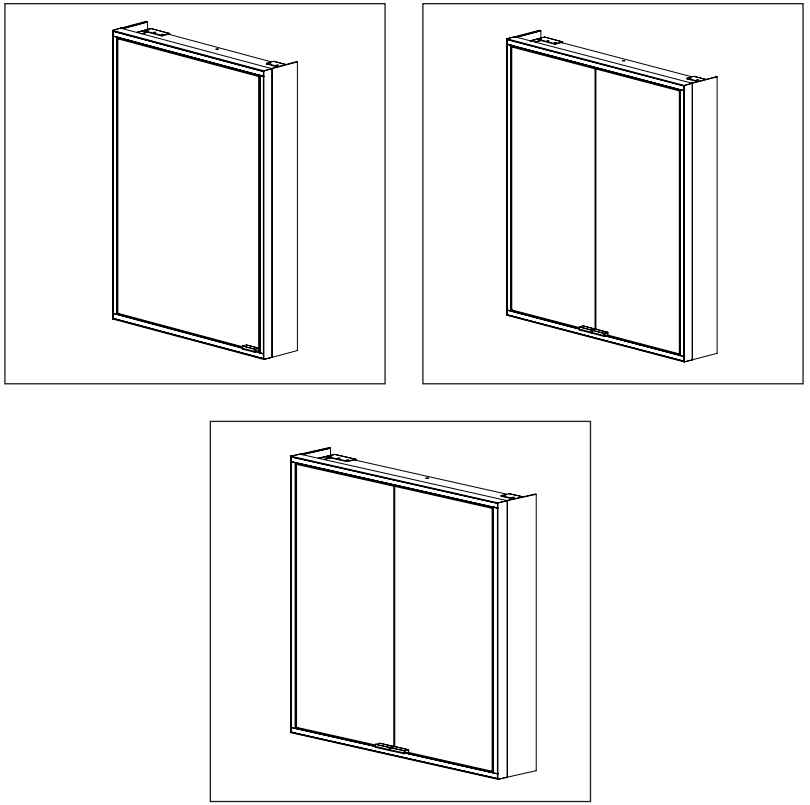

LED Illuminated Recessed Cabinet
Installation & Aftercare Instructions

Retain for future reference

Electrical Safety

Suitable for UK Installations only.

All fittings must be installed by a competent person, in accordance with current IEE wiring regulations. If in doubt consult a qualified electrician.

Important: Always switch off the electrical supply at the mains before installation and maintenance. It is recommended that the fuse is withdrawn or the circuit breaker is switched off for the necessary circuit before installation commences.

This product is manufactured to class I category and must have an earth connection.

WIRING DIAGRAM - MAINS SUPPLY

COLOUR CODING:	
L - Live	= Brown
N - Neutral	= Blue
⏚ - Earth	= Green & Yellow

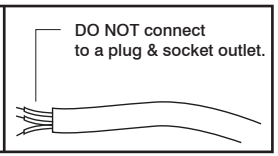

Bathroom Zones

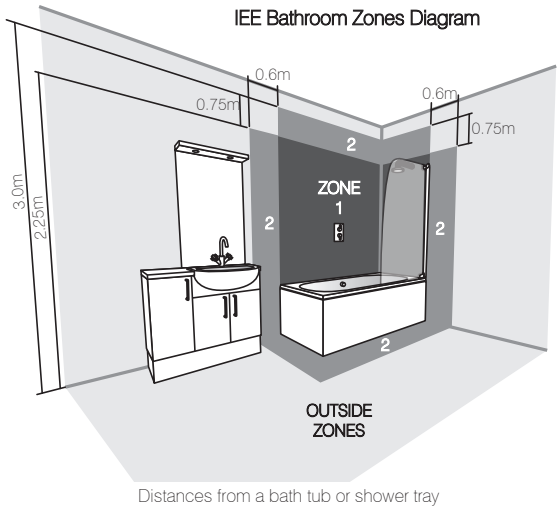

Distances from a bath tub or shower tray

Bathroom fittings are subject to the appropriate zones in accordance with IEE Regulations. This product is only suitable for permanent indoor installation in Zone 2 and outside zones. (See above) This product is not suitable for installation in Zone 0 or 1, saunas, steam rooms or shower cubicles. Do not connect to a trailing plug and socket. Do not install onto surfaces that are either damp or electrically conductive.

Final installation stage - Recess and Wall Mounted

Step 6 - Door Alignment

6.1 – Adjust the cabinet doors using the adjustment screws on the hinges. As shown below.

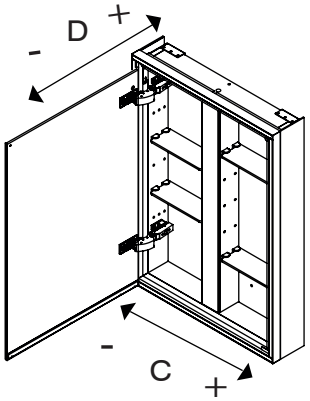

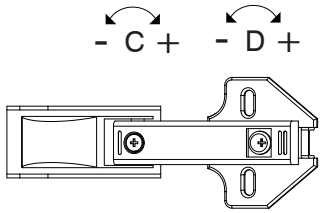

Step 7 - Adjusting the shelves

Warning: Do not remove doors to adjust shelves.
Note: Shelves are pre-installed.

7.1– Slide the glass shelf into the shelf supports (7.1)

7.2 - Tighten the screw underneath the shelf support to secure the shelf in place (6.3).

7.3 – Repeat steps 7.1 snd 7.2 for the remaining shelves.

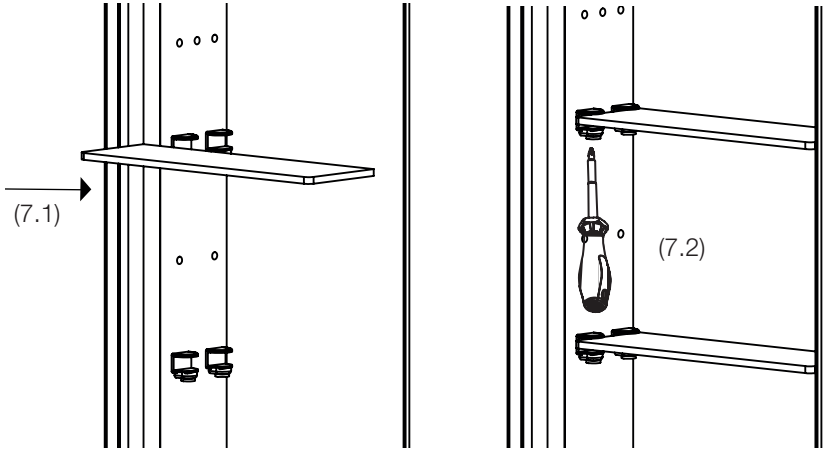

Operating Instructions

The Vault cabinet comes with LED lighting and heated doors, which are controlled via a fixed touch bar located underneath the cabinet. The lighting and heated pads can be controlled using the button functions detailed below:

Turn Cabinet ON/OFF

To turn the product on/off, short press the touch bar. When the product is on, the heated demister will turn on.

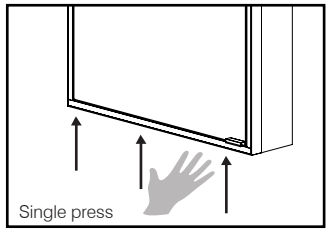

Change LED colour

1. When the product is ON
2. Quickly double press the touch bar to cycle through the colour temperature options. (3000k, 4000K and 6000K)

Note: The colour temperature will be memorised.

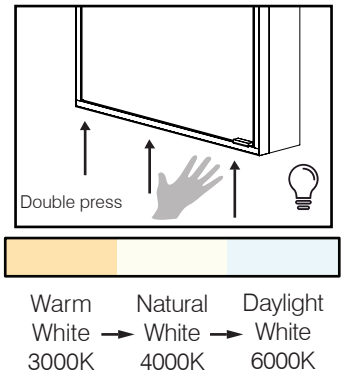

Change LED intensity

1. When the product is ON
2. Press and hold the touch bar to adjust its brightness.
3. Remove hand from touch bar once desired intensity is reached.

Note: The brightness will be memorised.

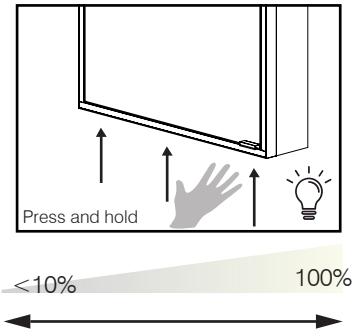

Installation Procedure - Recess

Important: Before starting the installation process, make sure the electrical supply is switched off. It is recommended that the fuse is withdrawn or the circuit breaker is switched off for the necessary circuit.

Important: Before starting the installation process, ensure the partition construction is suitable. Ensure it can support the weight of the cabinet, there is enough depth within the wall partition to house the cabinet, studs and noggins are suitably spaced and there is nothing obstructing the recessed area.

Important: Do not remove the glass doors when installing the cabinet.

Important: Do not tile over the frame.

Note: As the cabinet is recessed into the wall it will require the construction of a framework within the wall to seat and support the cabinet. This must be straight and square to ensure a successful installation. If in doubt consult a professional fitter.

Step 1 - Marking out the recessed area

1.1 - Before cutting any recess, measure the appropriate dimensions shown in the below diagram.

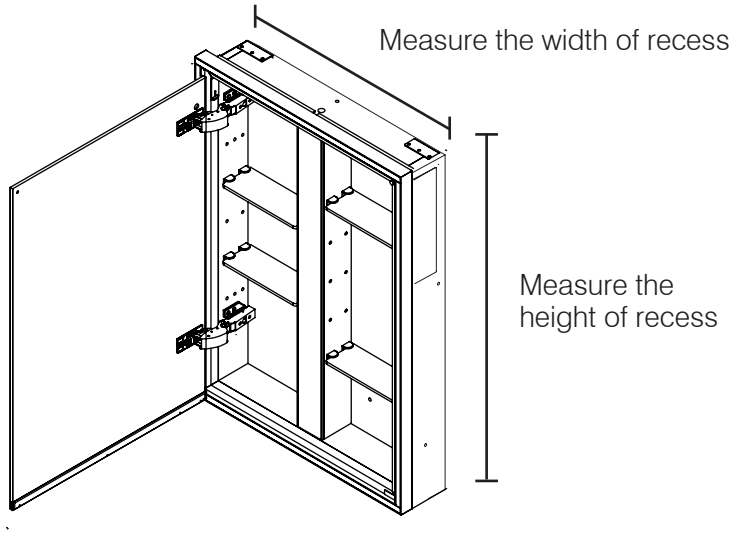

1.2 - Mark out the recess on the wall. Special attention must be taken to ensure there is nothing within the desired recessed space.

Installation Procedure - Recess

Step 2 - Fabrication of internal framework

2.1 - Construct a framework on the rear of the wall partition as shown below that will securely house the recessed cabinet.

2.2 - Check the fit of the cabinet into the frame ensuring that it fits square and flush within the framework. Remove cabinet once successfully checked.

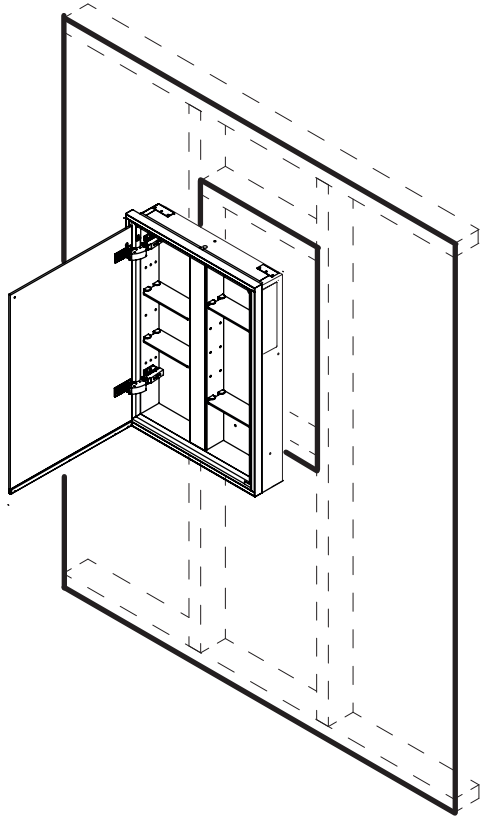

Step 3 - Connecting to power

Important: Before connecting the cabinet to the mains supply, make sure the electrical supply is switched off. It is recommended that the fuse is withdrawn or the circuit breaker is switched off for the necessary circuit.

3.1 - Connect to mains electrical supply. Connections should be made in accordance with the latest IEE regulations. This cabinet is manufactured to CLASS 1 and requires an earth connection.

Installation Procedure - Wall Mounted

Colour matched side panels can be purchased as a separate item in the following finishes:

Item Code	Description
TAC-CSK.W	TAVI CAB SIDE PANEL - Gloss White
TAC-CSK.G	TAVI CAB SIDE PANEL - Gloss Light Grey
TAC-CSK.SG	TAVI CAB SIDE PANEL - Storm grey
TAC-CSK.VRG	TAVI CAB SIDE PANEL - Viridian Green
TAC-CSK.OB	TAVI CAB SIDE PANEL - Oxford Blue
TAC-CSK.GSP	TAVI CAB SIDE PANEL - Gloss Spruce
TAC-CSK.C	TAVI CAB SIDE PANEL - Gloss Clay

Step 5 - Turning the power on

Important: Before turning the power back on, make sure the cabinet is securely installed and all electrical connections are safe to turn on.

5.1 – If the fuse was removed, re-insert the fuse and switch power on. If circuit breaker was switched off, turn back on.

5.2 – Check the functionality of the cabinet, operating instructions can be found on page 9.

5.3 - Go to page 10 to view how to install the shelves and adjust the door position.

Installation Procedure - Wall Mounted

Step 3 - Connecting to power

Important: Before connecting the cabinet to the mains supply, make sure the electrical supply is switched off. It is recommended that the fuse is withdrawn or the circuit breaker is switched off for the necessary circuit.

3.1 – Connect to mains electrical supply. Connections should be made in accordance with the latest IEE regulations. This cabinet is manufactured to CLASS 1 and requires an earth connection.

Step 4 - Fitting side panels

4.1 – Align the mirror sides or colour matched sides with the side of the cabinet.

4.2 – From the inside of the cabinet, screw the sides to the cabinet using the screws and cover caps provided.

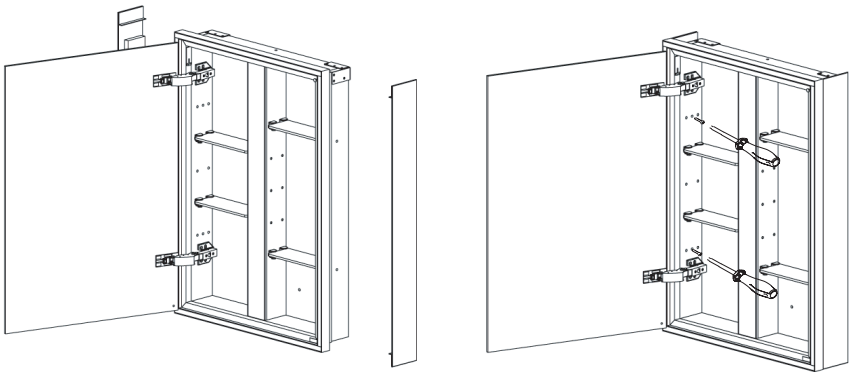

Installation Procedure - Recess

Step 4 - Finishing the installation

4.1 – Fit the cabinet into the recess. The cabinet should be able to hold itself within the frame.

4.2 – Screw 4 screws to the studwork through the middle holes on the sides of the cabinet. 2 screws on each side of the cabinet (4.2).

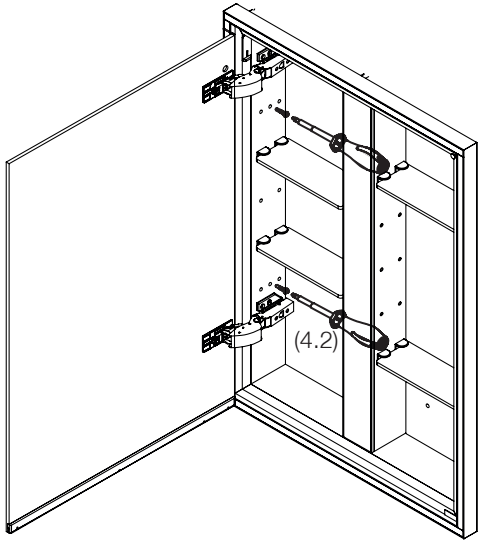

4.3 – Check the cabinet is flush and securely fitted to the wall.

4.4 – Continue to step 5 on page 8.

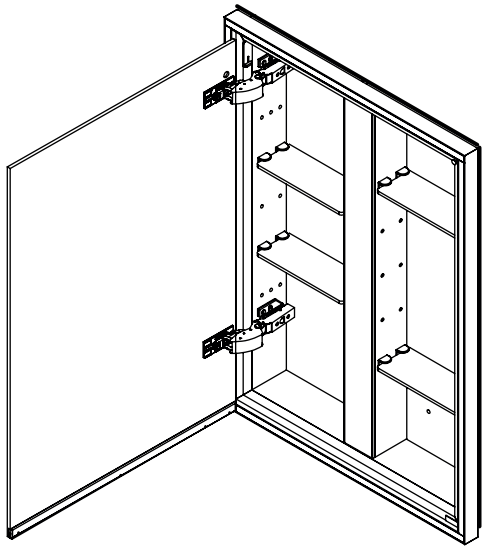

Installation Procedure - Surface Mount

Important: Before starting the installation process, make sure the electrical supply is switched off. It is recommended that the fuse is withdrawn or the circuit breaker is switched off for the necessary circuit.

Important: Before starting the installation process, ensure the wall construction is suitable and can support the weight of the cabinet.

Note: The wall plugs supplied are suitable for solid stone / brick walls. For any other wall material use specialist wall plugs.

Important: Install the side mirrors last

Step 1 - Fitting Wall Bracket

1.1 – Using a pencil, mark on the wall where you wish the centre of the top surface of the cabinet to be (1.1).

1.2 – Measure 60mm vertically below this point and make a mark.

1.3 – Using a spirit level, draw a line of distance X centred on this point and parallel with the floor.

1.4 – Align the outer edge of the wall bracket with the ends of this line X.

1.5 – Using the wall bracket as a guide, mark the hole positions.

1.6 – Drill the marked holes and fit the wall plugs.

1.7 – Screw the wall brackets into place ensuring the screws are fully tightened but take care not to overtighten.

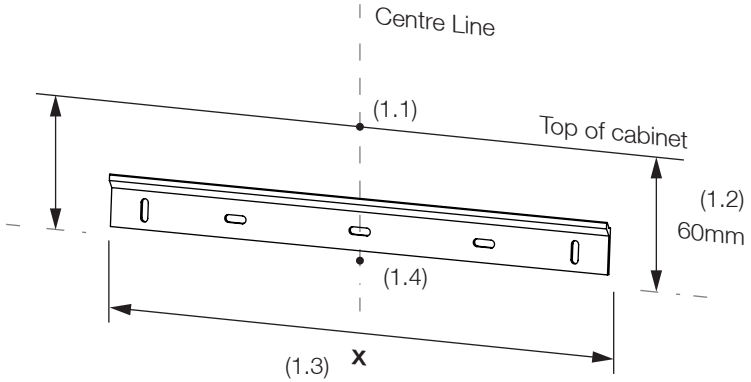

Installation Procedure - Wall Mounted

Step 2 - Hanging Cabinet and Securing it to the wall

2.1 – Hang the cabinet on the wall bracket and check its level. Make sure the wall bracket has entered the slot and the cabinet is not resting on the edge of the wall bracket.

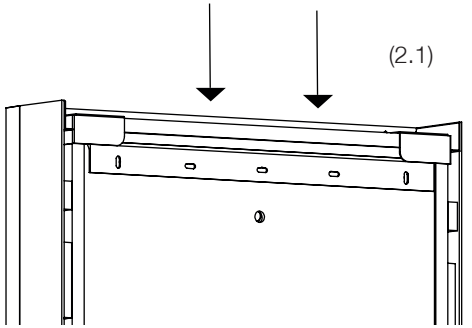

2.2 – When the cabinet is level, mark the hole on the lower section of the cabinet backboard. Take the cabinet off the wall.

2.3 – Drill and fit the wall plug into the hole just marked.

2.4 – Hang the cabinet on the wall bracket as shown in 1.8. Ensure the wall bracket has entered the slots within the cabinet.

2.5– Screw in the internal securing screw.

