RAK KITCHEN TAPS
Belfast | Ceramic Lever | Kitchen Sink Mixer

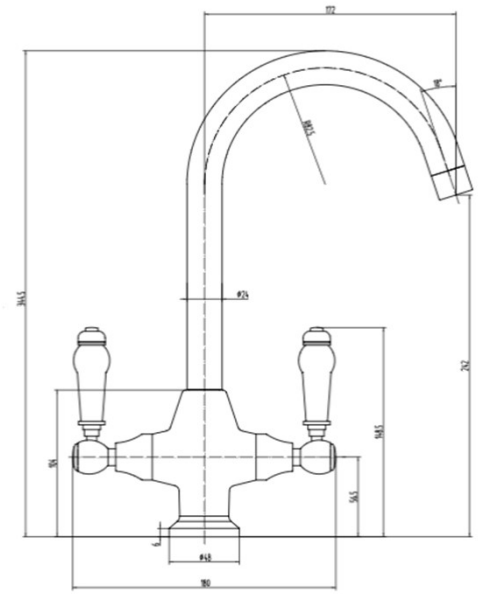

Dimensions:	180w x 172d x 242h mm
Colour:	CHROME
Code:	RAKKIT005
Pressures:	0.2 BAR – 6.0 BAR
Warranty:	15 YEARS
Weight:	1.63 KG

Dimensions: All Dimensions in mm tolerance ± 5% for below 200mm and ± 3% for above 200mm.
Note: Due to a continuing development programme to improve design and performance the manufacturer reserves all rights to vary specifications without prior information.
Please note accessories are for photographic use only.