RANGEmaster

Built from experience

USER GUIDE & INSTALLATION INSTRUCTIONS

Encore Deluxe
100 Induction

U110783-02a

Search Rangemaster UK

RANGEmaster

Show off your kitchen with ...

This is #MyRangemaster

Simply snap and share a picture of your kitchen and tag #MyRangemaster for the chance to win £200 of Rangemaster cookware. If selected we will also send a photographer round to professionally photograph you at home with your range. You might even feature in some of the UK's top home interest titles!

To enter all you have to do is send in photos of your Rangemaster kitchen and tell us in one sentence **what makes Rangemaster the heart of your kitchen?** Entries can be posted on our Facebook page, Instagram or Twitter by tagging @RangemasterUK and using #MyRangemaster. Or, if you prefer, simply send in your entry via e-mail to marketing@agarangemaster.co.uk.

Rangemaster will feature a number of entries on the website online gallery and on the Rangemaster Facebook page, and some kitchens may be selected to be professionally photographed.

*Terms & Conditions Apply

RANGEmaster
COOKWARE

Our range cookers are well known for providing the best possible cooking performance and years of faithful service. However, a great cooker alone cannot guarantee perfect results every time. The other vital ingredients are of course enthusiasm and quality cookware.

We offer cookware to work perfectly with all fuel types manufactured by Rangemaster, including induction hobs. You can be assured of functionality with style, as well as the quality and meticulous attention to detail you expect from the pioneers of range cooking.

Visit www.rangemastercookshop.co.uk

*Terms & Conditions
1. This is my Rangemaster is open to residents of UK mainland only, aged 18 years & over. 2. All entries should be submitted to the advertised e-mail address, or Rangemaster UK Facebook, Instagram or Twitter page using the advertised hashtag & tag. 3. If we would like to professionally photograph your kitchen, you will be contacted via e-mail, Facebook / Twitter message or Instagram comment. 4. We cannot guarantee your kitchen will be professionally photographed. 4. Any photographs received and professional photographs taken will belong to AGA Rangemaster plc with full usage rights. E&OE.

Contents

1. Before you start... 1

Personal safety 1
Electrical connection safety 1
Peculiar smells 2
Ventilation 2
Maintenance 2
Induction care 3
Oven care 4
Hob care 5
Grill/glide-out grill™ care 5
Cooling fan 5
Cooker care 5
Cleaning 5

2. Cooker Overview 6

The Hob 6
The Glide-out Grill 10
The Ovens 11
Main Oven Light 13
Accessories 14

3. 3-button clock 15

4. Cooking tips 17

5. Cooking table 18

6. Cleaning your cooker 19

7. Troubleshooting 23

8. Installation 26

Dear Installer 26
Safety Requirements and Regulations 26
Provision of Ventilation 26
Location of Cooker 26
Positioning the Cooker 27
Moving the Cooker 27
Electrical Connection 29
Final Fitting 30
Final Checks 30
Customer Care 30

9. Circuit Diagrams 31

10. Technical Data 33

1. Before you start...

Your cooker should give you many years of trouble-free cooking if installed and operated correctly. It is important that you read this section before you start.

Personal safety

This appliance is for cooking purposes only. It must not be used for other purposes, for example heating a room. Using it for any other purpose could invalidate any warranty or liability claim. Besides invalidating claims this wastes fuel and may overheat the control knobs.

- This appliance can be used by children aged from 8 years and above and persons with reduced physical, sensory or mental capabilities or lack of experience and knowledge if they have been given supervision or instruction concerning use of the appliance in a safe way and understand the hazards involved.
- Children **less** than 8 years of age should be kept away unless continuously supervised. Children shall not play with the appliance. Cleaning and user maintenance shall not be made by children without supervision.
- This appliance is designed for domestic cooking only. Use for any other purpose could invalidate any warranty or liability claim.
- The appliance and its accessible parts become hot during use and will retain heat even after you have stopped cooking. Care should be taken to avoid touching heating elements.
- A long term cooking process has to be supervised from time to time. A short term cooking process has to be supervised continuously.
- **DANGER OF FIRE: DO NOT** store items on the cooking surfaces.
- To avoid overheating, **DO NOT** install the cooker behind a decorative door.
- Accessible parts will become hot during use and will retain heat even after you have stopped cooking. Keep babies and children away from the cooker and never wear loose-fitting or hanging clothes when using the appliance.
- **DO NOT** use a steam cleaner on your cooker.
- **ALWAYS** keep combustible materials, e.g. curtains, and flammable liquids a safe distance away from your cooker.
- **DO NOT** spray aerosols in the vicinity of the cooker while it is on.

Electrical connection safety

The electrical installation must be installed in accordance with all relevant British Standards/Codes of Practice, BS 7671. Or with the relevant national and local regulations and with the local gas and electricity supply companies' requirements.

Otherwise, all installations must be in accordance with the relevant instructions in this booklet.

Read the instructions before installing or using this appliance.

- This appliance is heavy so take care when moving it.
- The cooker may be installed in a kitchen/kitchen diner but **NOT** in a room containing a bath or shower.
- This appliance **MUST** be earthed.
- The cooker **MUST NOT** be connected to an ordinary domestic power point.
- It is normal for the hob control display to flash for about 2 seconds during first power setting.
- Set the clock to make sure that the oven is functional – see the relevant section in this manual.
- The appliance must be installed in accordance with the regulations in force and only in a well ventilated space.
- Failure to install the appliance correctly could invalidate any warranty or liability claims and lead to prosecution.
- **DO NOT** install the appliance on a platform.
- **DO NOT** manouvre the cooker while it is plugged into the electricity supply.
- Before electrical reconnection, check that the appliance is electrically safe.

Peculiar smells

When you first use your cooker it may give off an odour. This should stop after use.

Before using your cooker for the first time, make sure that all packing materials have been removed and then, to dispel manufacturing odours, turn all the ovens to 200°C and run for at least an hour.

Before using the grill for the first time you should also turn on the grill and run for 30 minutes with the grill pan in position, pushed fully back and the grill door open.

Make sure the room is well ventilated to the outside air (see 'Ventilation' below). People with respiratory or allergy problems should vacate the area for this brief period.

Ventilation

The use of a cooking appliance results in the production of heat and moisture in the room in which it is installed. Make sure that the kitchen is well ventilated. Keep natural ventilation holes open or install a powered cooker hood that vents outside.

Prolonged intensive use of the appliance may call for additional ventilation, for example opening a window, or more effective ventilation, for example increasing the level of mechanical ventilation where present.

Maintenance

- Only a qualified service engineer should service the appliance and only approved spare parts should be used. It is recommended that this appliance is serviced annually.
- **DO NOT** use cooking vessels on the hotplate that overlap the edges.
- **ALWAYS** allow the cooker to cool and then switch it off at the mains before cleaning or carrying out any maintenance work, unless specified otherwise in this guide.
- **DO NOT** use the control knobs to manoeuvre the cooker.
- **NEVER** operate the cooker with wet hands.
- **DO NOT** use a towel or other bulky cloth in place of a glove – it might catch fire if brought into contact with a hot surface.
- **DO NOT** use hotplate protectors, foil or hotplate covers of any description. These may affect the safe use of your hotplate burners and are potentially hazardous to health.
- **NEVER** heat unopened food containers. Pressure build up may make the containers burst and cause injury.
- **DO NOT** use unstable saucepans. **ALWAYS** make sure that you position the handles away from the edge of the hotplate.
- **NEVER** leave the hotplate unattended at high heat settings. Pans boiling over can cause smoking, and greasy spills may catch on fire. Use a deep fat thermometer whenever possible to prevent fat overheating beyond the smoking point.
- Unattended cooking on a hob with fat or oil can be dangerous and may result in fire.
- **NEVER** leave a chip pan unattended. **ALWAYS** heat fat slowly, and watch as it heats. Deep fry pans should be only one third full of fat.
- **NEVER** try to move a pan of hot fat, especially a deep fat fryer. Wait until the fat is cool. Filling the pan too full of fat can cause spill over when food is added. If you use a combination of oils or fats in frying, stir them together before heating, or as the fats melt.
- Foods for frying should be as dry as possible. Frost on frozen foods or moisture on fresh foods can cause hot fat to bubble up and over the sides of the pan. Carefully watch for spills or overheating of foods when frying at high or medium high temperatures.
- **DO NOT** use the top of the flue (the slots along the back of the cooker) for warming plates, dishes, drying tea towels or softening butter.
- **DO NOT** use water on grease fires and never pick up a flaming pan. Turn the controls off and then smother a flaming pan on a surface unit by covering the pan completely with a well fitting lid or baking tray. If available, use a multi-purpose dry chemical or foam-type fire extinguisher.
- **DO NOT** modify this appliance. This appliance is not intended to be operated by means of external timer or separated remote-control system.
- If flammable materials are stored in the drawer, oven(s) or grill(s) it may explode and result in fire or property damage.

Induction care

- **IMPORTANT INFORMATION FOR PACEMAKER AND IMPLANTED INSULIN PUMP USERS:** The functions of this hob comply with the applicable European standards on electromagnetic interference. If you are fitted with a pacemaker or implanted insulin pump and are concerned please consult your doctor for medical advice.
- When the hob is in use keep magnetic items away, such as credit and debit cards, floppy disk, calculators, etc.
- **To fully utilise the power of your induction hob and to ensure longevity of performance, we recommend the use of AGA Rangemaster Induction Pots and Pans. If you decide to purchase an alternative set of pans for use on your induction cooker, we would strongly recommend that composite aluminium pans with steel inserts, example shown Fig. 1.1, are avoided. This type of pan construction can significantly reduce the lifetime and performance of your induction cook top.**
- Take care when touching the marked cooking areas of the hob.
- Use adequately sized pans with flat bottoms that are large enough to cover the surface of the hotplate heating area. The use of undersized pans will expose a portion of the surface unit to direct contact and may result in the ignition of clothing.
- Only certain types of glass, glass-ceramic, earthenware or other glazed containers are suitable for use on the warming zone; others may break because of the sudden change in temperature.
- Only certain types stainless steel, enamelled steel pans or cast iron pans with enamelled bases are suitable for induction hob cooking.
- Take care **NOT** to scratch the surface when placing cookware on the glass panel.
- Only certain types of glass, glass-ceramic, earthenware or other glazed containers are suitable for hotplate cooking; others may break because of the sudden change in temperature. **NEVER** cook directly on the hob surface (**Fig. 1.2**).
- **DO NOT** leave the hob zones switched on unless being used for cooking.
- **DO NOT** stand or rest heavy objects on the hob. Although the ceramic surface is very strong, a sharp blow or sharp falling object (e.g. a salt cellar) might cause the surface to crack or break (**Fig. 1.3**).
- Should a crack appear in the surface, disconnect the appliance immediately from the supply and arrange for its repair.
- **ALWAYS LIFT** pans off the hob. Sliding pans may cause marks and scratches **(Fig. 1.4)**.

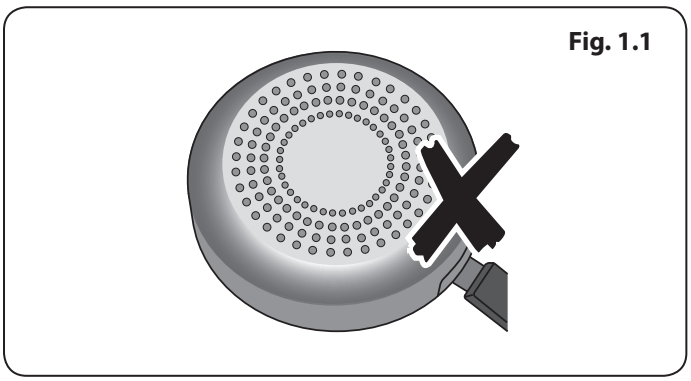

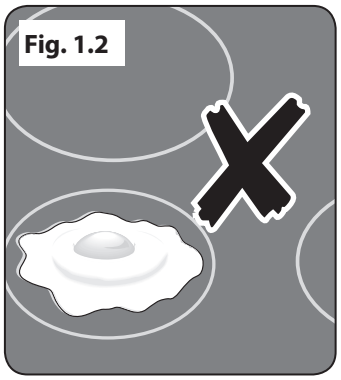

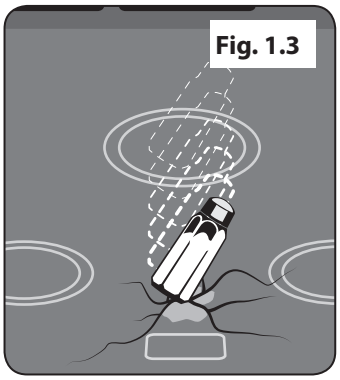

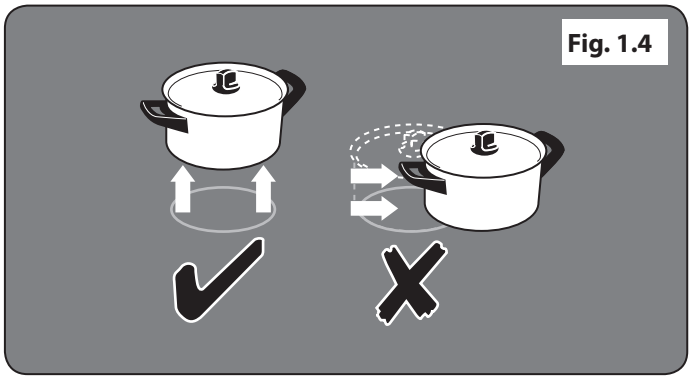

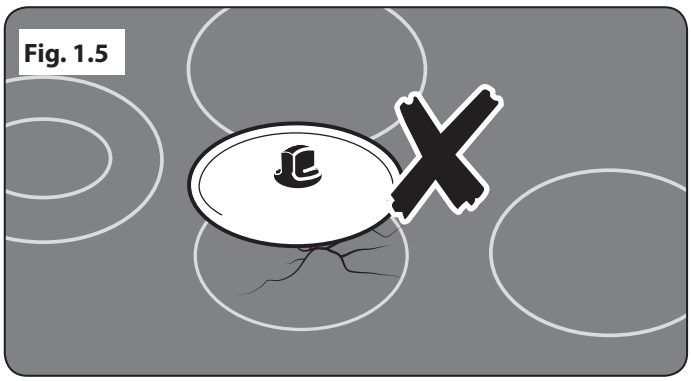

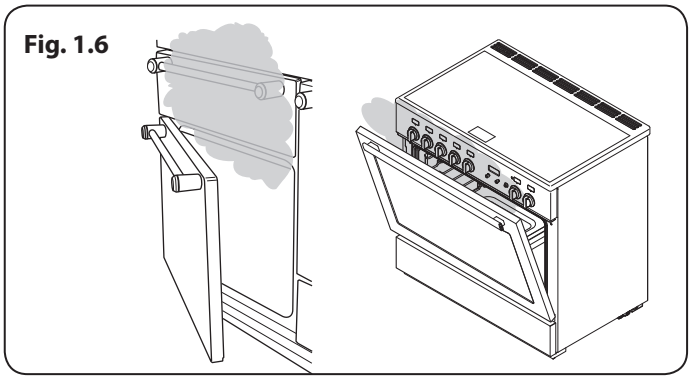

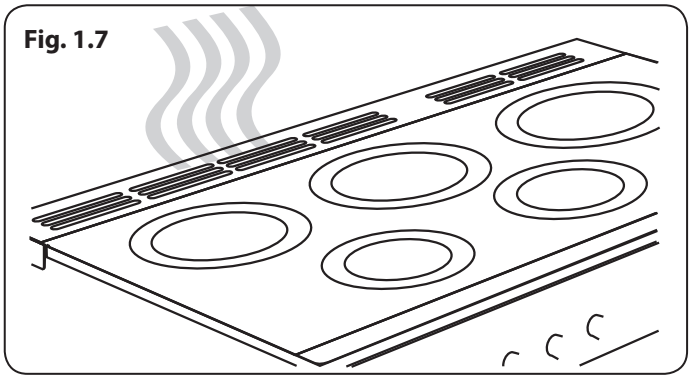

- Take care **NOT TO PLACE HOT LIDS** onto the hob surface (**Fig. 1.5**). Lids that have been used to cover a hot pan can "stick" or create a "vacuum" effect to the Glass Hob. Should this occur, **DO NOT** attempt to lift the lid off the glass surface, this may damage the glass. Instead slide the lid to the edge of the hob surface and remove, taking care not to scratch the hob surface. Alternatively wait until the lid has cooled to room temperature, the vacuum has been released, then remove the lid by lifting it from the hob surface.
- **DO NOT** place anything between the base of the pan and the hob surface (e.g. asbestos mats, aluminium foil, wok stand).
- Take care **NOT** to place metallic objects such as knives, forks, spoons and lids on the hob surface since they can get hot.
- We recommend that you avoid wiping any surface unit areas until they have cooled and the indicator light has gone off. Sugar spills are the exception to this (see 'Cleaning your Cooker'). After cleaning, use a dry cloth or paper towel to remove any cleaning cream residue.
- The ceramic surface should be washed after use in order to prevent it from becoming scratched or dirty. However, you should clean the hob with caution as some cleaners can produce noxious fumes if applied to a hot surface.
- **DO NOT** leave the hob unattended. Care should be taken to not allow your cookware to boil dry. It will damage your cookware and Induction Glass Hob.
- After use, switch off the hob element by its control. **DO NOT** rely on the pan detector.

Oven care

- When the oven is not in use and before attempting to clean the appliance **ALWAYS** be certain that the control knobs are in the **OFF** position.
- Use oven gloves to protect your hand from potential burns.
- Cooking high moisture content foods can create a 'steam burst' when the oven door is opened (**Fig. 1.6**). When opening the oven, stand well back and allow any steam to disperse.
- The inside door face is constructed with toughened safety glass. Take care **NOT** to scratch the surface when cleaning the glass panel.
- Accidental damage may cause the door glass panel to fracture.
- Keep oven vent ducts unobstructed.
- **DO NOT** use harsh abrasive cleaners or sharp metal scrapers to clean the oven door glass since they can scratch the surface, which may result in shattering of the glass.

- Make sure the shelves are pushed firmly to the back of the oven. **DO NOT** close the door against the oven shelves.
- **DO NOT** use aluminium foil to cover shelves, linings or the oven roof.
- When the oven is on, **DO NOT** leave the oven door open for longer than necessary, otherwise the control knobs may become very hot.
- **DO NOT** use the timed oven if the adjoining oven is already warm.
- **DO NOT** place warm food in the oven to be timed.
- **DO NOT** use a timed oven that is already warm.
- Use dry oven gloves when applicable – using damp gloves might result in steam burns when you touch a hot surface.

Hob care

- **NEVER** allow anyone to climb or stand on the hob.
- **DO NOT** use the hob surface as a cutting board.
- **DO NOT** leave utensils, foodstuffs or combustible items on the hob when it is not in use (e.g. tea towels, frying pans containing oil).
- **DO NOT** place plastic or aluminium foil, or plastic containers on the hob.
- **ALWAYS** turn the control to the **OFF** position before removing a pan.
- Avoid heating an empty pan. Doing so may damage both the hob and pan.

Grill/glide-out grill™ care

- When using the grill, make sure that the grill pan is in position and pushed fully in, otherwise the control knobs may become very hot.
- **DO NOT** leave the grill on for more than a few moments without the grill pan underneath it, otherwise the knobs may become hot.
- **NEVER** close the grill door when the grill is on.
- Accessible parts may be hot when the grill is in use. Young children should be kept away.

Cooling fan

This appliance may have a cooling fan. When the grill or oven is in operation the fan will run to cool the fascia and control knobs.

Cooker care

As steam can condense to water droplets on the cool outer trim of the oven, it may be necessary during cooking to wipe away any moisture with a soft cloth. This will also help to prevent soiling and discolouration of the oven exterior by cooking vapours (**Fig. 1.7**).

Cleaning

- Isolate the electricity supply before carrying out any thorough cleaning. Allow the cooker to cool.
- In the interests of hygiene and safety, the cooker should be kept clean at all times as a build up in fats and other food stuff could result in a fire.
- Clean only the parts listed in this guide.
- Clean with caution. If a wet sponge or cloth is used to wipe spills on a hot surface, be careful to avoid steam burns. Some cleaners can produce noxious fumes if applied to a hot surface.
- **NEVER** use paint solvents, washing soda, caustic cleaners, biological powders, bleach, chlorine based bleach cleaners, coarse abrasives or salt.
- **DO NOT** mix different cleaning products – they may react together with hazardous results.
- All parts of the cooker can be cleaned with hot soapy water.
- Take care that no water seeps into the appliance.
- Before you remove any of the grill parts for cleaning, make sure that they are cool or use oven gloves.
- **DO NOT** use any abrasive substances on the grill and grill parts.
- **DO NOT** put the side runners in a dishwasher.
- **DO NOT** put the burner heads in a dishwasher.
- **NEVER** use caustic or abrasive cleaners as these will damage the surface.
- **DO NOT** use steel wool, oven cleaning pads or any other materials that will scratch the surface.
- **NEVER** store flammable materials in the drawer. This includes paper, plastic and cloth items, such as cookbooks, plastic ware and towels, as well as flammable liquids.
- **DO NOT** store explosives, such as aerosol cans, on or near the appliance.
- **DO NOT** use steel wool, oven cleaning pads, or any other materials that will scratch the surface.
- **DO NOT** attempt to disassemble or clean around any burner while another burner is on, otherwise an electric shock could result.

2. Cooker Overview

Fig. 2.1

Fig. 2.2

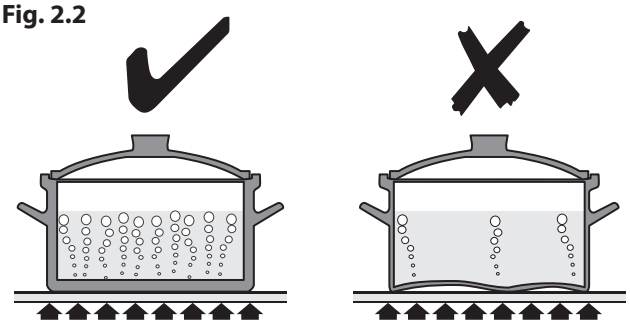

The 100 induction cooker (**Fig. 2.1**) has the following features:

A. 5 induction cooking zones

B. A control panel

C. A separate glide-out grill

D. A multifunction oven

E. Tall fan oven

The Hob

Use only pans that are suitable for induction hobs. We recommend stainless steel, enamelled steel pans or cast iron pans with enamelled bases. Note that some stainless steel pans are not suitable for use with an induction hob so please check carefully before purchasing any cookware.

Pans made of copper, aluminium or ceramic are not suitable for use on an induction hob. The kind of pan you use and the quantity of food affects the setting required. Higher settings are required for larger quantities of food.

Pots and pans should have thick, smooth, flat bottoms (**Fig. 2.2**). This allows the maximum heat transfer from the hob to the pan, making cooking quick and energy efficient. Never use a round-bottomed wok, even with a stand.

The very best pans have bases that are very slightly curved up when cold (**Fig. 2.3**). If you hold a ruler across the bottom you will see a small gap in the middle. When they heat up the metal expands and lies flat on the cooking surface.

Make sure that the base of the pan is clean and dry to prevent any residue burning onto the hob panel. This also helps prevent scratches and deposits.

Always use pans that are the same size as (or slightly larger than) the areas marked on the hob. Using a lid will help the contents boil more quickly.

Take care when placing hot lids onto the hob surface. Lids that have been covering boiling or steaming foods can 'stick' to the ceramic glass. Should this occur, DO NOT attempt to lift the lid off the hotplate: this may damage the hob surface. Instead, slide the lid to the edge of the hob surface and remove.

Always take care before touching the surface, even when the hob is turned off. It may be hotter than you think!

The induction hob comprises of five cooking zones containing induction elements with different ratings and diameters **(Fig. 2.4)** each with a pan detector and residual heat indicator, and a hob control display.

The hob control display **(Fig. 2.5)** informs you of the following induction hob functions:

- Pan detector
- *H* Residual heat indicator
- *A* Automatic heat-up
- Child lock
- *L1/L2* Low temperature setting
- *P* Power boost setting

Pan Detector,

IMPORTANT: After use, switch off the hob element by its control and DO NOT RELY on the pan detector.

If a cooking area is switched on and there is no pan in place or if the pan is too small for the cooking area, then no heat will be generated. The symbol [] will appear on the hob control display; this is the "pan-missing symbol". Place a pan of the correct size on the cooking area and the [] symbol will disappear and cooking can begin. After 10 minutes without detecting a pan the cooking zone will switch off automatically.

Table 2.1 shows the minimum pan sizes recommended for each cooking zone.

Note: Using pans with a base diameter smaller than those recommended will result in a power reduction.

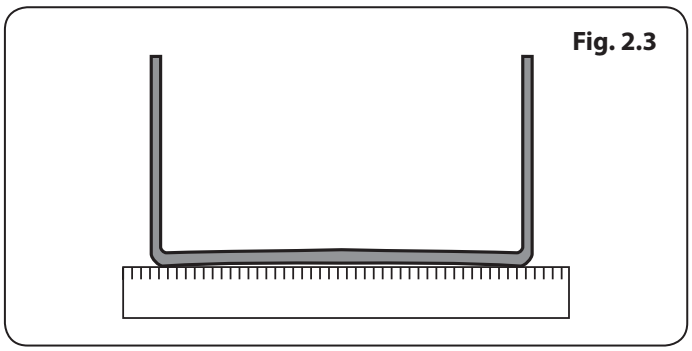

Fig. 2.3

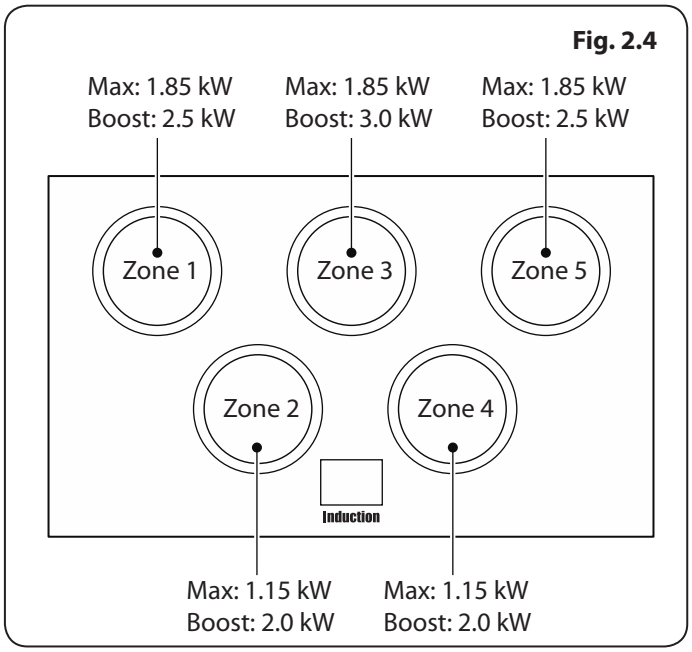

Fig. 2.4

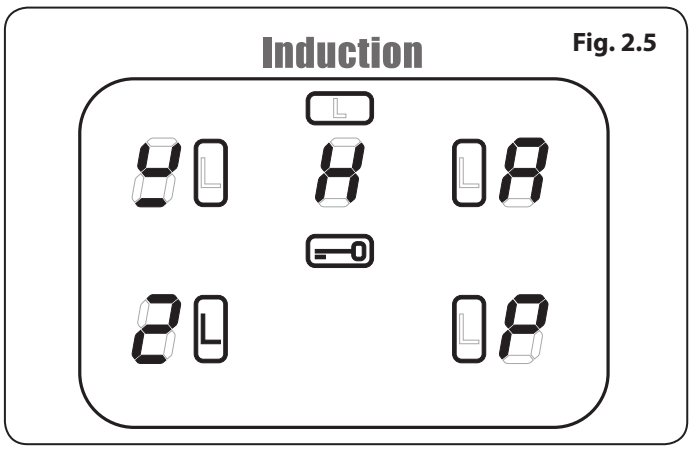

Fig. 2.5

Cooking Zone	Minimum Pan Diameter (Pan Base) mm
Front left	*120*
Rear left	*140*
Centre	*180*
Rear right	*140*
Front right	*140*

Table 2.1

Power Level	Automatic heat-up time at 100% (min:sec)
1	0:48
2	2:24
3	3:50
4	5:12
5	6:48
6	2:00
7	2:48
8	3:36
9	

Table 2.2

Fig. 2.6

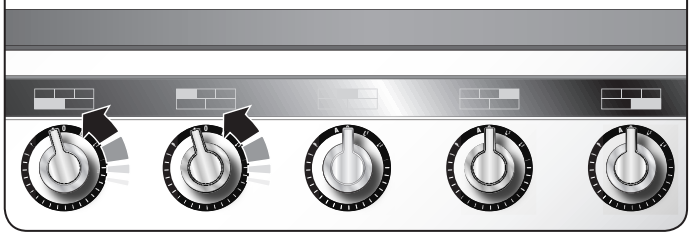

Fig. 2.7

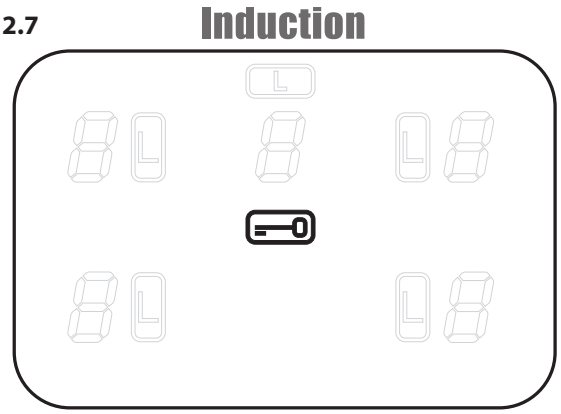

Residual Heat Indicator, H

After use, a cooking zone will remain hot for a while as heat dissipates. When a cooking zone is switched off the residual heat indicator symbol [H], will appear in the display. This shows that the cooking zone temperature is above 60 °C and may still cause burns. Once the temperature has dropped to below 60 °C the [H] will go out.

Automatic Heat-up, A

This function is available on all of the cooking zones. It allows rapid heating up of the element to bring the selected cooking zone up to temperature. Once the zone is at the required cooking temperature the power level will reduce automatically to the preset level.

The function is selected by turning the control knob to the 'A' position. This can be selected by turning the control knob momentarily counter-clockwise from the zero position until the symbol [A] is shown on the hob control display.

Once the [A] is displayed, turn the control knob to the level of your choice (1 to 9). The pan will heat up at 100% power for a specified time before the power is reduced to the level selected.

When the Automatic Heat-up function is activated, the hob control display will flash alternately between the [A] setting and the chosen power level.

Once the automatic heat-up time has ended the hob display will stop flashing and will show the chosen power level.

The Automatic Heat-up function can be stopped by either turning the control knob back to the "0" power setting or turning the control knob to the "9" power setting.

For your guidance **Table 2.2** shows the time available at 100% power depending on the power level selected in the Automatic Heat-up mode.

Child Lock, ⊟

To prevent the unwanted use by children, the hob can be locked.

⚠ **IMPORTANT: This can only be activated when all the cooking zones are switched off.**

To lock the hob, simultaneously turn the two left-hand controls counter-clockwise **(Fig. 2.6)** and hold until the ⊟ symbol appears in the centre of the hob control display **(Fig. 2.7)**.

Note: [A] will flash when locking the hob – this is normal.

Locking the hob will NOT affect the oven; it can still be used.

To unlock the hob, simultaneously turn the two left-hand controls counter-clockwise and hold until the ⊟ symbol disappears from the centre of the hob control display.

Low Temperature Setting, L1/L2

This function should only be used when cooking from cold.

Each cooking area is equipped with 2 low temperature settings:

- *L1* will maintain a temperature of about 40 °C – ideal for gently melting butter or chocolate.
- *L2* will maintain a temperature of about 90 °C – ideal for simmering (bring the pan to the boil and then select *L2* to keep soups, sauces, stews, etc at an optimal simmer).

The maximum time this setting can be used is 2 hours, after which the hob will switch off automatically. If required, you can immediately restart the Low Temperature function by reactivating *L1* or *L2*. To increase the heat, just turn the control knob to the required level.

The maximum times for all other power levels are shown in **Table 2.3**.

Power Boost Setting, P

All of the induction cooking zones have Power Boost available, activated by turning the control knob clockwise until [P] is shown on the hob control display.

Power Boost allows additional power to be made available for each of the cooking zones. This is useful to bring a large pan of water to the boil quickly.

The Power Boost function operates for a maximum of 10 minutes on each zone, after which the power is automatically reduced to setting 9.

When using the Power Boost function, the cooking zones are linked.

Fig. 2.8 shows the hob layout. Zones A and B are linked together as are zones C, D and E.

This means that when using zone A on Power Boost and then switching zone B to Power Boost, the power to zone A will reduce slightly. The last zone switched to Power Boost always takes priority. Zones C, D and E work in the same way.

This is a built in safety device.

Deactivate the Power Boost function by turning the control knob to a lower setting.

Power Level	Maximum Operating Time
L1 and L2	*2 hours*
1	*6 hours*
2	*6 hours*
3	*5 hours*
4	*5 hours*
5	*4 hours*
6	*1.5 hours*
7	*1.5 hours*
8	*1.5 hours*
9	*1.5 hours*
Power Boost	*10 minutes*

Table 2.3

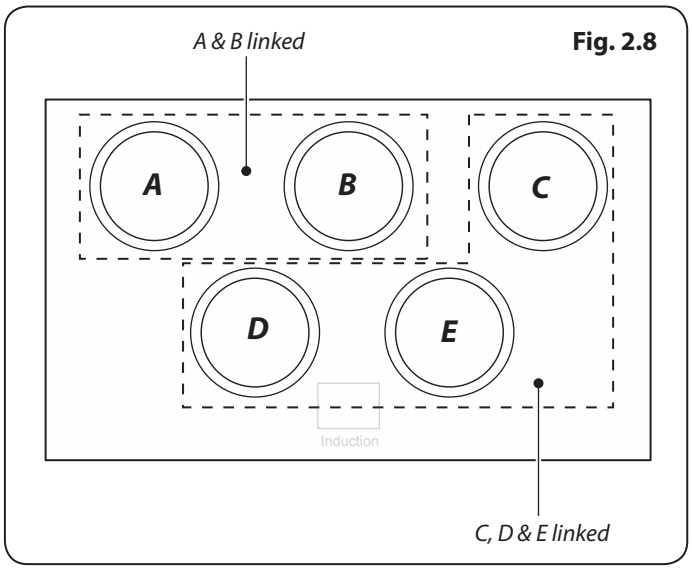

Fig. 2.8

Fig. 2.9

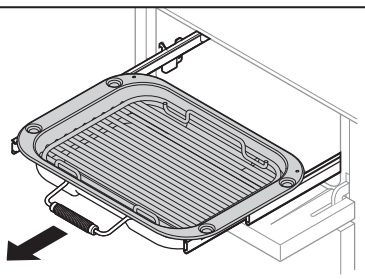

Fig. 2.10

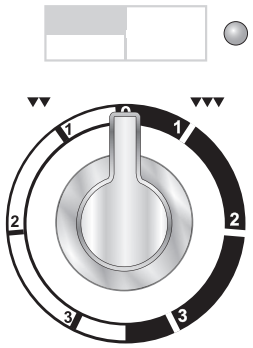

Fig. 2.11

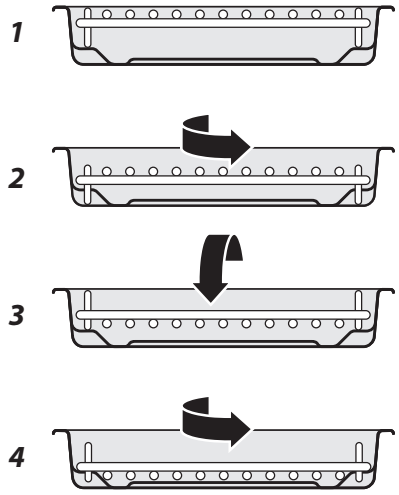

Overheat Function

This function identifies when the temperature of the pan rises rapidly and works to maintain a safe level of pan temperature. It should not interfere with normal cooking.

Cookware with bases that become distorted **(Fig. 2.2)** when heated may interfere with the operation of the Overheat Function. This may result in damage to your cookware or Induction Glass Hob.

Please remember not to leave the hob unattended. Care should be taken to not allow your cookware to boil dry. Damage to your cookware and Induction Glass Hob may result.

Please read and follow the manufacturers' instructions carefully before using cookware on your induction hob.

The Glide-out Grill

CAUTION: This appliance is for cooking purposes only. It must not be used for other purposes, for example room heating.

Accessible parts may be hot when the grill is in use. Young children should be kept away.

Open the door and pull the grill pan carriage forward using the handle (**Fig. 2.9**).

The grill has two elements that allow either the whole area of the pan to be heated or just the right-hand half.

Adjust the heat to suit by turning the knob. To heat the whole grill, turn the knob clockwise **(Fig. 2.10)**.

To heat the right-hand half, turn the knob counter-clockwise. The neon indicator light by the grill control will come on.

For best results, slide the carriage back into the grill chamber and preheat the appropriate part(s) of the grill for two minutes. The grill trivet can be removed and the food placed on it while you are waiting for the grill to preheat.

DO NOT leave the grill on for more than a few moments without the grill pan underneath it, otherwise the knobs may become hot.

Once the grill has preheated, slide the carriage out again. With the trivet back in place with the food on it, slide the carriage back into the grill chamber. Make sure that it is pushed right in.

The grill pan trivet can be set to four different grilling heights by a combination of turning it back to front and turning it upside down **(Fig. 2.11)**.

Do not leave the grill on for more than a few moments, without the grill pan underneath it.

Never close the grill door when the grill is on.

The Ovens

The clock must be set to the time of day before the ovens will work. See the following section on *'The Clock'* for instructions on setting the time of day.

References to 'left-hand' and 'right-hand' ovens apply as viewed from the front of the appliance.

The left-hand oven is a multifunction oven **(Fig. 2.12)**. The right-hand oven is a fan oven **(Fig. 2.13)**.

The Fan Oven

Fan ovens circulate hot air continuously, which means faster, more even cooking. The recommended cooking temperatures for a fan oven are generally lower than those for a non-fan oven.

The Multi-function Oven

Multifunction ovens have an oven fan and oven fan element, as well as two extra heating elements. One element is in the top of the oven and the second is under the oven base. Take care to avoid touching the top element and element deflector when placing or removing items from the oven.

The multifunction oven has 3 main cooking functions: **fan**, **fan assisted** and **conventional cooking**. These functions should be used to complete most of your cooking.

The **browning element** and **base heat** can be used in the latter part of the cooking process to fine tune the results to your particular requirements.

Use **fanned grilling** for all your grilling needs and **defrost** to safely thaw small items of frozen food.

Table 2.4 gives a summary of the multifunction modes.

The multifunction oven has many varied uses. We suggest you keep a careful eye on your cooking until you are familiar with each function. Remember, not all functions will be suitable for all food types.

Note: Please remember that all cookers vary so temperatures in your new ovens may differ to those in your previous cooker.

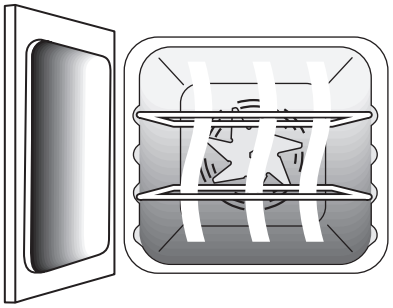

Fig. 2.12

Multi-function oven

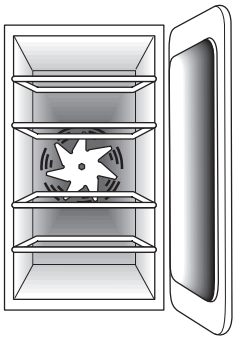

Fig. 2.13

Tall fan oven

Function	Use
Rapid Response	To pre-heat the oven faster than normal
Defrost	To thaw small items in the oven without heat
Fan oven	A full cooking function, even heat throughout, great for baking
Fanned grilling	Grilling meat and fish with the door closed
Fan assisted	A full cooking function good for roasting and baking
Conventional oven	A full cooking function for roasting and baking in the lower half of the oven
Browning element	To brown and crisp cheese topped dishes
Base heat	To crisp up the bases of quiche, pizza or pastry

Table 2.4

Multi-function Oven Functions

Rapid Response

The Rapid Response setting enables you to preheat the oven faster than normal. It uses the fan oven element with additional heat from one of the elements in the top of the oven. Fan ovens heat up quickly; but the Rapid Response feature speeds this process up enabling you to start cooking sooner.

To use the Rapid Response feature, turn the function control knob to **R** and set the temperature required. The light on the control panel next to the function control will come on.

When the required temperature is reached the top element will switch off and the light will go out.

The oven temperature is then maintained by the fan oven element and fan.

Should you choose to place food into the cold oven prior to cooking while using the Rapid Response function, make sure that cakes, etc. are not positioned too near the top of the oven.

Fan Oven

This function operates the fan and the heating element around it. An even heat is produced throughout the oven, allowing you to cook large amounts quickly.

Fan oven cooking is particularly suitable for baking on several shelves at one time and is a good 'all-round' function. It may be necessary to reduce the temperature by approximately 10 °C for recipes previously cooked in a conventional oven.

If you wish to preheat the oven, wait until the indicator light has gone out before inserting the food.

Fanned Grilling

This function operates the fan whilst the top element is on. It produces a more even, less fierce heat than a conventional grill. For best results, place the food to be grilled, on a trivet over a roasting tin, which should be smaller than a conventional grill pan. This allows greater air circulation. Thick pieces of meat or fish are ideal for grilling in this way, as the circulated air reduces the fierceness of the heat from the grill.

The oven door should be kept closed while grilling is in progress, so saving energy.

You will also find that the food needs to be watched and turned less than for normal grilling. Preheat this function before cooking.

For best results we recommend that the grill pan is not located on the uppermost shelf.

Fan Assisted Oven

This function operates the fan, circulating air heated by the elements at the top and the base of the oven. The combination of fan and conventional cooking (top and base heat) makes this function ideal for cooking large items that need thorough cooking, such as a large meat roast.

It is also possible to bake on two shelves at one time, although they will need to be swapped over during the cooking time, as the heat at the top of the oven is greater than at the base, when using this function.

This is a fast intensive form of cooking; keep an eye on the food cooking until you have become accustomed to this function.

Conventional Oven (Top and Base Heat)

This function combines the heat from the top and base elements. It is particularly suitable for roasting and baking pastry, cakes and biscuits.

Food cooked on the top shelf will brown and crisp faster than on the lower shelf, because the heat is greater at the top of the oven than at the base, as in 'Fan assisted oven' function. Similar items being cooked will need to be swapped around for even cooking. This means that foods requiring different temperatures can be cooked together, using the cooler zone in the lower half of the oven and hotter area to the top.

The exposed top element may cook some foods too quickly, so we recommend that the food be positioned in the lower half of the oven to cook. The oven temperature may also need to be lowered.

Browning Element

This function uses the element in the top of the oven only. It is a useful function for the browning or finishing of pasta dishes, vegetables in sauce, shepherds pie and lasagne, the item to be browned being already hot before switching to the top element.

Base Heat

This function uses the base element only. It will crisp up your pizza or quiche base or finish off cooking the base of a pastry case on a lower shelf. It is also a gentle heat, good for slow cooking of casseroles in the middle of the oven or for plate warming.

The Browning and Base Heat functions are useful additions to your oven, giving you flexibility to finish off items to perfection.

Defrost

This function operates the fan to circulate cold air only. Make sure the temperature control is at 0°C and that no heat is applied. This enables small items such as desserts, cream cakes and pieces of meat, fish and poultry to be defrosted.

Defrosting in this way speeds up the process and protects the food from flies. Pieces of meat, fish and poultry should be placed on a shelf, over a tray to catch any drips. Be sure to wash the shelf and tray after defrosting.

Defrost with the oven door closed.

Large items, such as whole chickens and joints should not be defrosted in this way. We recommend this be carried out in a refrigerator.

Defrosting should not be carried out in a warm oven or when an adjoining oven is in use or still warm.

Make sure that dairy foods, meat and poultry are completely defrosted before cooking.

Operating the Ovens

Multi-function Oven

The multi-function oven has two controls: a function selector and a temperature selector (**Fig. 2.14**).

Turn the function selector to a cooking function. Turn the temperature selector to the temperature required (**Fig. 2.15**).

The oven indicator light will glow until the oven has reached the temperature you selected (**Fig. 2.15**). It will then cycle on and off during cooking as the oven maintains the selected temperature.

Fan Oven

Turn the temperature selector to the desired temperature (**Fig. 2.16**).

The oven indicator light will glow until the oven has reached the temperature you selected (**Fig. 2.16**). It will then cycle on and off during cooking as the oven maintains the selected temperature.

Main Oven Light

Press the button to turn the light on (**Fig. 2.17**). If the oven light fails, turn off the power supply before changing the bulb. See the '*Troubleshooting*' section for details on how to change the bulb.

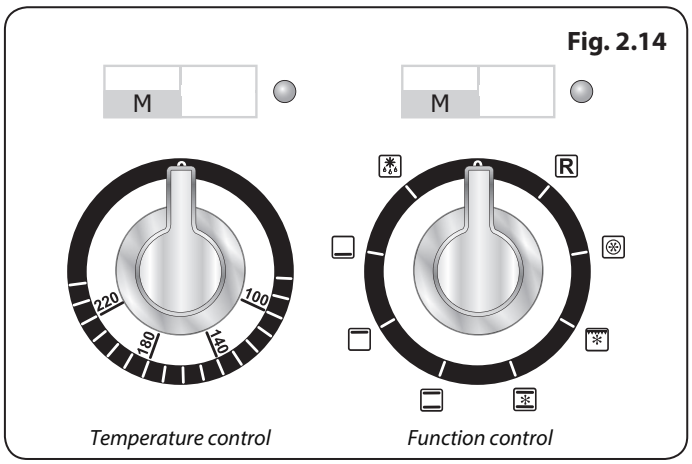

Fig. 2.14

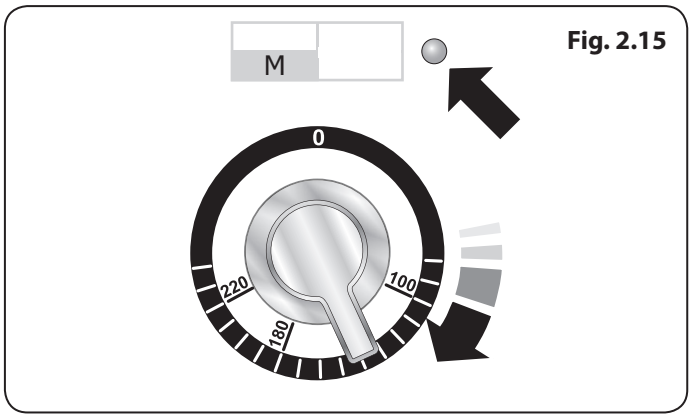

Fig. 2.15

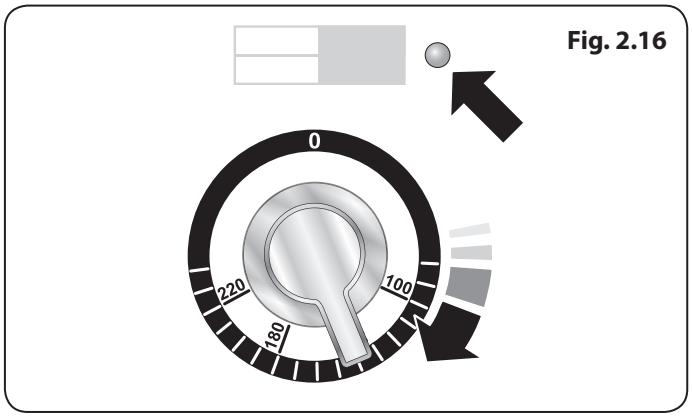

Fig. 2.16

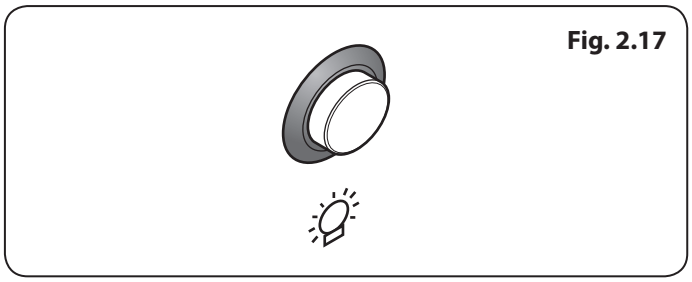

Fig. 2.17

Fig. 2.18

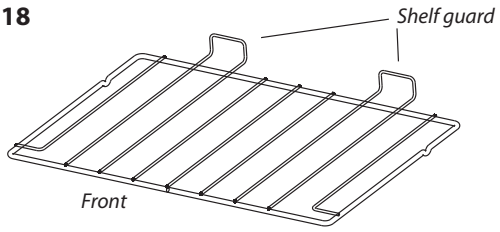

Fig. 2.19

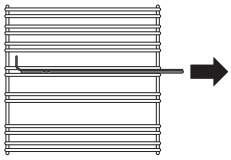

Fig. 2.20

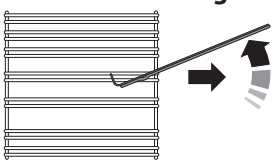

Fig. 2.21

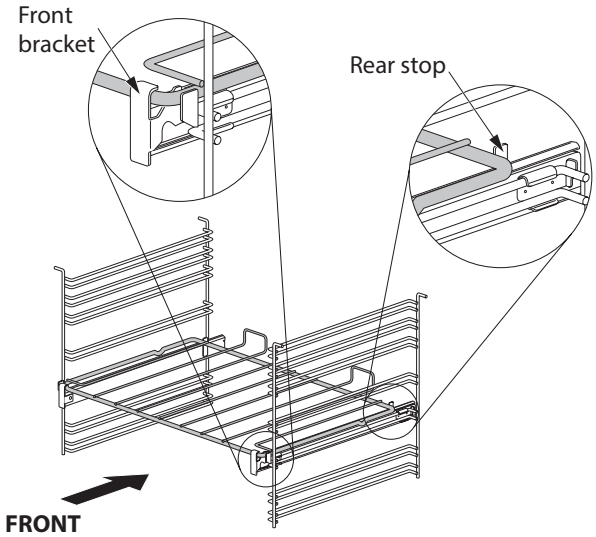

Fig. 2.22

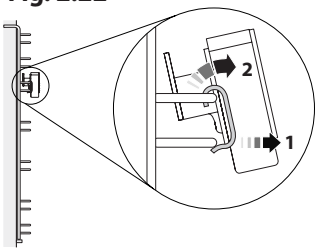

Fig. 2.23

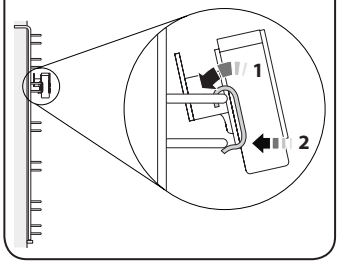

Fig. 2.24

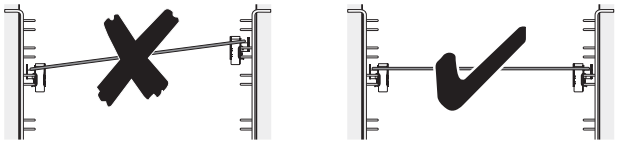

Fig. 2.25

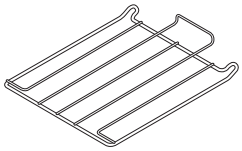

Fig. 2.26

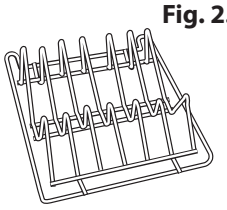

Accessories

Oven Shelves – Left-hand (main) Oven

The oven shelves (**Fig. 2.18**) are retained when pulled forward but can be easily removed and refitted.

Pull the shelf forward until the back of the shelf is stopped by the shelf stop bumps in the oven sides (**Fig. 2.19**).

Lift up the front of the shelf so the back of the shelf will pass under the shelf stop and then pull the shelf forward (**Fig. 2.20**).

To refit the shelf, line up the shelf with a groove in the oven side and push the shelf back until the ends hit the shelf stop. Lift up the front so the shelf ends clear the shelf stops, and then lower the front so that the shelf is level and push it fully back.

Glide-out Shelf - Left-hand (Main) Oven

As well as standard shelves, the left-hand oven is supplied with a set of runners for a glide-out oven shelf.

To fit the glide-out shelf, hook the front of the shelf onto the runners as shown (**Fig. 2.21**). The rear of the shelf should rest on the runners, in front of the rear stop (**Fig. 2.21**).

The glide-out shelf and runners can be easily removed or repositioned.

To remove the glide-out shelf

Raise the rear of the shelf, so that it clears the rear stops. Then unhook from the front locating bracket.

To remove the glide-out runners

Twist to unclip the base of the runners from the shelf supports. Then unhook the runner from the top rung of the shelf support and remove (**Fig. 2.22**).

To refit the glide-out runners

Hook the rear of the runner over the top rung of a pair of shelf supports. Then hook the front of the runner onto the same rung. Push to clip under the bottom rung (**Fig. 2.23**).

Ensure that the shelf runners are fitted in the same position on each side (**Fig. 2.24**).

The front of the shelf runners can be identified by the bracket (**Fig. 2.21**).

⚠ **DO NOT put the glide-out shelf runners in a dishwasher.**

Oven Shelves – Right-hand (Tall) Oven

The tall oven is supplied with four flat cooking shelves (**Fig. 2.25**), and a plate-warming shelf (**Fig. 2.26**).

When using the tall oven, you can cook on all four shelves at the same time, but make sure that they are well spaced out allow the hot air to circulate.

3. 3-button clock

The clock must be set to the time of day before the oven will work.

Using the clock

You can use the clock to turn the programmable oven on and off. **The clock must be set to the time of day before the oven will work**.

NOTE: When using the timer functions, first set the clock as required before setting the oven temperature.

The oven can be switched on when the cook symbol [♨] is displayed.

Setting the clock

1. The LCD clock is shown in (**Fig. 3.1**). Once the cooker is connected and switched on, the display flashes (00.00) and the time starts from (00.00).
2. To set the clock press the [+] and [-] buttons simultaneously, the point between hours and minutes will start to flash for 5 seconds. Whilst the point is flashing press either the [+] or [-] button to set the correct time.

IMPORTANT: The timed oven will not operate unless the clock has been set.

Program selection - Setting the minute minder

The minute minder [🔔] provides the ability to set a countdown from 00:01h to 23:59h, at the end of which an alarm will sound.

1. Press the mode [M] button once (**Fig. 3.2**). The bell symbol [🔔] will flash on the display. Select the desired countdown from 00:01h to 23:59h using the [+] button (**Fig. 3.3**). The countdown will automatically begin and the [🔔] symbol will show in the display.
2. Once the specified time has elapsed an alarm will sound.
3. To stop the alarm press any button.

Re-set the minute minder

To re-set the minute minder, first select the minute minder program by pressing the mode [M] button. Then press the [+] and [-] buttons simultaneously.

- The 'cook period', which is the length of time you want the oven to cook for (dur).
- The 'stop time', which is the time of day you want the oven to stop cooking (End).

To stop the programmable oven at a specific time of day

1. Press the mode [M] button 3 times, until the display flashes 'End' (**Fig. 3.4**).
2. Select the 'stop time' using the [+] or [-] buttons. The display will show the current time along with the 'AUTO' and Cooking [♨] symbols (**Fig. 3.5**).

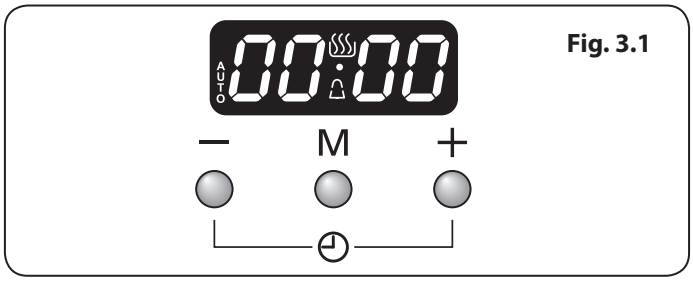

Fig. 3.1

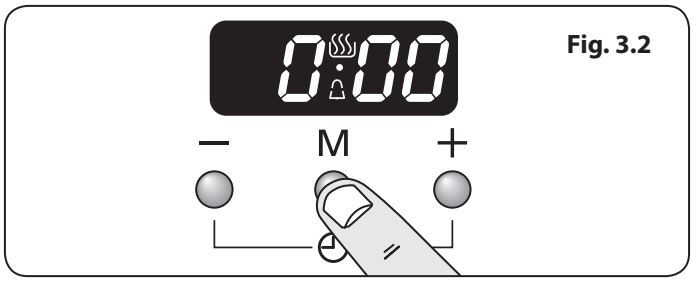

Fig. 3.2

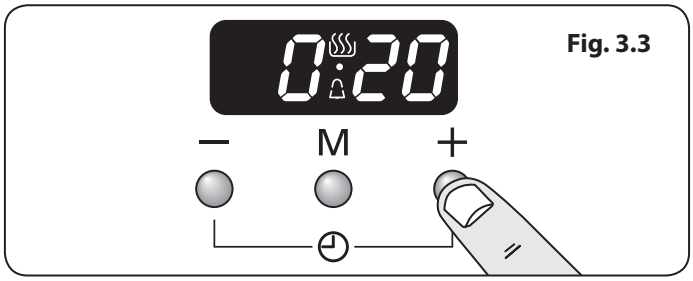

Fig. 3.3

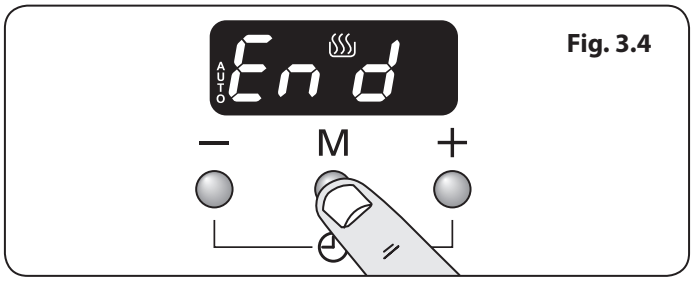

Fig. 3.4

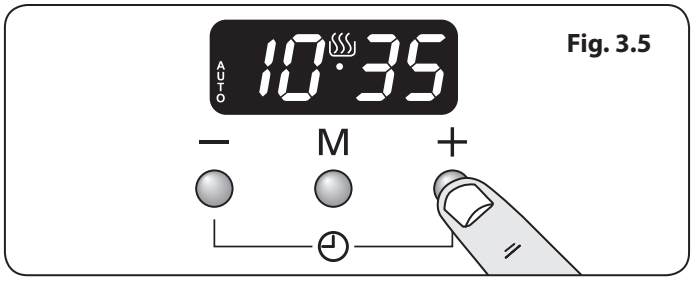

Fig. 3.5

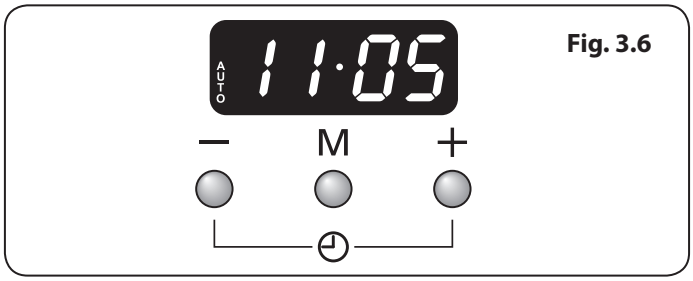

Fig. 3.6

Fig. 3.7

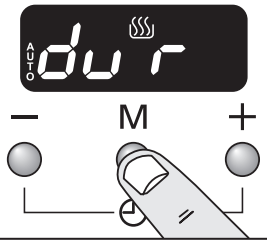

Fig. 3.8

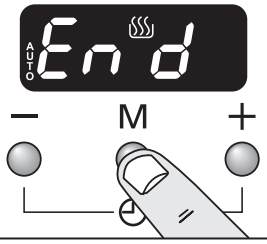

Fig. 3.9

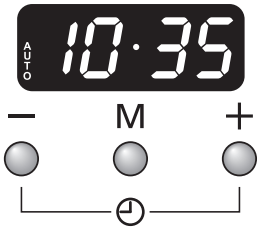

Fig. 3.10

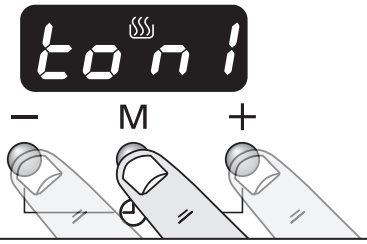

Fig. 3.11

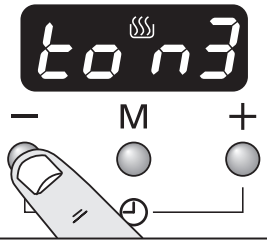

3. When the 'stop time' is reached an alarm will sound and the oven will stop working. The word 'AUTO' will flash on the display (**Fig. 3.6**).
4. Press any button to stop the alarm and return to manual cooking. If the alarm is not stopped, it will stop automatically after 7 minutes.

To start and then stop the programmable oven

Set the programmable oven to automatically start and stop using a combination of the 'cook period' and 'stop time'.

You cannot set a start time directly – this is set automatically by a combination of the 'cook period' and 'stop time'.

1. Press the mode [M] button until the display flashes 'dur' (**Fig. 3.7**). Then set the 'cook period' using the [+] or [-] buttons.
2. Press the mode [M] button until the display flashes 'End' (**Fig. 3.8**). Then set the 'stop time' using the [+] or [-] buttons. Current time will be displayed along with the word 'AUTO' (**Fig. 3.9**).
3. Set the oven to the required cooking temperature.
4. During the 'cook period' the cook symbol [♨] is illuminated in the display.
5. When cooking is finished an alarm will sound. Press any button to stop the alarm and return to manual cooking. If the alarm is not stopped, it will stop automatically after 7 minutes.

AUTO is showing, but you want to revert to manual cooking

You can cancel any automatic settings by pressing the [+] and [-] buttons simultaneously.

Changing the frequency of the alarm

It is possible to change the alarm frequency.

1. Press the the [+] and [-] buttons simultaneously, then the mode [M] button. The display will show 'ton1,2 or 3' (**Fig. 3.10**).
2. To select the tone press the [-] button until desired tone is reached (**Fig. 3.11**).

4. Cooking tips

Using Your Induction Cooker

If you have not used an induction cooker before please be aware of the following:

- Make sure that the pans you have or buy are suitable for use on the induction hob. Stainless steel, enamelled steel or cast iron is ideal. Double check before you buy pans – they must have bases that would attract a magnet.
- Allow time to get used to induction cooking; it is fast and powerful as well as being gentle. When simmering, you may notice that liquids appear to stop bubbling and then start again almost immediately. This is perfectly normal.
- You may notice a faint vibrating sound coming from the pans when using the induction hob. Again, this is perfectly normal and will depend upon the type and style of pans you are using.
- The induction heating elements will phase on and off when cooking. Although an active cooking zone may appear to switch on and off, a constant heat is still being supplied to the base of the pan – this is completely normal.

Tips on cooking with the timer

If you want to cook more than one dish, choose dishes that require approximately the same cooking time. However, dishes can be 'slowed down' slightly by using small containers and covering them with aluminium foil, or 'speeded up' slightly by cooking smaller quantities or placing them in larger containers.

Very perishable foods such as pork or fish should be avoided if a long delay period is planned, especially in hot weather.

⚠ **DO NOT place warm food in the oven to be timed.**

⚠ **DO NOT use a timed oven that is already warm.**

⚠ **DO NOT use the timed oven if the adjoining oven is already warm.**

Whole poultry must be thoroughly defrosted before being placed in the oven. Check that meat and poultry are fully cooked before serving.

General oven tips

The wire shelves should always be pushed firmly to the back of the oven.

Baking trays with food cooking on them should be placed level with the front edge of the oven's wire shelves. Other containers should be placed centrally. Keep all trays and containers away from the back of the oven, as overbrowning of the food may occur.

For even browning, the maximum recommended size of a baking tray are:

- depth: 340 mm (13 ⅜") by width: 340 mm (13 ⅜") in the main oven
- depth: 321 mm (12 ⅝") by width: 232 mm (9 ⅛") in the tall oven.

When the oven is on, DO NOT leave the door open for longer than necessary, otherwise the knobs may get very hot.

- Always leave a "finger's width" between dishes on the same shelf. This allows the heat to circulate freely around them.
- To reduce fat splashing when you add vegetables to hot fat around a roast, dry them thoroughly or brush lightly with cooking oil.
- Where dishes may boil and spill over during cooking, place them on a baking tray.
- The 'Cook & Clean' oven liners (see 'Cleaning Your Cooker') work better when fat splashes are avoided. Cover meat when cooking with foil or use a roasting bag.
- Sufficient heat rises out of the oven while cooking to warm plates in the grill compartment.
- If you want to brown the base of a pastry dish, preheat the baking tray for 15 minutes before placing the dish in the centre of the tray.

5. Cooking table

The oven control settings and cooking times given in the table below are intended to be used **as a guide only**. Individual tastes may require the temperature to be altered to provide a preferred result.

Food is cooked at lower temperature in a fan oven than in a conventional oven. When using recipes, reduce the fan oven temperature by 10 °C and the cooking time by 5-10 minutes. The temperature in the fan oven does not vary with height in the oven so you can use any shelf.

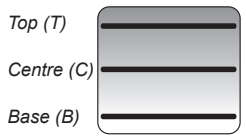

Oven Shelf Positions

Food	Conventional Oven Temperature °C (Shelf Position)	Fan Oven Temperature °C	Approximate Cooking Time	
Meat				
Beef (no bone)	160 (C)	150	30-35 minutes per 500g +30-35 minutes.	*Thoroughly thaw frozen joints before cooking. Meat may be roasted at 220°C (210°C for fan oven) and the cooking time adjusted accordingly. For stuffed and rolled meats, add approximately 10 minutes per 500g, or cook at 200°C (190°C) for 20 minutes then 160°C (150°C) for the remainder.*
	200 (C)	190	20-25 minutes per 500g +20-25 minutes.	
Lamb	160 (C)	150	30-35 minutes per 500g +30-35 minutes.	
	200 (C)	190	25-30 minutes per 500g +25-30 minutes.	
Pork	160 (C)	150	35-40 minutes per 500g +35-40 minutes.	
	200 (C)	190	25-30 minutes per 500g +25-30 minutes.	
Poultry				
Chicken	160 (C)	150	20-25 minutes per 500g +20-25 minutes.	*For stuffed poultry, you could cook at 200°C (190°C) for 20 minutes then 160°C (150°C) for remainder. Do not forget to include the weight of the stuffing. For fresh or frozen prepacked poultry, follow instructions on the pack. Thoroughly thaw frozen poultry before cooking.*
	200 (C)	190	15-20 minutes per 500g +15-20 minutes.	
Turkey	160 (C)	150	20 minutes per 500g +20 minutes.	
	200 (C)	190	15 minutes per 500g +15 minutes.	
Duck	160 (C)	150	25-30 minutes per 500g.	
	200 (C)	190	20 minutes per 500g.	
Casserole	140-150 (C)	130-140	2-4 hours according to recipe.	
Yorkshire Pudding	220 (C)	210	Large tins 30-35 minutes; individual 10-20 minutes.	
Cake				
Very rich fruit - Christmas, wedding, etc.	140 (C/B)	130	45-50 minutes per 500g of mixture.	*Using the conventional oven: when two tier cooking leave at least one runner space between shelves. Position the baking tray with the front edge along the front of the oven shelf.*
Fruit 180 mm tin	150 (C/B)	140	2-2½ hours.	
Fruit 230 mm tin	150 (C/B)	140	Up to 3½ hours.	
Madeira 180 mm	160 (C/B)	150	80-90 minutes.	
Queen cakes	190 (C/B)	180	15-25 minutes.	
Scones	220 (C/B)	210	10-15 minutes.	
Victoria sandwich				
180 mm tin	180 (C/B)	170	20-30 minutes.	
210 mm tin	180 (C/B)	170	30-40 minutes.	*Up to three tiers can be cooked in a fan oven at the same time but make sure to leave at least one runner space between each shelf being cooked on.*
Desserts				
Shortcrust tarts	200 (C/B)	190	20-30 minutes on a preheated tray.	
Fruit pies	200 (C/B)	190	35-45 minutes.	
Tartlets	200 (C/B)	190	10-20 minutes according to size.	
Puff pastry	210 (C/B)	200	20-40 minutes according to size.	
Meringues	100 (C/B)	90	2-3 hours.	*Using the conventional oven: for even browning the maximum size of baking tray recommended is 340 mm x 340 mm. This ensures free heat circulation. If cooking a two tier load, the trays should be interchanged approximately halfway though the cooking time.*
Baked egg custard	160 (C/B)	150	45-60 minutes.	
Baked sponge pudding	180 (C/B)	170	40-45 minutes.	
Milk pudding	140-150 (C/B)	130-140	2 to 3 hours.	
Bread	210 (C)	200	20-30 minutes.	
Fish	Fanned Grilling			
Fillet	190 (C/B)	190 (C/B)	15-20 minutes.	
Whole	190 (C/B)	190 (C/B)	15-20 minutes per 500g.	
Steak	190 (C/B)	190 (C/B)	Steaks according to thickness.	

6. Cleaning your cooker

Isolate the electricity supply before carrying out any major cleaning. Then allow the cooker to cool.

NEVER use paint solvents, washing soda, caustic cleaners, biological powders, bleach, chlorine based bleach cleaners, coarse abrasives or salt.

DO NOT mix different cleaning products – they may react together with hazardous results.

All parts of the cooker can be cleaned with hot soapy water – **but take care that no surplus water seeps into the appliance**.

Remember to switch the electricity supply back on and reset the clock before re-using the cooker.

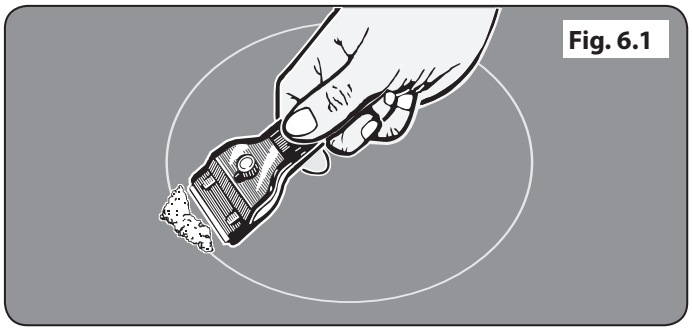

Fig. 6.1

Hob

Daily care

First of all, be sure that all heat indicator lights are off and that the cooking surface is cool. Apply a small dab of ceramic cleaning cream in the centre of each area to be cleaned. Dampen a clean paper towel and work the cream onto the cooking surface. As a final step, wipe the cooking surface with a clean, dry paper towel.

Cleaning spills

For spills and boil-overs that occur while cooking, turn off the unit and wipe the area surrounding the hot zone with a clean paper towel. If a spill (other than a sugary substance) is on the hot zone, do not clean until the unit has completely cooled down, and then follow the instructions below, 'Cleaning Burned-on Spills'.

If you accidentally melt anything on the surface, or if you spill foods with a high sugar content (preserves, tomato sauce, fruit juice, etc.), remove the spill IMMEDIATELY with a razor scraper, while the unit is still hot.

IMPORTANT: Use an oven glove to protect your hand from potential burns.

Scrape the major spill or melted material from the cooking zone and push into a cold area. Then, turn the unit 'OFF' and allow to cool before cleaning further. After the cooking surface cools down and the heat indicator lights go off, follow the 'Daily Care' procedure outlined above.

Cleaning burned-on spills

Make sure that the heat indicator lights are off and that the hob is cool. Remove the excess burned-on substance with a single-edged razor scraper. Hold the scraper at an angle of about 30° to the surface and then scrape off the burned-on matter (**Fig. 6.1**).

Once you have removed as much as possible with the scraper, follow the 'Daily Care' procedure outlined above.

Fig. 6.2

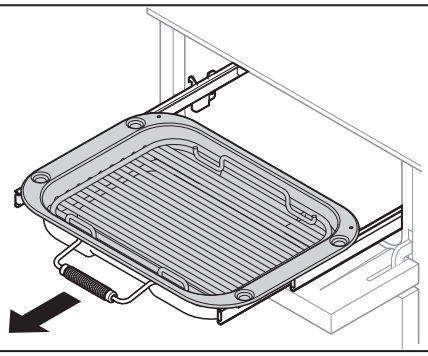

Fig. 6.3

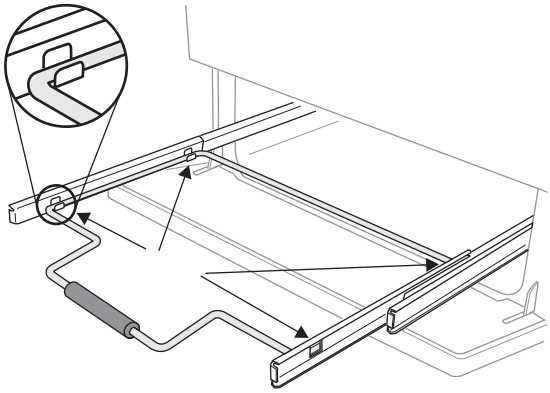

Fig. 6.4

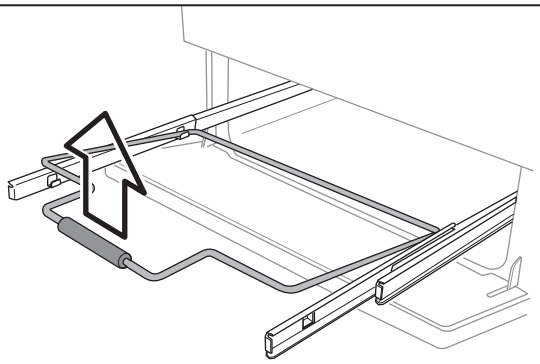

Fig. 6.5

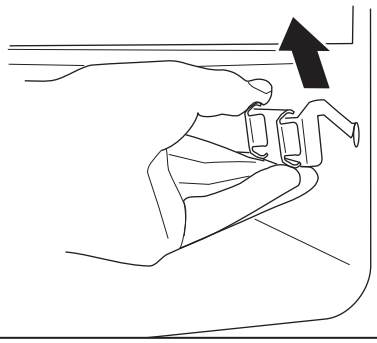

Grills

The grill pan and trivet should be washed in hot soapy water. After grilling meats or any foods that soil, leave to soak for a few minutes immediately after use. Stubborn particles may be removed from the trivet using a nylon brush. Alternatively, the grill pan can be washed in a dishwasher.

Before you remove any of the grill parts for cleaning, make sure that they are cool, or use oven gloves.

DO NOT use any abrasive substances.

Removing the glide-out grill pan

The glide-out grill pan can be easily removed for cleaning as follows: Remove the grill pan support frame by pulling the grill pan forward (**Fig. 6.2**).

Lift the grill pan clear of the support frame. The support frame is held to the side rails by two clips on each side (**Fig. 6.3**).

For each side, support the side rail with one hand and with the other hand lift the frame up and out of the side clips (**Fig. 6.4**).

For safety, push the side rails back into the grill chamber.

If you need to remove the side rails to allow cleaning of the grill chamber, you can unhook them from the grill chamber sides (**Fig. 6.5**) and wipe the sides clean with a soft cloth and mild detergent.

DO NOT put the side runners in a dishwasher.

Once you have finished, hook the side rails back onto the sides of the chamber. To refit the frame, pull the side rails forward and, for each side in turn, support the side rail and press the frame down into the side rails. Replace the grill pan.

Control panel and doors

Avoid using any abrasive cleaners, including cream cleaners. For best results, use a liquid detergent.

The same cleaner can also be used on the doors. Alternatively, use a soft cloth wrung out in clean hot soapy water. You can use the same method for cleaning the control panel and knobs. After cleaning, polish with a dry cloth.

Glass fronted door panels

The oven door front panels can be taken off so that the glass panels can be cleaned. Move the cooker forward to gain access to the sides (see the 'Moving the Cooker' section under 'Installation').

Open the oven door slightly and remove the front panel fixing screws from the door sides, two each side (**Fig. 6.6**).

Carefully lift off the outer door panel. The inside face of the glass panels can now be cleaned – take care not to disturb or wet the door insulation.

NOTE: If the door is triple glazed then the inner two panels are fixed together and should not be separated. After cleaning, carefully refit the outer door panel and replace the side fixing screws.

DO NOT use harsh abrasive cleaners or sharp metal scrapers to clean the oven door glass since they can scratch the surface, which may result in shattering of the glass.

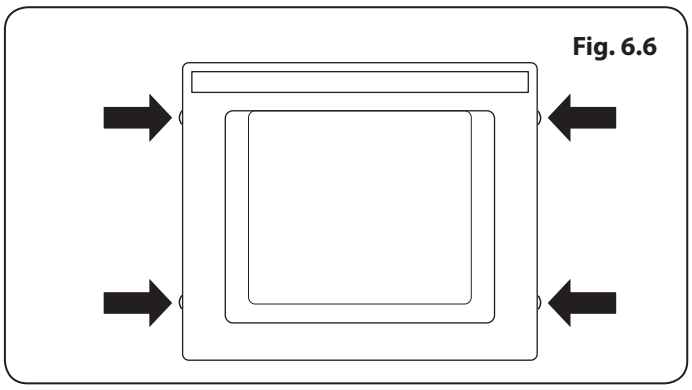
Fig. 6.6

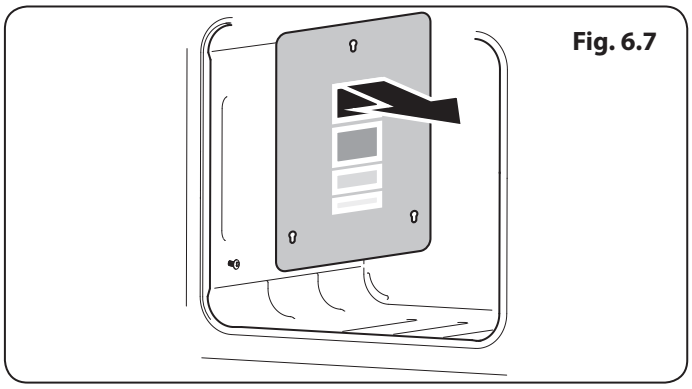
Fig. 6.7

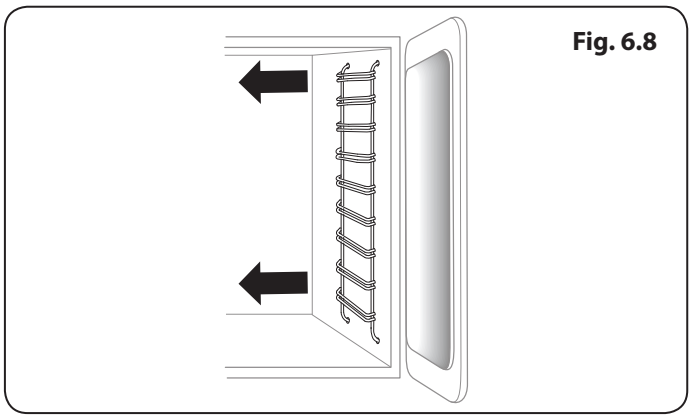
Fig. 6.8

Ovens

The oven door front panels can be taken off so that the glass panels can be cleaned. Move the cooker forward to gain access to the sides (see the 'Moving the Cooker' section under 'Installation').

'Cook & Clean' Panels

The ovens have side 'Cook & Clean' panels which have been coated with a special enamel that partly cleans itself. This does not stop all marks on the lining, but helps to reduce the amount of manual cleaning needed.

These panels work better above 200 °C. If you do most of your cooking below this temperature, occasionally remove the panels and wipe with a lint free cloth and hot soapy water. The panels should then be dried and replaced and the oven heated at 200 °C for about one hour. This will make sure that the panels are working effectively.

Removing the panels to clean the enamel interior

Some of the lining panels can be removed for cleaning.

If you wish to clean the enamel interior of the oven, you will need to remove the shelves before removing the 'Cook & Clean' panels. To remove the side panels, simply lift the panel and slide forwards. (**Fig. 6.7**).

Once the panels have been removed, the oven enamel interior can be cleaned.

DO NOT use steel wool, oven cleaning pads, or any other materials that will scratch the surface.

Refit in the reverse order.

Tall oven

To clean the oven sides, slide out the shelves, unhook the supports from the oven sides and lift out (**Fig. 6.8**).

Cleaning table

Cleaners listed (**Table 6.1**) are available from supermarkets or electrical retailers as stated.

For enamelled surfaces use a cleaner that is approved for use on vitreous enamel.

Regular cleaning is recommended. For easier cleaning, wipe up any spillages immediately.

Hotplate		
Part	**Finish**	**Recommended Cleaning Method**
Hob top	Enamel or stainless steel	Hot soapy water, soft cloth. Any stubborn stains remove gently with a nylon scourer.
Ceramic/Induction hob	Toughened glass	Hot soapy water; cream cleaner/scourer if necessary.
Griddle plate (some models only)	Non-stick surface	Allow to cool. Wash in hot soapy water. Do not use abrasive cleaners/ scourers. Dishwasher.
Warming zone (some models only)	Toughened glass	Hot soapy water, cream cleaner/scourer if necessary.
Outside of Cooker		
Part	**Finish**	**Recommended Cleaning Method**
Door, door surround and storage drawer exterior	Enamel or paint	Hot soapy water, soft cloth. Any stubborn stains, remove gently with a liquid detergent.
	Stainless steel	E-cloth (electrical retailers) or microfibre all-purpose cloth (supermarket).
Sides and plinth	Painted surface	Hot soapy water, soft cloth.
Splashback/rear grille	Enamel or stainless steel	Hot soapy water, soft cloth. Cream cleaner, with care, if necessary.
Control panel	Paint, enamel or stainless steel	Warm soapy water. Do not use abrasive cleaners on lettering.
Control knobs/handles & trims	Plastic/chrome, copper or lacquered brass	Warm soapy water, soft cloth.
	Brass	Brass polish.
Oven door glass/glass lid (some models only)	Toughened glass	Hot soapy water, cream cleaner/scourer if necessary.
Oven and Grill		
Part	**Finish**	**Recommended Cleaning Method**
Sides, floor & roof of oven NOT COOK & CLEAN OVEN PANELS (see below)	Enamel	Any proprietary oven cleaner that is suitable for enamel. CAUTION: CORROSIVE/CAUSTIC OVEN CLEANERS: FOLLOW MANUFACTURER'S INSTRUCTIONS. Do not allow contact with the oven elements.
Cook & Clean oven panels (some models only)	Special enamel that partly cleans itself	This surface cleans itself at 200 °C and above, or the panels can be removed and washed with hot soapy water and a nylon brush.
Oven shelves, Handyrack, grill trivet, Handygrill rack (some models only)	Chrome	An oven interior cleaner that is suitable for chrome. Soap filled pad. Dishwasher.
Grill pan/meat tin (some models only)	Enamel	Hot soapy water. Soap filled pad. Dishwasher.

Table 6.1

7. Troubleshooting

Interference with and repairs to the hob MUST NOT be carried out by unqualified persons. Do not try to repair the hob as this may result in injury and damage to the hob. Please arrange for repair by a suitably competent person.

NOTE: The induction hob is able to self-diagnose a number of problems and can show this information to the user via the hob control display. Error codes may be displayed if your hob has developed a fault.

If your appliance reports an error or is not working, you may be able to correct the fault by consulting the following.

Error code E2 is displayed

The electronic unit is too hot. Please check the installation of the cooker, making sure that there is sufficient ventilation. In extreme cases, if a cooking utensil has been allowed to boil dry this error code may also be displayed. If in doubt please contact your installer or a qualified repair engineer.

No display operation

Over voltage or loss of supply voltage to the cooker. If in doubt please contact your installer or a qualified repair engineer.

Error code U400 is displayed

The cooker has been incorrectly connected. The control will switch off after approximately 1 second and the error code will be permanently displayed.

Consult your installer or a qualified repair engineer.

Error code Er followed by a number is displayed

The appliance has developed an internal technical fault that cannot be rectified by the user.

Consult your installer or a qualified repair engineer.

The fuse blows or the RCD trips regularly

Please contact your installer or a qualified repair engineer.

The cooker will not switch on

Has the wiring system in the house blown a fuse or tripped an RCD?

Has the cooker been correctly connected to the mains supply?

Has the key lock been activated? Please refer to the key lock section for details of this function.

The induction hob is noisy

When using the induction hob there may be some 'noise' emitted from the pan. This is normal and may be most noticeable when cooking on high power settings or if 5 pans are used simultaneously. The type of pan may also contribute to induction 'noise'.

The cooling fan

The induction hob incorporates a cooling fan. This cooling fan is active when either the grill or the oven(s) are on. Under certain conditions, the cooling fan may remain active when the grill or oven(s) are switched off. This is normal and the fan will switch off automatically.

The fascia gets hot when I use the oven

If the fascia becomes excessively hot when the cooker is in use then the cooling fan may have failed. Should this occur please contact your installer, a qualified repair engineer or Customer Service to arrange for its repair.

A crack has appeared in the hob surface

Disconnect the cooker immediately from the power supply and arrange for its repair. Do not use the cooker until after the repair.

My hob is scratched

Always use the cleaning methods recommended in this guide, and make sure that the pan bottoms are smooth and clean.

Marks from mineral deposits from water or food can be removed with a cleaning cream. However, tiny scratches are not removable but will become less visible in time as a result of cleaning.

The oven fan is noisy

The note of the oven fan may change as the oven heats up – this is perfectly normal.

The knobs get hot when I use the oven or grill. Can I avoid this?

Yes, this is caused by heat rising from the oven or the grill, and heating them up. Do not leave the oven door open. Make sure that the grill pan is pushed right back to the 'back stop' when grilling.

ALWAYS grill with the grill compartment door open.

DO NOT leave the oven door open.

If there is an installation problem and I don't get my original installer to come back to fix it, who pays?

You do. Service organisations will charge for their call-outs if they are correcting work carried out by your original installer. Therefore, it's in your own interest to keep track of this installer so that you can contact them as required.

Fig. 7.1

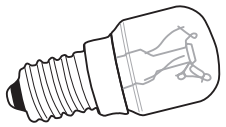

Fig. 7.2

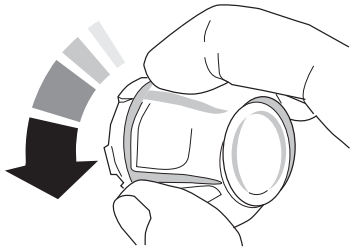

Fig. 7.3

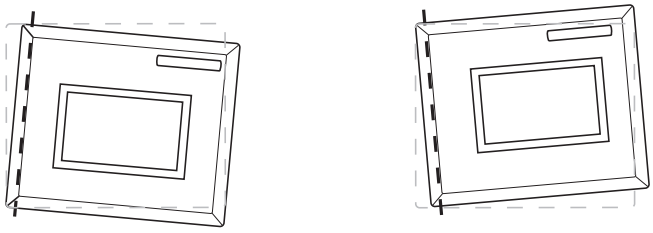

Effect of hinge adjustment – exagerrated for clarity

Fig. 7.4

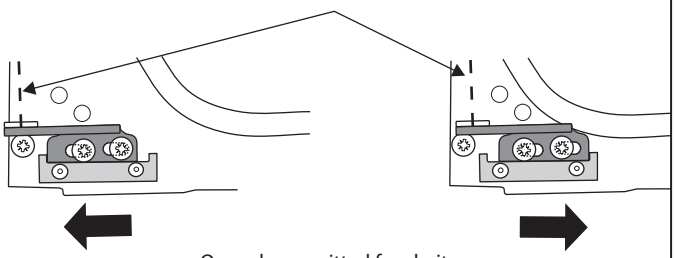

Oven door omitted for clarity

Food is cooking too slowly, too quickly, or burning

Cooking times may differ from your previous oven. Check that you are using the recommended temperatures and shelf positions – see the oven cooking guide. Then adjust the settings according to your own individual tastes.

The oven light is not working

The bulb has probably blown. You can buy a replacement bulb (which is not covered under the guarantee) from most electrical stores. Ask for an Edison screw fitting 15 W 230 V lamp, FOR OVENS (**Fig. 7.1**). It must be a special bulb, heat resistant to 300 °C.

Before removing the existing bulb, turn off the power supply and make sure that the oven is cool. Open the oven door and remove the oven shelves.

Locate the bulb cover and unscrew it by turning it counter-clockwise – it may be very stiff (**Fig. 7.2**).

Taking care to protect your fingers with a glove in case the bulb should shatter, unscrew the old bulb.

Screw in the new bulb clockwise and then screw the bulb cover back on. Turn on the electricity supply and check that the bulb now lights.

The oven door is misaligned

The bottom hinge of the left hand oven door can be adjusted to alter the angle of the door (**Fig. 7.3**). Loosen the bottom hinge fixing screws and use the notch and a flat bladed screwdriver to move the position of the hinge to set the hinge position (**Fig. 7.4**).

Retighten the hinge screws.

The oven is not cooking evenly

DO NOT use a baking tray with dimensions larger than those specified in the section on 'General Oven Tips'.

If you are cooking a large item, be prepared to turn it round during cooking.

If two shelves are used, check that space has been left for the heat to circulate. When a baking tray is put into the oven, make sure that it is placed centrally on the shelf.

Check that the door seal is not damaged and that the door catch is adjusted so that the door is held firmly against the seal.

A dish of water when placed on the shelf should be the same depth all over. (For example, if it is deeper at the back, then the back of the cooker should be raised up or the front lowered.) If the cooker is not level, arrange for your supplier to level it for you.

Power failure

In the event of a failure in the electrical supply, remember to reset the clock so that the timed oven continues to operate.

The timed oven is not coming on when turned on manually

Is the power on? Is the clock illuminated? If not, there may be something wrong with the power supply. Is the cooker supply on at the isolator switch?

Has the time of day been set?

The timed oven is not coming on when automatic cooking

Has the oven knob been left in the OFF position by mistake?

Oven temperature getting hotter as the cooker gets older

If turning the temperature down using the oven control knob has not worked, or has only worked for a short time, then you may need a new thermostat. This should be fitted by a service person.

8. Installation

Dear Installer

Before you start your installation, please complete the details below, so that, if your customer has a problem relating to your installation, they will be able to contact you easily.

Installer's Name
Installer's Company
Installer's Telephone Number
Appliance Serial Number

Safety Requirements and Regulations

⚠ **This cooker must be installed in accordance with the relevant instructions in this booklet, with the relevant national and local regulations, and with the local electricity supply companies' requirements.**

⚠ **The appliance must be installed in accordance with the regulations in force and only in a well ventilated space.**

⚠ **Read the instructions before installing or using this appliance.**

Provision of Ventilation

This appliance is not connected to a combustion products evacuation device. Therefore, particular attention must be given to the relevant requirements regarding ventilation.

All rooms require a window that can be opened, or equivalent, while some rooms require a permanent vent in addition to the window.

Location of Cooker

The cooker may be installed in a kitchen/kitchen diner but **NOT** in a room containing a bath or shower.

⚠ **This appliance is designed for domestic cooking only. Use for any other purpose could invalidate any warranty or liability claim.**

You will need the following equipment to complete the cooker installation satisfactorily:

- Multimeter (for electrical checks).

You will also need the following tools:

1. Steel tape measure
2. Cross-head screwdriver
3. Flat-bladed screwdriver
4. Spirit level
5. Pencil
6. Adjustable spanner
7. Allen keys (supplied)
8. 13 mm spanner or socket wrench

Checking the parts:

Grill pan and trivet	2 flat oven shelves
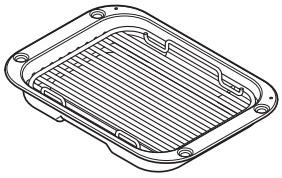	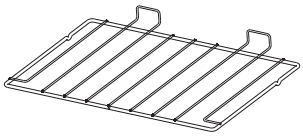
Tall oven shelves and shelf supports plate warmer	Stability location bracket
	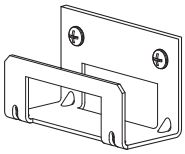
Plinth	
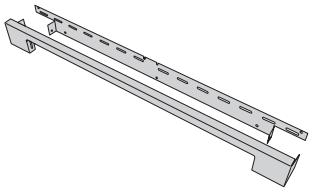	

Positioning the Cooker

Fig. 8.1 and **Fig. 8.2** show the minimum recommended distance from the cooker to nearby surfaces.

The cooker should not be placed on a base.

The hotplate surround should be level with, or above, any adjacent work surface. A gap of 75 mm should be left between each side of the cooker Above the hotplate level and any adjacent vertical surface.

For non-combustible surfaces (such as unpainted metal or ceramic tiles), this can be reduced to 25 mm.

A minimum space of 650 mm is required between the top of the hob and a horizontal combustible surface.

**Any cookerhood should be installed in accordance with the hood manufacturer's instructions.*

***Any splashback must be fitted in accordance with the manufacturers instructions. Allowance should be made for the additional height of the flue trim, which is fitted to the cooker hob.*

Surfaces of furniture and walls at the sides and rear of the appliance should be heat, splash and steam resistant. Certain types of vinyl or laminate kitchen furniture are particularly prone to heat damage and discolouration. We cannot accept responsibility for damage caused by normal use of the cooker to any material that de-laminates or discolours at temperatures less than 65 °C above room temperature.

We recommend a gap of 1010 mm between units to allow for moving the cooker. **DO NOT** box the cooker in – it must be possible to move the cooker in and out for cleaning and servicing.

If the cooker is near a corner of the kitchen, a clearance of 130 mm is required to allow the oven doors to open (**Fig. 8.3**). The actual opening of the doors is slightly less, but this allows for some protection of your hand as you open the door.

Moving the Cooker

⚠ **On no account try and move the cooker while it is plugged into the electricity supply.**

⚠ **The cooker is very heavy, so take great care.**

We recommend that two people manoeuvre the cooker. Make sure that the floor covering is firmly fixed, or removed, to prevent it being disturbed when moving the cooker around.

To help you, there are two levelling rollers at the back, and two screw-down levelling feet at the front.

Remove the polystyrene base pack. From the front, tilt the cooker backwards and remove the front half of the polystyrene base (**Fig. 8.4**). Repeat from the back and remove the rear half of the polystyrene base.

Fig. 8.1

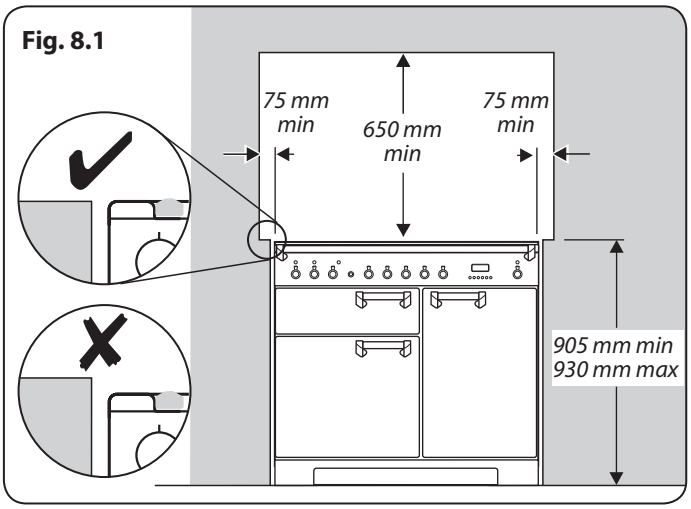

Fig. 8.2

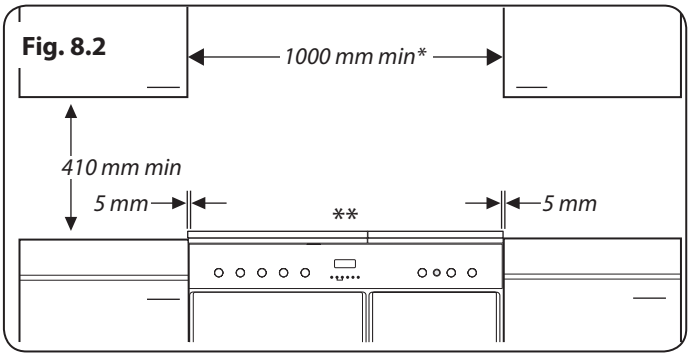

Fig. 8.3

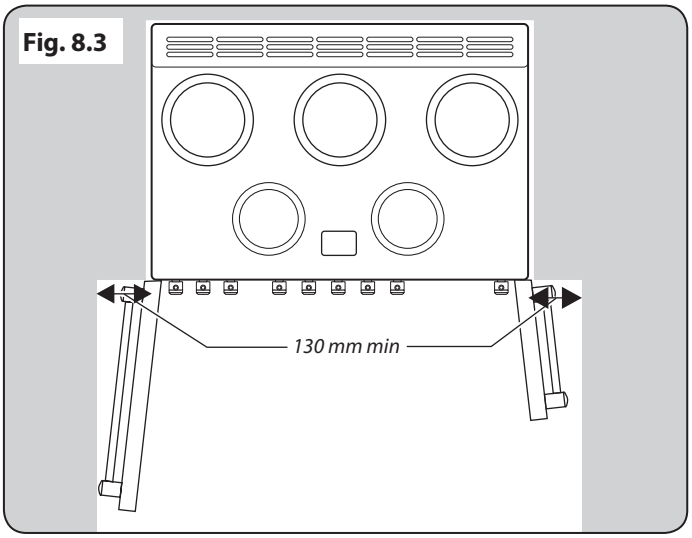

Fig. 8.4

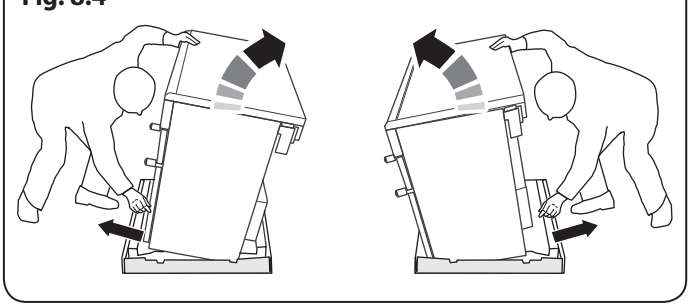

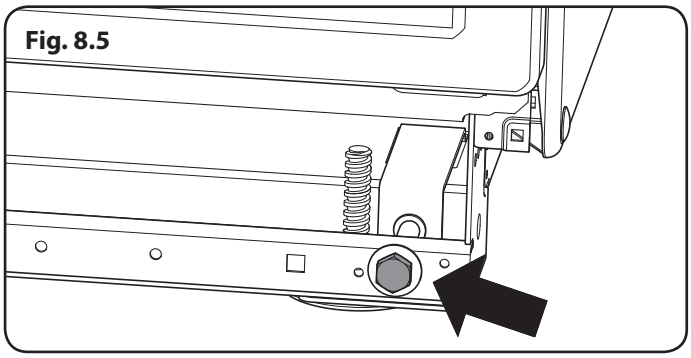
Fig. 8.5

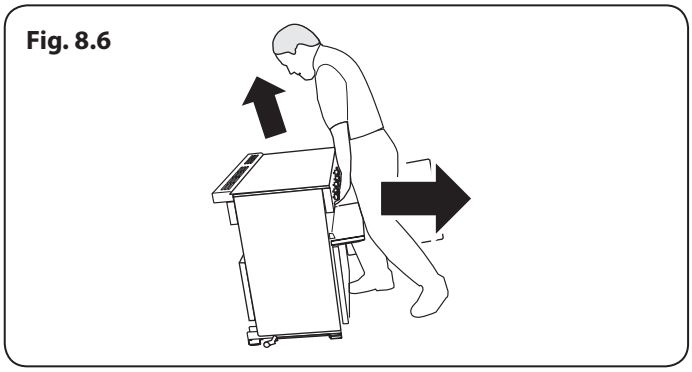
Fig. 8.6

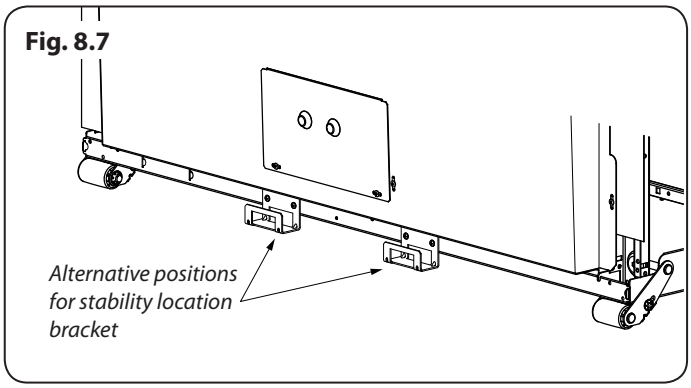

Fig. 8.7

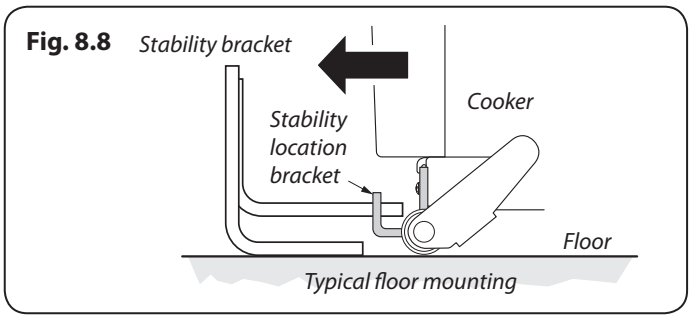

Fig. 8.8

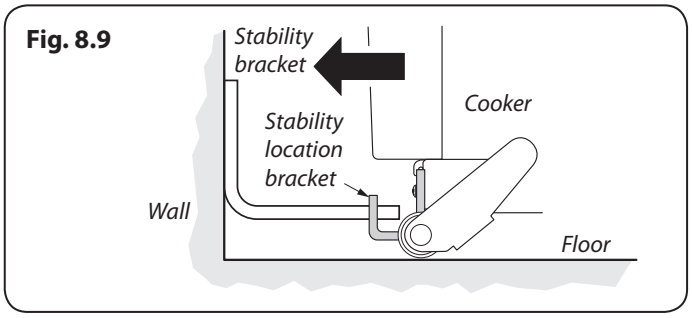

Fig. 8.9

Lowering the Two Rear Rollers

To adjust the height of the rear of the cooker, first fit a 13 mm spanner or socket wrench onto the hexagonal adjusting nut **(Fig. 8.5)**.

Rotate the nut – clockwise to raise – counter-clockwise to lower. Make 10 complete (360°) turns clockwise.

Make sure you lower BOTH REAR ROLLERS.

Completing the Move

Unfold the rear edge of the cardboard base tray. Open the grill door and right-hand oven door so that you can get a good grip on the bottom of the fascia panel as you move the oven **(Fig. 8.6)**.

Carefully push the cooker backwards off the base tray. Remove the base tray.

Position the cooker close to its final position, leaving just enough space to get behind it.

DO NOT use the door handles or control knobs to manoeuvre the cooker.

Fitting the Stability Bracket

These are not supplied with the cooker but are available at most builders' merchants.

We recommend using a stability bracket; first attach the bracket location device to the rear of the cooker **(Fig. 8.7)**. Then adjust the bracket to engage through the slot of the device (**Fig. 8.8** and **Fig. 8.9**).

Repositioning the Cooker Following Connection

If you need to move the cooker once it has been connected, make sure it is switched off at the supply switch before gripping under the fascia panel and lifting the front of the cooker slightly (**Fig. 8.6**). Check behind the cooker to make sure that the electricity cable is not caught.

As you progress, always make sure that the cable has sufficient slack to allow the cooker to move.

When you replace the cooker, check behind it again once more to make sure that the electricity cable is not caught or trapped.

Levelling the Cooker

Place the cooker in its intended position. Take care not to twist it within the gap between the kitchen units, as otherwise, damage may occur to the cooker or units.

There are two screw-down feet at the front and two levelling rollers at the rear, which can be used to adjust the height and level of the cooker.

It is recommended that you use a spirit level on a shelf in one of the ovens to check for level.

Electrical Connection

The cooker must be installed by a qualified electrician, in accordance with all relevant British Standards/Codes of Practice (in particular BS 7671), or with the relevant national and local regulations.

WARNING: THE APPLIANCE MUST BE EARTHED.

NOTE: The cooker must be connected to the correct electrical supply as stated on the voltage label on the cooker, through a suitable cooker control unit incorporating a double-pole switch, having a contact separation of at least 3 mm in all poles.

The cooker MUST NOT be connected to an ordinary domestic power point.

Access to the mains terminal is gained by removing the electrical terminal cover box on the back panel. Connect the mains cable to the correct terminals for your electrical supply type (**Fig. 8.10** and **Fig. 8.11**). Check that the connections are correctly fitted and that the terminal screws are tight. Secure the mains cable using the cable clamp.

Current Operated Earth Leakage Breakers

The combined use of your cooker and other domestic appliances may cause nuisance tripping, so we recommend that the cooker is protected on an individual RCD (Residual Current Device) or RCBO (Residual Current Breaker with Overload).

IF IN DOUBT, PLEASE CONSULT A SUITABLY QUALIFIED ELECTRICIAN.

Fig. 8.10

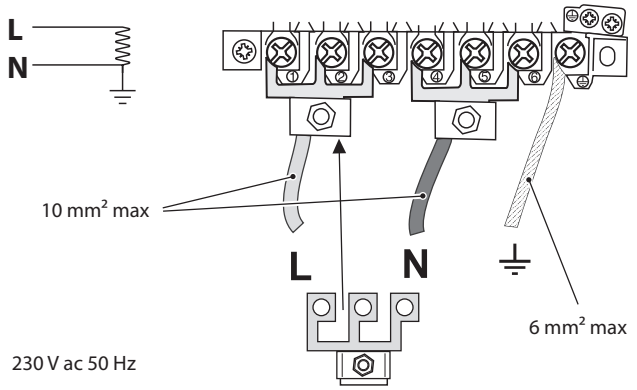

Fig. 8.11

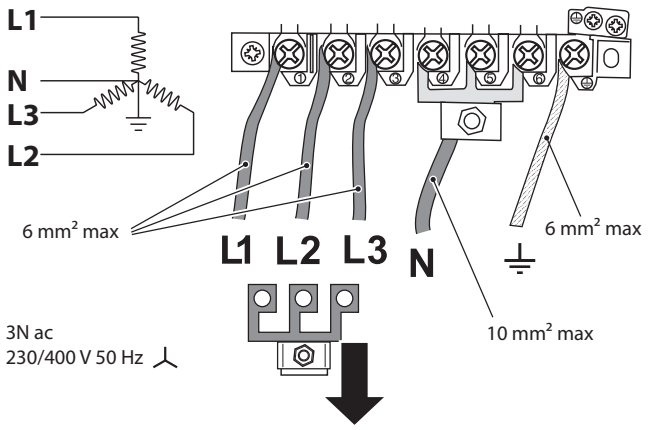

Fig. 8.12

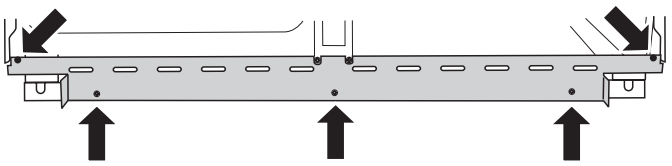

Fig. 8.13

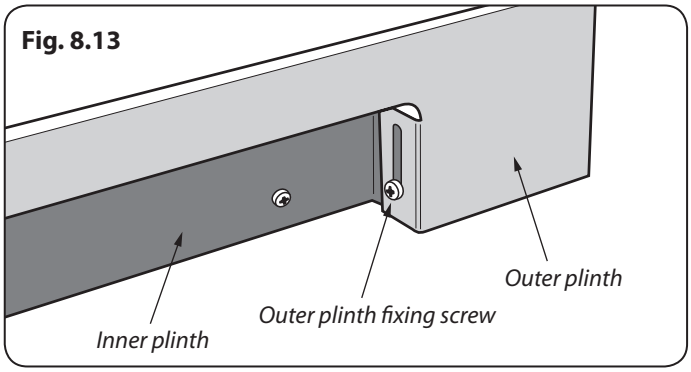

Final Fitting

Fitting the 2-piece Plinth

Fit the inner plinth to the bottom front of the cooker using the 4 or 5 screws provided (**Fig. 8.12**).

Fit the outer plinth (2 screws, 1 each end) to the inner plinth. The height of the outer plinth can be adjusted by sliding it up or down via the slotted hole (**Fig. 8.13**).

WARNING: When moving the cooker ensure that the outer plinth is removed. Failure to do so may result in damage to plinth and floor.

Final Checks

Hob Check

Check each cooking zone in turn. Be sure to use pans of the correct size and material.

Grill Check

Turn on the grill control and check that the grill heats up.

Oven Check

Set the clock as described earlier, and then turn on the oven. Check the oven fans start to turn and that the oven heats up.

Customer Care

Installer: Please complete your details in this guide, inform the user how to operate the cooker and hand over the instructions.

Thank you.

9. Circuit Diagrams

Hob

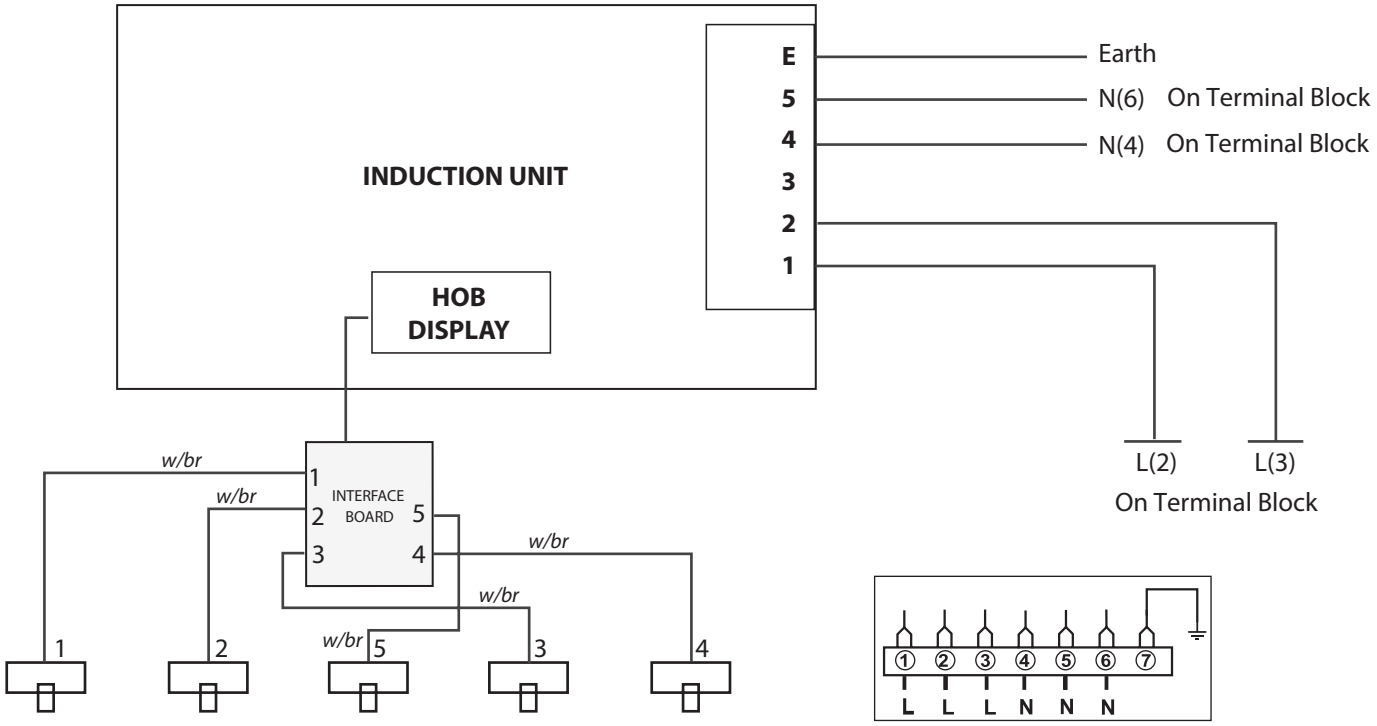

Code	Description
1	Left-hand front element
2	Left-hand back element
3	Right-hand back element
4	Right-hand front element
5	Centre element

Code	Colour
w/br	White or brown

Multifunction Oven

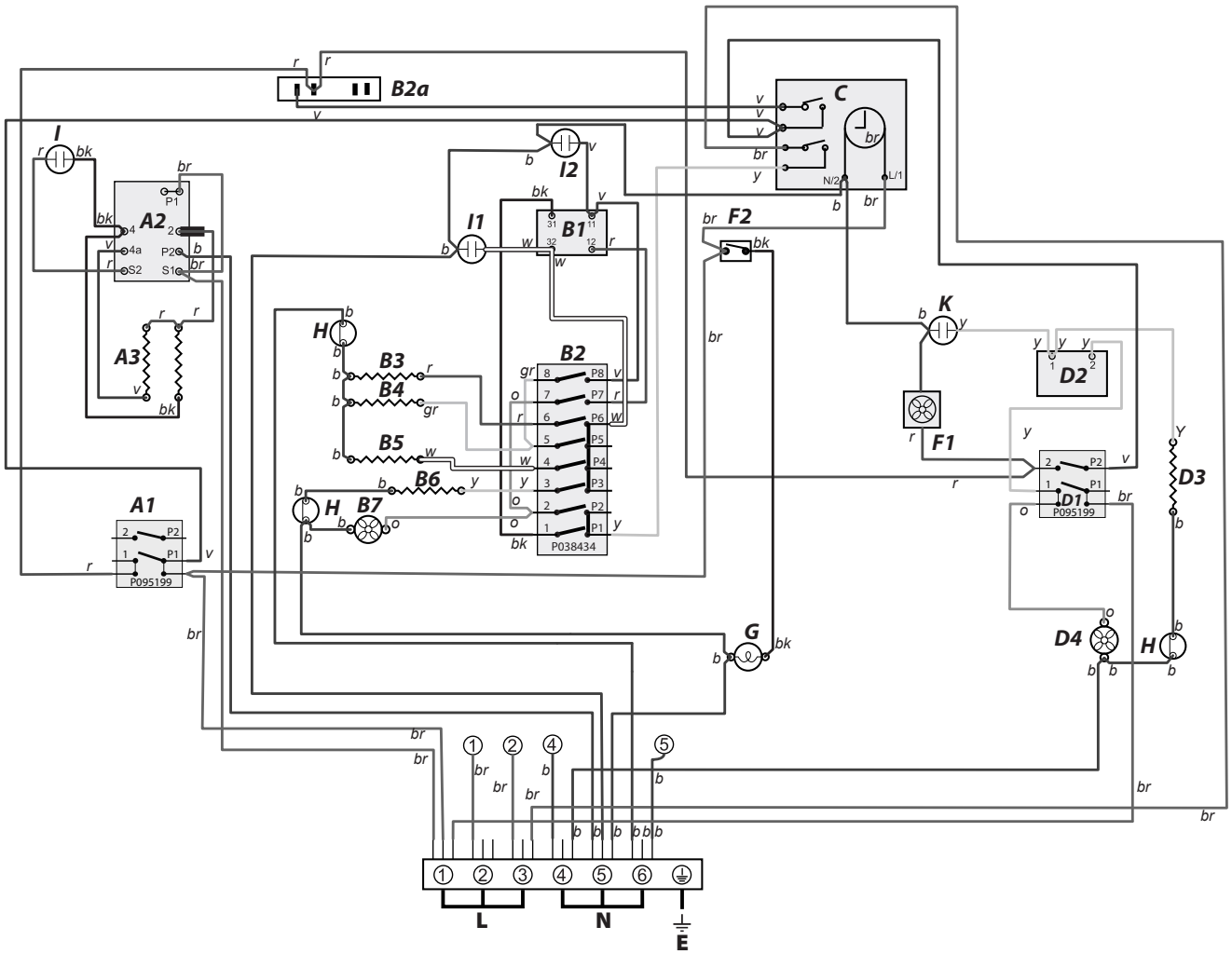

Legend

The connections shown in the circuit diagram are for single-phase. The ratings are for 230 V 50 Hz.

Code	Description
A1	Grill front switch
A2	Grill energy control
A3	Grill elements
B1	Multi-function oven thermostat
B2	Multi-function oven control
B2a	Multi-function oven thermostat front switch
B3	Left-hand multi-function oven base element
B4	Left-hand multi-function oven top element (outer pair)
B5	Left-hand multi-function oven browning element (inner pair)
B6	Left-hand multi-function oven fan element
B7	Left-hand multi-function oven fan
C	Clock

Code	Description
D1	Right-hand fan oven thermostat
D2	Right-hand fan oven control
D3	Right-hand fan oven element
D4	Right-hand fan oven fan
F1	Cooling fan
F2	Oven light switch
G	Oven light(s)
H	Thermal cut-out
I	Grill neon
I1	Multi-function oven neon
I2	Rapid heat-up neon
K	RH oven neon

Code	Colour
b	Blue
br	Brown
bk	Black
or	Orange
r	Red
v	Violet
w	White
y	Yellow
g/y	Green/yellow
gy	Grey

10. Technical Data

INSTALLER: Please leave these instructions with the user.

DATA BADGE LOCATION: Cooker back, serial number repeater badge below the oven door opening.

COUNTRY OF DESTINATION: GB, IE.

Connection

Electric	230 / 400 V ~ 50 Hz 3N

Dimensions

Model	Encore Deluxe 100 Induction	
Total height	Min 905 mm	Max 930 mm
Total width	994 mm	
Total depth:	608 mm excluding handles, 650 mm including handles	

Ratings

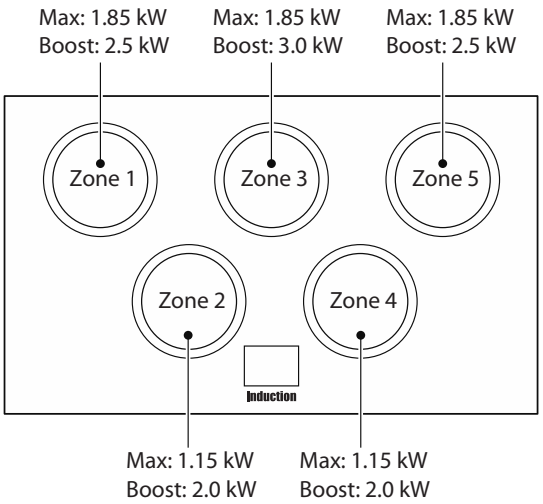

Hotplate energy saving tips

Use cookware with a flat base.

Use the correct size cookware.

Use cookware with a lid.

Minimise the amount of liquid or fat.

When liquid starts boiling, reduce the setting.

Oven energy saving tips

Cook meals together, if possible.

Keep the pre-heating time short.

DO NOT lengthen cooking time.

DO NOT open the oven door during the cooking period.

DO NOT forget to turn the appliance off at the end of cooking.

CE

Hotplate Efficiency Data

Brand	Rangemaster
Model Identification	Encore Deluxe
Size	100
Type	Induction

Type of Hob	Induction
Number of electric zones	5
Zone 1 - Ø cm	18.5
Heating Technology	
Energy Consumption (ECElectric cooking) - Wh/kg	172
Zone 2 - Ø cm	15.5
Heating Technology	
Energy Consumption (ECElectric cooking) - Wh/kg	180
Zone 3 - Ø cm	18.5
Heating Technology	
Energy Consumption (ECElectric cooking) - Wh/kg	172
Zone 4 - Ø cm	15.5
Heating Technology	
Energy Consumption (ECElectric cooking) - Wh/kg	180
Zone 5 - Ø cm	18.5
Heating Technology	
Energy Consumption (ECElectric cooking) - Wh/kg	172
Zone 6 - Ø cm	-
Heating Technology	
Energy Consumption (ECElectric cooking) - Wh/kg	-
Energy Consumption (ECElectric hob) - Wh/kg (*)	175

Information marked thus (*) is not required with mixed fuel hobs

Oven Data

Brand		Rangemaster
Model identification		Encore Deluxe
Mass	kg	114
Type of oven		Electric
Number of cavities		2
Left-hand Efficiency		
Fuel type		Electric
Cavity type		Multifunction
Power - conventional	kW	2.2
Power - forced air convection	kW	2.5
Volume	Litres	73
Energy consumption (electricity) - conventional	kWh / cycle	1.08
Energy consumption (electricity) - forced air convection	kWh / cycle	0.91
Energy efficiency index - conventional		126.1
Energy efficiency index - forced air convection		106.2
Energy class		A
Right-hand Efficiency		
Fuel type		Electric
Cavity type		Fanned
Power - conventional	kW	-
Power - forced air convection	kW	2.5
Volume	Litres	82
Energy consumption (electricity) - conventional	kWh / cycle	-
Energy consumption (electricity) - forced air convection	kWh / cycle	0.79
Energy efficiency index - conventional		-
Energy efficiency index - forced air convection		88.3
Energy class		A

Additional Information	
The oven complies with EN 60350-1	
Maximum output @ 230V 50Hz	
Conventional	-
Multifunction	-
Multifunction (with Rapid Response)	3.7 kW
Forced Air Convection	2.5 kW
Grill	2.3 kW
Slow Oven	-
Bread Proving Drawer	-

Maximum total electrical load at 230 V (approximate total including hob, oven lights, oven fan, etc.):	16 kW

NOTE

Name of Appliance & Colour*				
Appliance Serial Number*				
Fuel Type*	Natural Gas	☐	LP Gas	☐
	Dual Fuel	☐	Electric	☐
Retailer's Name & Address				
Date of Purchase				
Installer's Name & Address				
Installer's Telephone Number				
Date of Installation				

*This information is on the appliance data badge - look in the appliance instructions to find out where the data badge is located.

CONSUMER SERVICE

If you have any product enquiries, or in the event of a problem with your appliance once it has been installed, please telephone 0800 804 6261 or 0370 789 5107 from a mobile.

CONSUMER SERVICE LINES OPEN:

Monday to Thursday 8am–6pm
Friday 8am–5pm

WARRANTY

Your manufacturer warranty covers goods of our own brand for defective workmanship and materials for a period of 1 year from the date of purchase. This warranty covers mechanical breakdown and proven cosmetic and manufacturing defects.

You will receive an additional FREE full 12 months guarantee by registering your purchase using the FREEPOST form provided. Alternatively, call free on 0800 587 5747, quoting reference RMGX57A, or register online at www.rangemaster.co.uk.

Any damage, blemishes or chips identified upon receipt of the product must be reported within 90 days – proof of purchase may be required to establish validity. Scratches on the surface of ceramic hobs must be reported within 14 days. Scratches caused by usage are not covered. Accidental damage is not covered by the manufacturer's warranty.

For warranty compliance, the requirements are that the appliance:

- Has been correctly installed in accordance with current legislation, relevant British and European Standards and Codes of Practice, by a suitably competent person registered with Gas Safe or equivalent body and, where applicable, a qualified electrician.
- Has been used solely for domestic cooking purposes.
- If in use in the UK*, has not been taken abroad as a personal export. (In the Republic of Ireland conditions may vary, so consult your retailer.)
- Is not second-hand or a refurbished appliance. The manufacturer's warranty is not transferable.
- Has not been subject to misuse, accidental damage or modification, and has not deteriorated due to normal domestic wear and tear, and the manufacturer's recommendations concerning cleaning materials have been followed.
- Has not been repaired by persons or organisations other than those authorised to act on behalf of AGA Rangemaster.

Exceptions:

- Items not included under the free 1 year guarantee include pan supports, griddles, wok rings, baking trays, grill pans, trivets, filters, light bulbs and other consumable accessories.
- Any damage caused other than through normal use.
- Breakdowns associated with cooking spillage.
- Cosmetic deterioration deemed to be normal wear and tear.

This warranty is in addition to your Statutory Rights.

* Only certain models can be adapted for use with Mains Gas supplied in the Channel Islands and Isle of Man.

OUT OF WARRANTY

We recommend that Rangemaster appliances are serviced regularly throughout their life to maintain optimum performance and efficiency. Service work should only be carried out by technically competent and suitably qualified personnel.

For your own safety, always make sure that work is carried out by a Gas Safe registered engineer for gas appliances or an approved electrician for electrical models.

For a competetive quote and to arrange for a Rangemaster approved engineer to attend, call Consumer Services on: 0800 804 6261 or 0370 789 5107 from a mobile.

SPARE PARTS

To maintain optimum and safe performance, we recommend that only genuine Rangemaster spare parts are used. These are available from most major spares stockists, including ourselves.

Contact Consumer Services on 0800 804 6261 or 0370 789 5107 from a mobile, who will be happy to help.

STANDARDS

Rangemaster cookers are designed and manufactured to a recognised international quality standard, which meets the requirements of BS EN ISO 9001, BS EN ISO 14001 and OHSAS 18001 for continually improving environmental procedures.

Rangemaster cookers comply with the essential requirements of the appropriate European Directives, and carry the CE mark.

Designed to impress

The Co-ordinating Collection.

• Refrigeration • Sinks & Taps • Hoods & Splashbacks • Built-in Cooking • Dishwashing

RANGEmaster

Built from experience

Clarence Street
Royal Leamington Spa
Warwickshire
CV31 2AD
England

Consumer Services: +44 (0)800 804 6261 or (0)370 789 5107 from a mobile.
Fax: +44 (0)1926 450526
E-mail: consumers@agarangemaster.co.uk
www.rangemaster.co.uk

For UK Trade Enquiries Tel: +44 (0)115 946 4000
Fax: +44 (0)115 973 6602
E-mail: sales@agarangemaster.co.uk

For ROI Enquiries Tel: 1850 302 502

AGA RANGEmaster

Rangemaster is a trading name of AGA Rangemaster Limited
Registered in England and Wales. Registration No. 354715
Registered Office: c/o Aga Rangemaster, Meadow Lane, Long Eaton, Nottingham, NG10 2GD

Rangemaster continuously seeks improvements in specification, design and production of products and thus, alterations take place periodically. Whilst every effort is made to produce up-to-date literature, this brochure should not be regarded as an infallible guide to current specification, nor does it constitute an offer for the sale of any particular appliance.