INSTALLATION AND USER'S MANUAL

CONTENT

INTRODUCTION	52
SAFETY PRECAUTION	52
SPECIFICATION	55
INSTALLATION (VENT OUTSIDE)	56
INSTALLATION (VENT INSIDE)	67
DESCRIPTION OF COMPONENTS	68
OPERATION	68
MAINTENANCE	73
TROBULESHOOTING	74
CONFORMITY WITH DIRECTIVES	74
ENVIRONMENTAL PROTECTION	75

INTRODUCTION

Thank you for choosing this cooker hood.
This instruction manual is designed to provide you with all required instructions related to the installation, use and maintenance of the appliance. In order to operate the unit correctly and safety, please read this instruction manual carefully before installation and usage.
The cooker hood uses high quality materials, and is made with a streamlined design. Equipped with large power electric motor and centrifugal fan, it also provides strong suction power, low noise operation, non-stick grease filter and easy assembly installation.

SAFETY PRECAUTION

Never let the children operate the machine.
The cooker hood is for home use only, not suitable for barbecue, roast shop and other commercial purpose.
The cooker hood and its filter should be clean regularly in order to keep in good working condition.
Clean the cooker hood according to the instruction manual and keep the unit from danger of burning.
Forbid the direct baking from the gas cooker.
Please keep the kitchen room a good convection.
Before connecting this appliance check that the power supply cord is not damaged. A damage supply cord must be replaced by qualified service personnel only.
There shall be adequate ventilation of the room when the range hood is used at the same time as appliances burning gas or other fuels;

he air must not be discharged into a flue that is used for exhausting fumes from appliances burning gas or other fuels;

Regulations concerning the discharge of air have to be fulfilled.
This appliance if not intended for use by persons(including children) with reduced physical, sensory or mental capabilities, or lack of experience and knowledge, unless they have been given supervision or instruction concerning use of the appliance by a person slide for their safety.
Children should be supervised to ensure that they do not play with the appliance.

Do not flambé under the range hood.
CAUTION: Accessible parts may become hot when used with cooking appliance

- These shall be adequate ventilation of the room when the range hood is used at the same time as appliances burning gas or other fuels(not applicable to appliances that only discharge the air back into the room);

- the details concerning the method and frequency of cleaning.
- there is a fire risk if cleaning is not carried out in accordance with the instructions; - do not flame under the range hood;
- CAUTION:Accessible parts may become hot when used with cooking appliances.

Electrical Shock Hazard

Only plug this unit into a properly earthed outlet. If in doubt seek advice from a suitably qualified engineer.

Failure to follow these instructions can result in death, fire, or electrical shock.

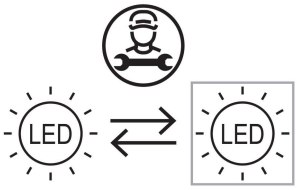

The lamp used in this product is not suitable for use in the lighting of a room.

The purpose of this lamp is to provide illumination for using the product.

Electrical Installation

All installation must be carried out by a competent person or qualified electrician. Before connecting the mains supply ensure that the mains voltage corresponds to the voltage on the rating plate.

Direct Connection

The appliance must be connected directly to the mains using an omnipolar circuit breaker with a minimum opening of 3mm between the contacts.
The installer must ensure that the correct electrical connection has been made and that it complies with the wiring diagram.
The cable must not be bent or compressed.
Regularly check the power plug and power cord for damage. If the supply cord is damaged, it must be replaced by a special cord or assembly available from the manufacturer or its service agent.

WARNING: This is a Class I appliance and MUST be earthed

This appliance is supplied with a 3 core mains cable coloured as follows:
Brown = L or Live
Blue = N or Neutral
Green and Yellow = E or Earth ⏚

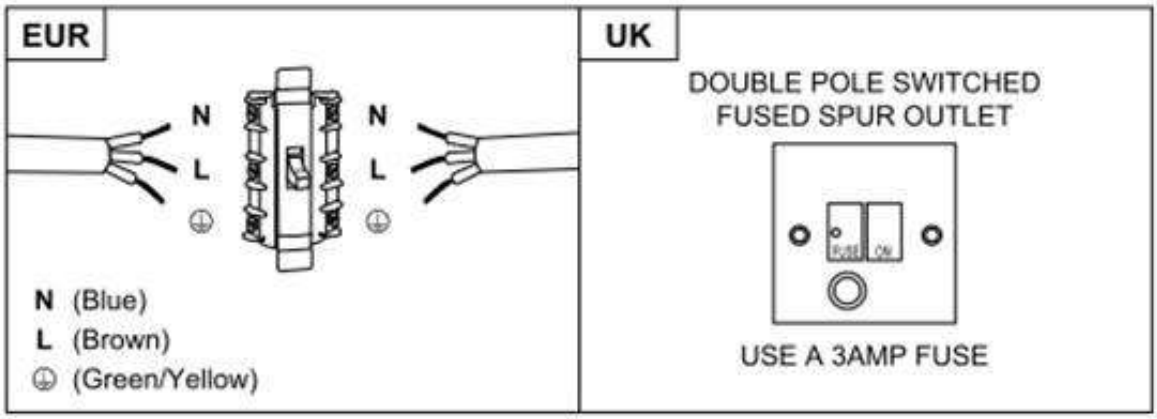

The fuse must be rated at 3 Amps.

Standard Installation Accessories List

Spec.	Illustration Picture	Qty
Casing		1
Upper Chimney		1
Lower Chimney		1
Lower chimney bracket		1
Upper chimney bracket		1
Hanging Board		1
φ8 rawl plugs φ8×φ6 white color		9
Screws ST4.0×30		9
φ7.2screws ST4.0×8		2

INSTALLATION （wall mounting）

If you have an outlet to the outside, your cooker hood can be connected as below picture by means of an extraction duct (enamel, aluminum, flexible pipe or inflammable material with an interior diameter of 150mm)

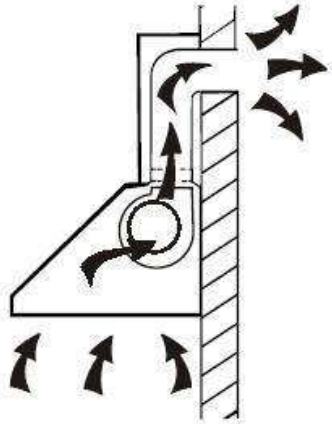

1. Before installation, turn the unit off and unplug it from the outlet.

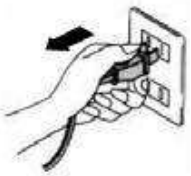

2. The cooker hood should be placed at a distance of 65~75cm above the cooking plane for best effect.

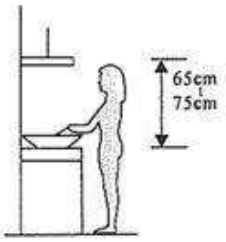

3. Drill 3 x 8mm holes to accommodate the bracket. Screw and tighten the bracket onto the wall with the screws provided.

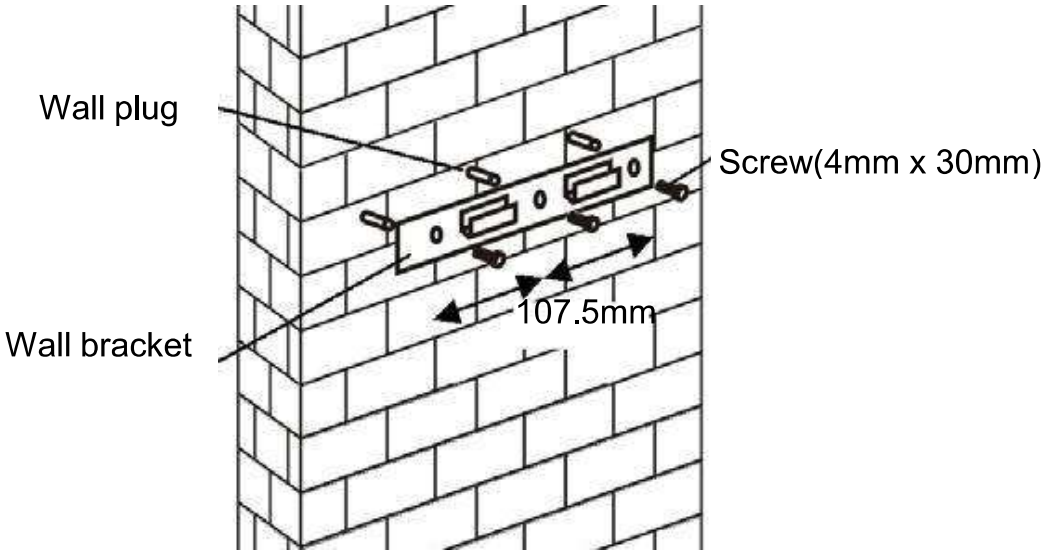

For inclined panel Model

- eed to drill 2x8mm extra holes & fixing screws & screw plugs before installation. Voor schuine modellen

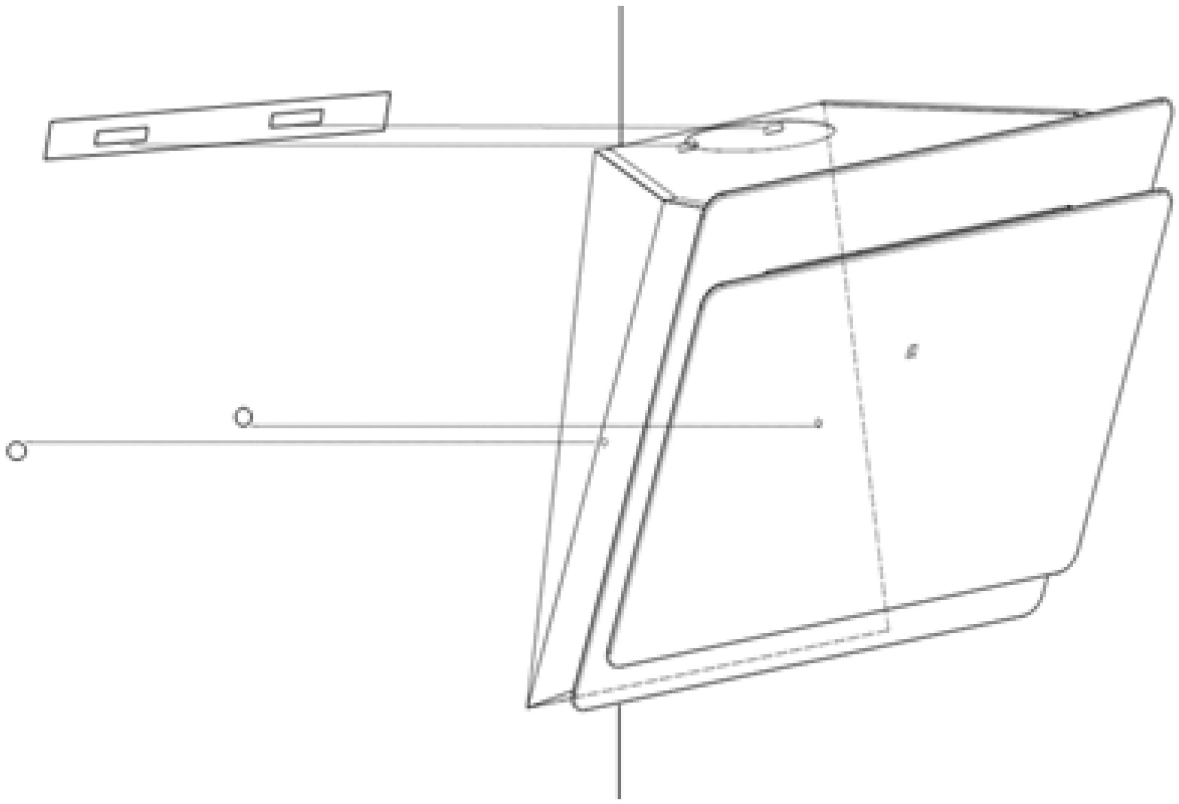

4. Leave up the cooker hood and hang onto the wall bracket hook.

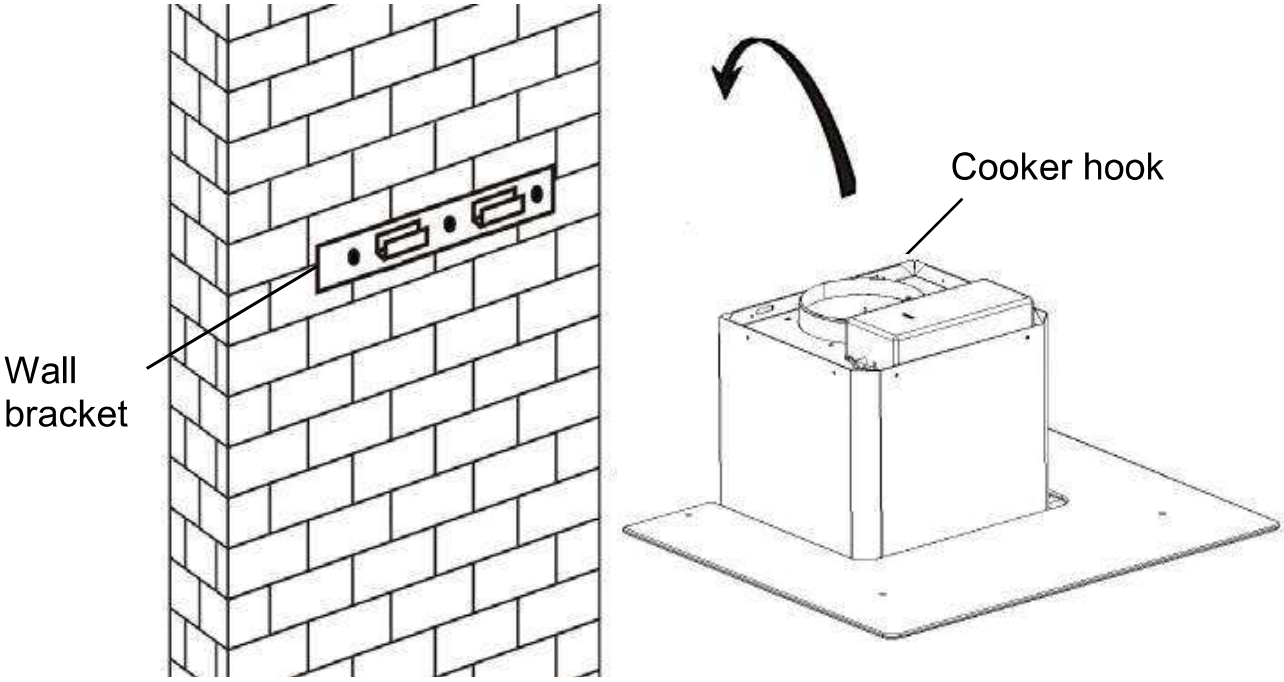

5. Fix the one-way-valve to the air outlet of the cooker hood. Then, attached the exhaust pipe onto the one-way-valve as shown below.

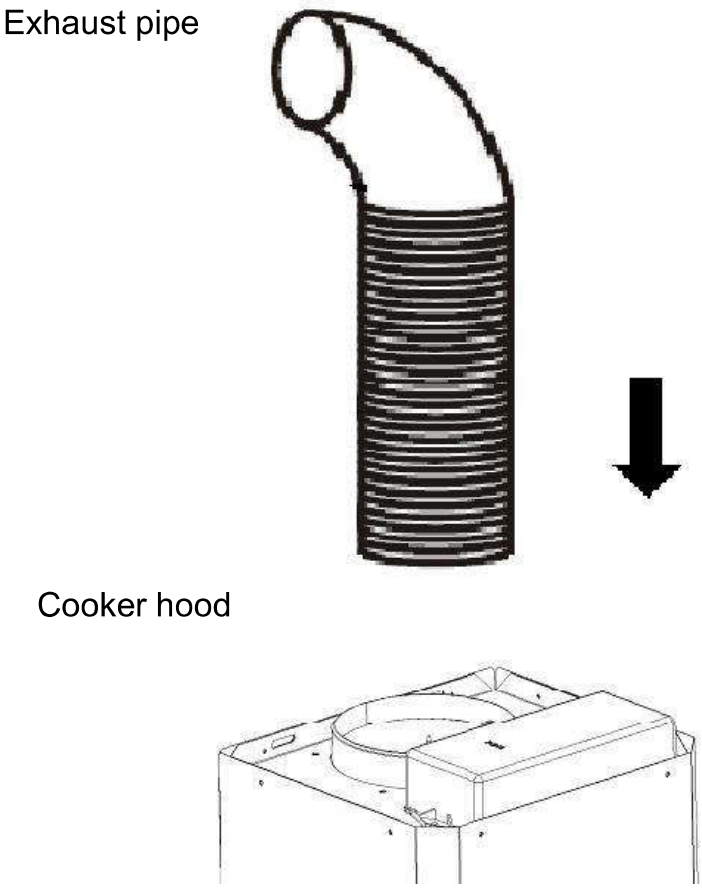

6.

i. Place the glass in appropriate position on the top the cooker hood.

ii. Fix with 4 screws and washer. In order to avoid the glass cracking, please do not tighten the screws too strongly.

i. By Put the inner chimney into outer chimney .Then pulling out the inner chimney upwards. Adjust to reach the height required.

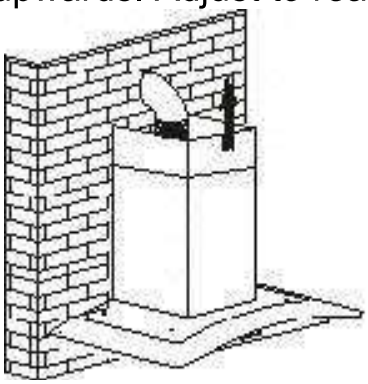

ii. Sliding the chimney to adjust the chimney height. When the height you required is reached, then hang the fixing hole to the fixing screws as showed in below pictures.

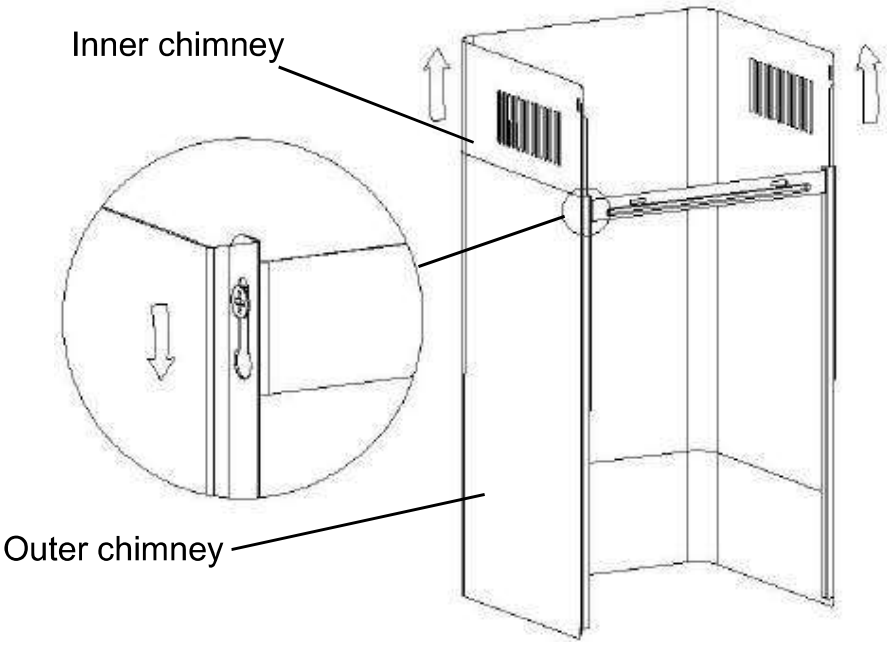

8.

i. Drill 2 x 8mm holes to accommodate the plate II. Screw and tighten the plate II onto the wall with 2 screws provided.

ii. Assembly the chimney onto the unit and fix it with 2 screws.

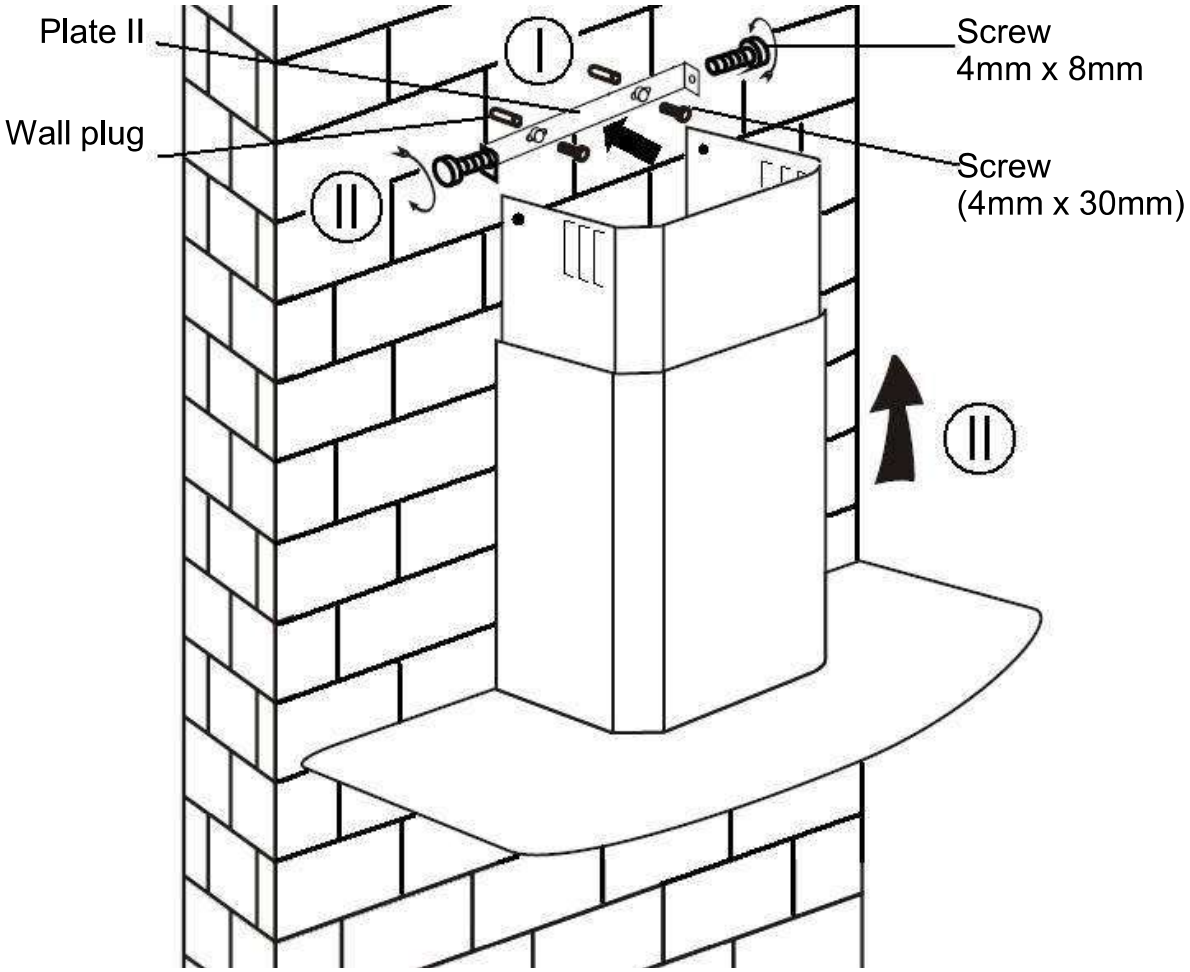

Standard Installation Accessories List

Spec.	Illustration Picture	Qty
Air Deflector	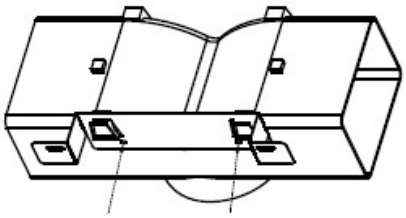	1
Bracket	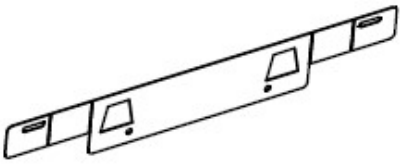	1
φ8 rawl plugs φ8×φ6 white color		2
Screws ST4.0×30		2
Screws ST3.5×12		2

INSTALLATION(AIR DEFLECTOR FOR T-SHAPE,CURVED GLASS,FLAT GLASS MODELS):

Air deflector is mentioned as included and not optional.

1.Before installation,curve both ends of the bracket as shown below:

2.Fix the bracket to the T-shaped plastic outlet with 2pcs ST3.5x12mm screws provided.

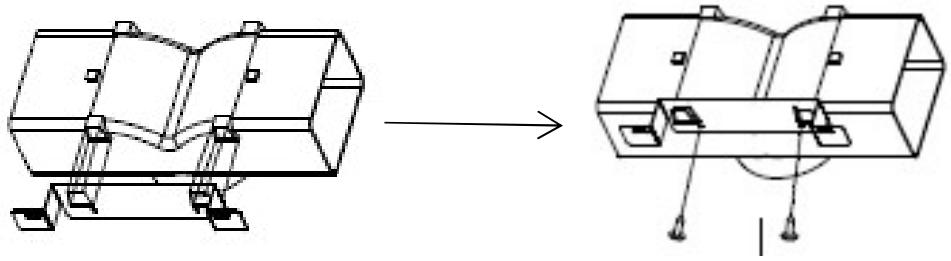

3.Drill 2 holes to accommodate the wall plugs,then screw and tighten the bracket onto the wall with 2pcs ST4x30mm screws provided.

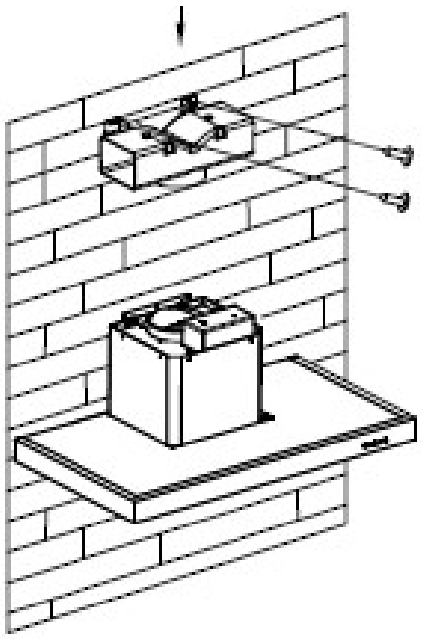

4.Attach the exhaust pipe onto the air outlet of the cooker hood as shown below:

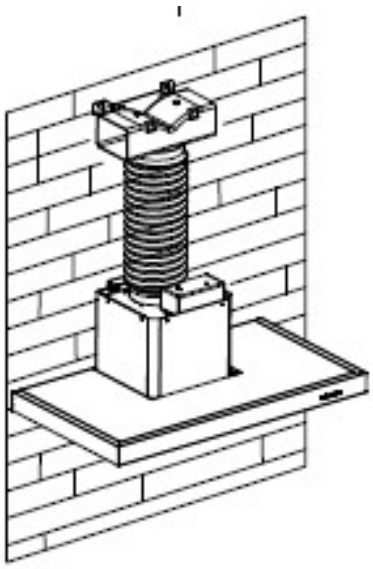

5.Install the chimney to the unit and fix it.

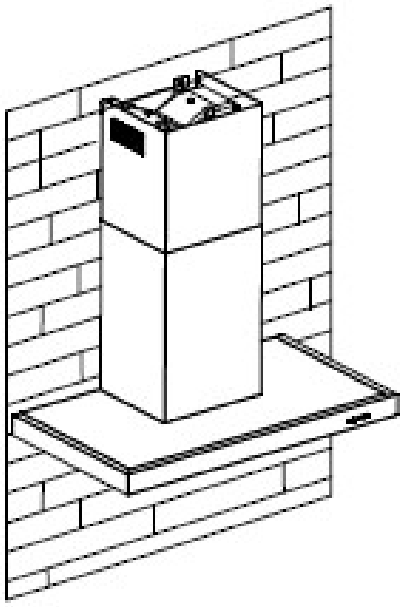

o “Please kindly be noted: T-shaped plastic outlet and v-flaps can not be use d at the same time. You can use them in two ways: 1) Add v-flap on existing o utlet; 2) Use T-shaped plastic outlet, no add v-flap.”

o “Note: The product is provided with v-flap accessory. This accessory is not mandatory for installation, operation and use of the product.”

Standard Installation Accessories List

Spec.	Illustration Picture	Qty
Air Deflector	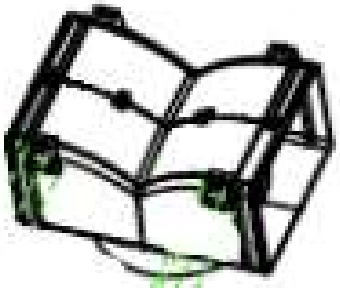	1
Bracket		1
φ8 rawl plugs φ8×φ6 white color	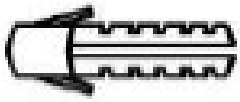	2
Screws ST4.0×30		2
Screws ST3.5×12		2

INSTALLATION（AIR DEFLECTOR FOR PYRAMID & SLANT MODELS):

Air deflector is mentioned as included and not optional.

1.Fix the bracket to the T-shaped plastic outlet with 2pcs ST3.5x12mm screws provided as shown below:

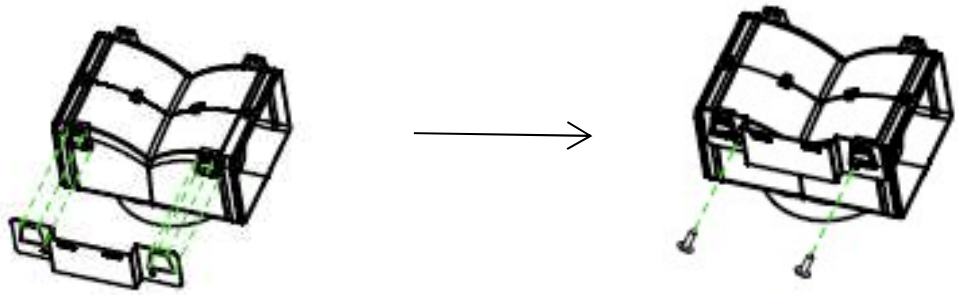

2. Drill 2 holes on the wall to accommodate the wall plugs,then screw and tighten the bracket onto the wall with 2pcs ST4x30mm screws provided.

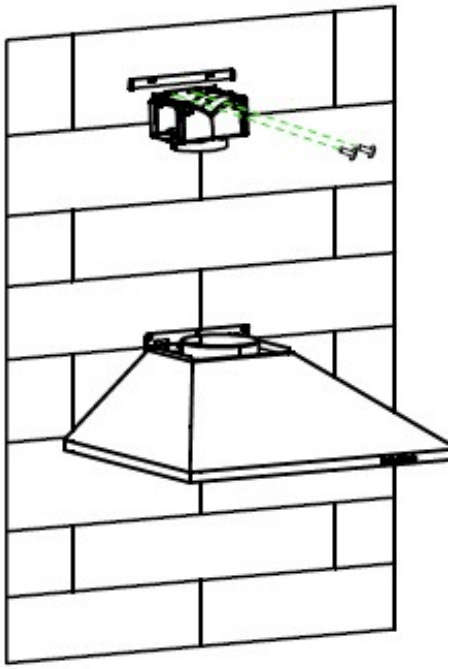

3. Attach the exhaust pipe onto the air outlet of the cooker hood as shown below:

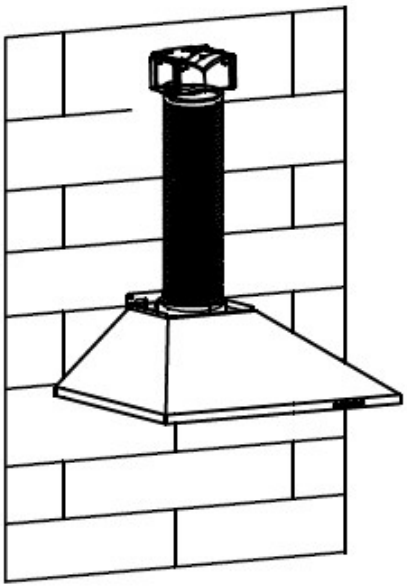

4.Install the chimney to the unit and fix it.

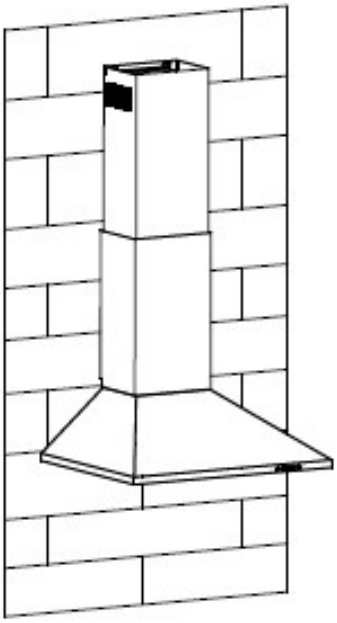

o “Please kindly be noted: T-shaped plastic outlet and v-flaps can not be use d at the same time. You can use them in two ways: 1) Add v-flap on existing o utlet; 2) Use T-shaped plastic outlet, no add v-flap.”

o “Note: The product is provided with v-flap accessory. This accessory is not mandatory for installation, operation and use of the product.”

INSTALLATION (VENT INSIDE)

If you do not have an outlet to the outside, exhaust pipe is not required and the installation is similar to the one show in section “INSTALLATION (VENT OUTSIDE)”.

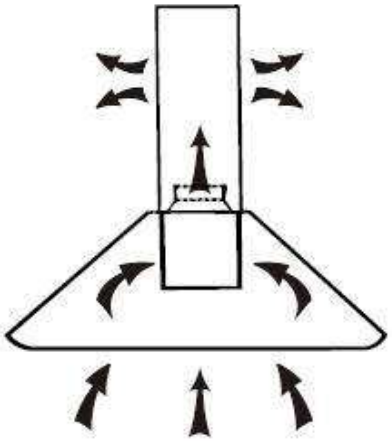

Activated carbon filter can be used to trap odors.
In order to install the activated carbon filter, the grease filter should be detached first. Press the lock and pull it downward.

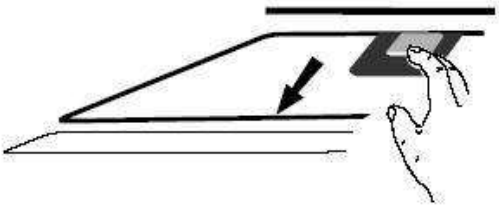

Plug the activated carbon filter into the unit and turn it in clockwise direction. Repeat the same on the other side.

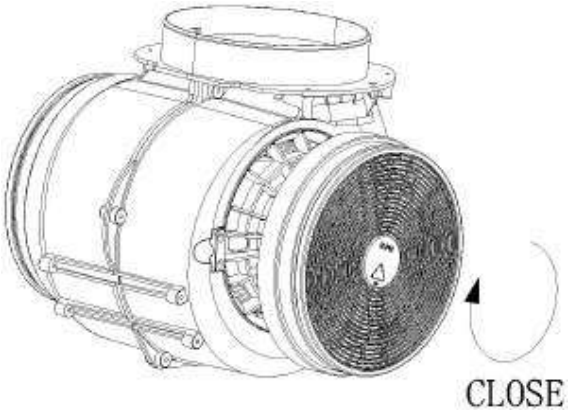

NOTE:

- *Make sure the filter is securely locked. Otherwise, it would loosen and cause dangerous.*
- *When activated carbon filter attached, the suction power will be lowere*

DESCRIPTION OF COMPONENTS

CONFIGURATION 1

1 2 3

OPERATION

Button 1

The button is with indicate backlit, when you press the button,the backlit will be turned on and the fan will be turned on at low speed. when press again, it will turn off the fan.
It's used for Ventilation on the kitchen. It is suitable for simmering and cooking which do not make much steam.

Button 2

The button is with indicate backlit, when you press the button,the backlit will be turned on and the fan will be turned on at Medium Speed. when press again, it will turn off the fan.
Airflow speed is ideally for ventilation in standard cooking operation.

Button 3

The button is with indicate backlit, when you press the button,the backlit will be turned on and the fan will be turned on at High Speed. when press again,. it will turn off the fan.
When high density of smoke or steam produced, press high-speed button for highest effective ventilation.

NOTE: If Low / Medium / High speed buttons are press at the same time, the unit will only operate at the highest speed.

Light button

CONFIGURATION 2

0 1 2 3

OPERATION

Off button 0
It's used for turning off the fan.

Low Speed button **1**
It's used for Ventilation on the kitchen. It is suitable for simmering and cooking which do not make much steam.

Medium Speed button **2**
Airflow speed is ideally for ventilation in standard cooking operation.

High Speed button **3**
When high density of smoke or steam produced, press high-speed button for highest effective ventilation.

NOTE: If Low / Medium / High speed buttons are press at the same time, the unit will only operate at the highest speed.

Light button

CONFIGURATION 3

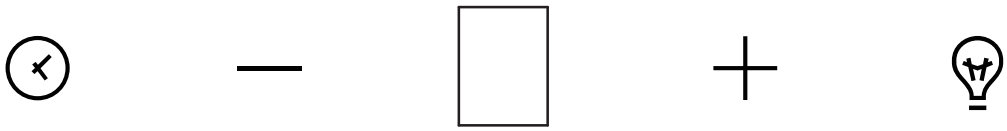

On/Off button
It’s used for turning on/off the fan.

Speed plus button
For increasing the speed of the fan

Speed decrease button
For decreasing the speed of the fan.

Light button

Digital display
Fan speed display:"1" for Low speed, "2" for Medium speed, "3" for High speed, “4” for Booster function.

Quick timer: Press + & — hold for 1 second, Digital display will flashing & into 5 minutes count down, after 5 minutes motor & light will turn off automatic & Buzzer sound for 1 second.

Booster function
This hood has a booster function. To activate the booster, Press + to speed 4, enter into highest speed while the hood is in use and it will increase speed for 5 minutes, before slowing down again.

CONFIGURATION 4

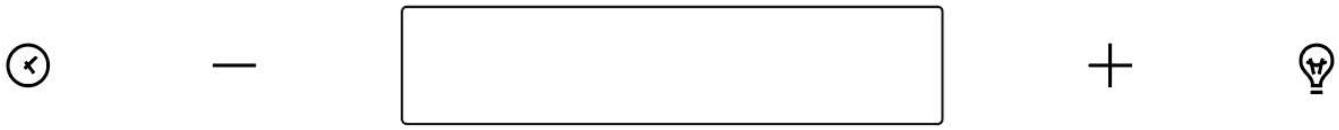

Timer button

1. Setting the time of the day
   When hood in standby mode (motor not working), press the timer button to enter the time setting.
   Press the '***Fan speed'*** key to set the hour of the day and press the '***Light*** 'key to set the minute.

2. Setting the Timer
   When the hood is in operation mode, press the timer button to set the countdown.
   Press the timer button one timer then the countdown will increase one minute. The max countdown is 60 minutes.

Speed decrease button

For decreasing the speed of the fan.

Speed plus button

For increasing the speed of the fan

LIGHT Button

For lighting ON & OFF.

LCD display

1. Motor symbol, will rotate when the motor is working;
2. Time display;
3. Timer symbol, will appear when timer is setting and counting;
4. Light symbol;
5. Motor speed;
6. Turbo speed symbol, will appear when the speed is highest setted;
7. Alarm symbol, will appear 5 seconds when the counting down of timer is over.
8. Cleanning alarm, appear when total working time up to 14 hours or at the first time using after pluging.

CONFIGURATION 5

1 2 3 B

STANDBY MODE.
After plug in, all lighting, system in **STANDBY MODE**.

1 **Low Speed button**
It's used for Ventilation on the kitchen. It is suitable for simmering and cooking which do not make much steam.

2 **Medium Speed button**
Airflow speed is ideally for ventilation in standard cooking operation.

3 **High Speed button**
When high density of smoke or steam produced, press high-speed button for high effective ventilation.

B **Booster function**
This hood has a booster function. To activate the booster, Press B to speed 4, enter into highest speed while the hood is in use and it will increase speed for 5 minutes, before slowing down again.

Light
For lighting ON & OFF.

MAINTENANCE

Before cleaning switch the unit off and pull out the plug.

I. Regular Cleaning
Use a soft cloth moistened with hand-warm mildly soapy water or household cleaning detergent. Never use metal pads, chemical, abrasive material or stiff brush to clean the unit.

II. Monthly Cleaning for Grease Filter
ESSENTIAL: Clean the filter every month can prevent any risk of fire.

The filter collects grease, smoke and dust…... so the filter is directly affecting the efficiency of the cooker hood. If not cleaned, the grease residue (potential flammable) will saturate on the filter. Clean it with household cleaning detergent.

III. Annual Cleaning for Activated Carbon Filter
Apply SOLELY to unit that installed as a recirculation unit (not vented to the outside). This filter traps odors and must be replaced at least once a year
depending on how frequent the cooker hood used.

IV. Changing a light bulb
Remove the screws on the glass, take off the hood glass. Find the bulb that requires replacement, you will find it located in the light fixture which is inside the exposed section of the canopy.

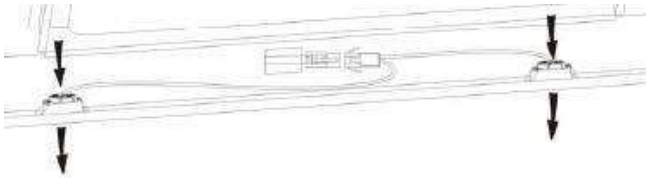

Disconnect the light wiring point and remove the bulb holders and wiring from the hood. Important: It's not possible to replace the bulbs individually, it will be necessary to obtain the bulbs, bulb holders and wiring as a complete part. (LED light: MAX 1.5W)

Fit the replacement bulbs, bulb holders and wiring in the same manners as the originals. Then reconnect the light wiring point.

Refit the hood glass and fasten the glass screws. Make sure the screws are fully tightened.

TROBULESHOOTING

Fault	Cause	Solution
Light on, but fan does not work	The fan blade is jammed.	Switch off the unit and repair by qualified service personnel only.
	The motor is damaged.	
Both light and fan do not work	Halogen light bulb burn.	Replace the bulb with correct rating.
	Power cord looses.	Plug in to the power supply again.
Serious Vibration of the unit	The fan blade is damaged.	Switch of the unit and repair by qualified service personnel only.
	The fan motor is not fixed tightly.	Switch off the unit and repair by qualified service personnel only.
	The unit is not hung properly on the bracket.	Take down the unit and check whether the bracket is in proper location.
Suction performance not good	Too long distance between the unit and the cooking plane	Readjust the distance to 65-75cm

CUSTOMER ASSISTANCE SERVICE

If you cannot identify the cause of the operating anomaly, switch off the appliance and contact the Assistance Service.

PRODUCT SERIAL NUMBER. Where can I find it?
It is important you to inform the Assistance Service of your product code and its serial number (a 16 character code which begins with the number 3); this can be found on the guarantee certificate or on the data plate located on the appliance.
It will help to avoid wasted journeys to technicians, thereby (and most significantly) saving the corresponding callout charges.

ENVIRONMENTAL PROTECTION

Waste electrical products should not be disposed of with household waste. Please recycle where facilities exist. Check with your Local Authority or retailer for recycling advice.

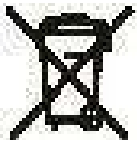

This appliance is marked according to the European directive 2012/19/EU on Waste Electrical and Electronic Equipment (WEEE).
By ensuring this product is disposed of correctly, you will help prevent potential negative consequences for the environment and human health, which could otherwise be caused by inappropriate waste handling of this product.
The symbol on the product indicates that this product may not be treated as household waste. Instead it shall be handed over to the applicable collection point for the recycling of electrical and electronic equipment Disposal must be carried out in accordance with local environmental regulations for waste disposal.
For more detailed information about treatment, recovery and recycling of this product, please contact your local city office, your household waste disposal service or the shop where you purchased the product.