Hisense

USER MANUAL

Read the manual carefully and ensure you have fully understood its contents before operating this device for the first time.

ES-A22100T-1 C

English

Figures and illustrations in this manual are provided for reference only and may differ from actual product appearance.

Parts of the software function changes with the system upgrade.

Contents

Installing the Stand or Wall mount bracket 1
TV Front and Rear 3
Connection 5
Remote Control 7
Specifications 10
Other Information.....12

Accessories List

The following accessories are included with TV:

User Manual × 1	Screw × 4	Base Stand × 2
AA or AAA Battery × 2	Remote Control × 1	Power Cord × 1
Warranty Card × 1	RCA jack to AV Cable × 1(55"/65"/70")	

NOTE

- The accessories may be different from the list above due to different models, countries / regions. Please refer to the actual accessory bag.

Important Notice

Paragraphs beginning with the symbol ⚠ indicate important instructions, tips or conditions for the following settings.

⚠ **For your own safety and the optimal performance of your TV, ensure to read the safety instructions before performing any installation.**

Compatibility with 3rd party products, software and services are not guaranteed. We cannot be held liable for any damage or loss suffered whilst operating, using or connecting to incompatible devices or apps.

The recording and playback of content on this or any other device may require permission from the owner of the copyright or other such rights in that content. It is your responsibility to ensure that your use of this or any other device complies with applicable copyright legislation in your country. Please refer to that legislation for more information on the relevant laws and regulations involved or contact the owner of the rights of the content you wish to record or playback.

Read these instructions
Follow all instructions
Heed all warnings
Keep these instructions
All rights reserved.

CE UK CA

Safety Instructions

To ensure safe and correct use of this product, always comply with the following precautions to avoid dangerous situations and damage to your unit:

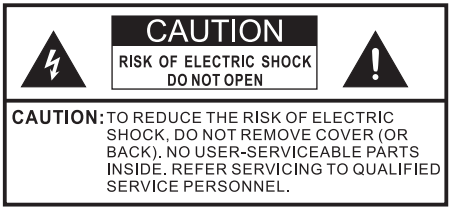

The lightning flash with arrowhead symbol, within an equilateral triangle is intended to alert the user to the presence of uninsulated dangerous voltage within the product's enclosure that may be of sufficient magnitude to constitute a risk of electric shock.

The exclamation point within an equilateral triangle is intended to alert the user to the presence of important operating and maintenance (servicing) instructions in the literature accompanying the appliance.

AC voltage: This symbol indicates that the rated voltage marked with the symbol is AC voltage.

Class II product : This symbol indicates that it does not require a safety connection of protective earthing (ground).

The intended use and ambient conditions for this TV

This TV is intended for the rendering of video and audio signals, on a table-top or wall-mounted, in a home or office environment. It must not be used in rooms with a high level of humidity or dust concentration. The warranty is only valid if used as intended by the manufacturer.

WARNING

High humidity and dust concentration may lead to current leaks in the device. To reduce the risk of fire or electrical shock:

- **Do not expose this unit to rain, moisture, dripping or splashing water, and do not place objects filled with liquids, such as vases, cups, etc. on or over the unit.**
- **Do not touch the TV with wet hands.**
- **Do not expose to direct air-conditioning and keep candles or other naked flames away from the TV at all times.**

If the TV is moved from a cold environment to a hot environment, leave it switched off for at least an hour to avoid condensation. If used outside, make sure it is protected from moisture.

If you notice anything unusual, immediately remove the power plug.

In case of fire, use preferably a CO_2 gas or powder fire extinguisher. If such extinguishers are not accessible, try to isolate the electrical supply before using a water fire extinguisher.

WARNING

Stability Hazard

A television set may fall, causing serious personal injury or death. Many injuries, particularly to children, can be avoided by taking simple precautions such as:

- ALWAYS use cabinets or stands or mounting methods recommended by the manufacturer of the television set.
- ALWAYS use furniture that can safely support the television set.
- ALWAYS ensure the television set is not overhanging the edge of the supporting furniture.
- ALWAYS educate children about the dangers of climbing on furniture to reach the television set or its controls.
- ALWAYS route cords and cables connected to your television so they cannot be tripped over pulled or grabbed.
- NEVER place a television set in an unstable location.
- NEVER place the television set on tall furniture (for example, cupboards or bookcases) without anchoring both the furniture and television set to a suitable support.
- NEVER place the television set on cloth or other materials that may be located between the television set and supporting furniture.
- NEVER place items that might tempt children to climb, such as toys and remote controls, on the top of the television or furniture on which the television is placed.

If your existing television set is being retained and relocated, the same considerations as above should be applied.

■ Moving/Transportation

Before moving this TV, disconnect all cables and move in the vertical position only. Grasp the device on the upper and lower edges of the frame.

- Do not press or put stress on the front panel of the TV. It may take two or more people to carry larger TVs.

If you have to briefly lay down the TV, place the unit with its entire front surface lying flat on soft material.

The LED screen is made of glass and can break if is not handled properly. Always wear rubber gloves to carry the unit. If the LED screen is damaged, liquid crystal might leak out. In case of skin contact, immediately rinse thoroughly with water.

■ Power Supply

Incorrect voltages can damage the TV. Only connect this unit to a power supply with the correct voltage and frequency noted on the type plate, using the supplied power cable.

The power plug must be easily accessible so that the device can be disconnected at all time. The unit is live, even if in standby mode, as long as the unit is connected to a power outlet.

It is recommended that this unit is placed on a dedicated circuit.

- Do not overload the power outlets by connect too many appliances to the same outlet. Overloaded wall outlets, extension cords, etc. are dangerous and can result in electric shock and fire.

After power off, don't turn it on again in 5 seconds. Frequent switching power supply in a short period of time can cause abnormal TV.

■ Power plug and power cable

- Do not touch the power plug with wet hands.
- Do not place heavy objects on the power cable. Route the cable so that it is not kinked or laid over sharp edges, walked on or exposed to chemicals. A power cable with damaged insulation can cause electric shock and fire.
- Pull the power plug, NOT on the cable when disconnecting. The cable can become damaged and cause a short circuit if pulled on.
- Do not place the power cable near a high temperature object.
- Do not move the TV with the power cable plugged into a socket.
- Do not use a damaged or loose power cable, or a damaged socket outlet.
- Do not use any power cords other than the one supplied with this unit.
- MAIN plug on the power cord is used as the disconnect device, the disconnect device and socket-outlet shall be easily accessible.

■ Set-up

Check that the location is suitable to bear the load of the TV. Place on a level, sturdy and horizontal base. Ensure that the unit does not hang over the edge of the base when placed in or on furniture. If placed on a cart, use caution when moving to avoid the unit from tipping over.

- Place the unit in a normal upright horizontal position. It must never be operated vertically, lying flat or hanging overhead from the ceiling.
- Place the unit where it is not exposed to direct sunlight or other sources of heat.

When mounting the TV on a wall, follow the instructions supplied with the wall-mount, make sure not to install the TV by

hanging the power and signal cables on the back of the TV.

■ Air ventilation and high temperatures

Install your TV only where there is proper ventilation, and ensure that there is at least 10 cm free space on the sides and 20 cm above the unit for air circulation. Excessive heat and obstruction of ventilation could lead to fire or early failure of some electric components.

- Do not block any ventilation openings with newspapers, tablecloths, curtains, etc.
- Do not dry clothing etc. on top of the unit.
- Take care not to touch the ventilation openings since they may become hot.
- Do not insert foreign objects into the TV through the vents.

■ The Stand

- Do not use any stand other than the one supplied with this unit.
- Do not modify or use the stand if it becomes warped of physically damaged.
- During setup, make sure that all the screws are securely tightened.
- Ensure that the TV does not suffer any impact during the attachment of the stand.
- Ensure that children do not climb onto the stand.
- Attach or remove the stand with at least two people.

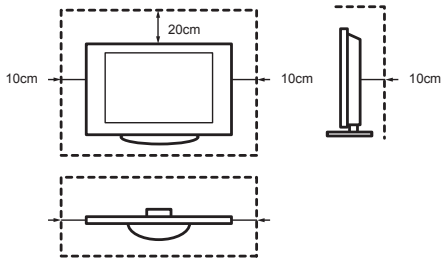

Prevent small items from getting into the interior of the device through the ventilation slots. Such objects may cause short circuits, which may cause fire.

If something should get inside the unit, immediately unplug the power plug of the device and contact service support.

■ The LED screen

Despite thorough care when manufacturing this display, it cannot be 100% guaranteed that no sub-pixel defects will occur due to technical reasons. These cannot be considered as a device defect in terms of the guarantee. They will not affect the performance and reliability of the TV.

To prevent “image burn”, avoid displaying still images for long periods of time, there is a possibility that a copy of the image may remain. If the aspect ratio is set to 4:3 for a long period of time, image burn may occur on the black areas. Image burn is not covered by the warranty.

- Do not apply strong force or impact on the display panel.

Avoid touching the LED screen or touching it for long periods of time. Doing so may produce some temporary distortion effects on the screen.

■ Radio waves

- Do not use the TV in any medical institutions or locations with medical equipment. Radio waves may interfere with medical equipment and cause malfunction.
- Do not use the TV near any automatic control equipment such as automatic doors or fire alarms. Radio waves may interfere with automatic control equipment and cause malfunction.

If you have a cardiac pacemaker, keep a distance of at least 22 cm from the TV. Radio waves may interfere with the operation of a pacemaker.

■ Built-in wireless LAN

- Do not connect to wireless networks that you do not have the usage rights for. Data transmitted and received over radio waves may be intercepted and monitored.

The built-in wireless LAN uses 2.4 GHz and 5 GHz frequency band. To avoid malfunctions or slow response caused by radio wave interference, keep the TV away from devices such as other wireless LAN devices, microwaves, mobile phones, and other devices that use 2.4 GHz and 5 GHz signal.

■ Warning about off-gassing

New furniture, carpet, paint, building materials and electronics can release chemicals into the air through evaporation. After you set your TV up and turn it on for the first time, you may notice a slight smell within a couple of hours. This is because some components of TV are heating up for the first time. The materials that we use fully meet the environmental requirements and regulations. Your TV is working just fine and the fumes from the off-gassing will diminish eventually.

■ Supervision

- Do not let children play unsupervised close to the TV. It could tip over, be pushed off or pulled down from the stand surface and injure someone.
- Do not allow a switched-on TV to run unattended.

■ Volume

Loud music and noises can lead to irreversible damage to your ears. Avoid extreme volume, especially over long periods and when using headphones.

If you hear a drumming noise in your ears, turn down the volume or temporarily stop using headphones.

■ Thunder Storms

Pull out the power plug and all connected antenna cables from the TV during a thunderstorm. Overvoltage caused by lightning strikes can damage the TV via the antenna system, as well as the wall socket.

■ Long periods of absence

As long as the power plug is connected to a live socket outlet, the TV will consume power even in standby mode. The power plug and all connected antenna cables should be disconnected out during long periods of absence.

■ Cleaning and care

CAUTION:

Unplug the power cord prior to cleaning the TV.

Clean the TV, the screen, and the remote control with a soft, moist, clean and colour-natural cloth only. Do not use any chemicals.

- Do not subject the surfaces to insect repellent, solvent, thinner or other volatile substances. This may degrade the surface quality.
- Do not spray water or other liquids directly on the TV. Liquid inside the TV could lead to product failure.
- The surface of the display panel is treated and may be easily damaged. Take care not to scratch it with fingernails or other hard objects.
- Also wipe the power plug with a dry cloth at regular intervals.

■ Service/Repair

Never remove the cover/back of the TV; there are no user serviceable parts inside. Refer all service to qualified service personnel.

■ Packaging

Keep the anti-moisture materials and plastic bags out of reach of children.

Plastic bags can cause suffocation and the anti-moisture material is harmful if swallowed. If swallowed by mistake, force the patient to vomit and visit the nearest hospital.

■ Modification

Do not attempt to modify this product in any way. Unauthorised modification could void the warranty of this unit, cause electric shock and fires.

■ Remote Control batteries

- Incorrect installation may cause battery leakage, corrosion and explosion.
- Replace only with the same or equivalent type.
- Do not mix old and new batteries.
- Do not mix different battery types.
- Do no use rechargeable batteries.
- Do not burn or break up batteries.
- Be sure to dispose of batteries correctly.
- Do not expose batteries to excessive heat such as sunshine, fire or the like.

■ Outdoor Antenna Grounding

If an outdoor antenna used, be sure the antenna system is protected against voltage surges and built-up static charges.

■ Disposal

Refer to the recycling section of this manual.

Installing the Stand or Wall mount bracket

CAUTION

- Be sure to disconnect the AC power cord before installing a stand or wall mount brackets.
- The display on your TV is fragile. Make sure the TV screen is not scratched or damaged by hard objects or from pressure.
- After the installation is completed, make sure the TV is steady on a table or firmly attached to a wall mount, before removing all protective film, if any.

Installing the stand

Follow the illustrations and textual instructions below to complete the installation steps:

1. Carefully place your TV face-down on a soft, flat surface to prevent damage to the TV or scratching to the screen.
2. Take out the 2 stands from the accessory bag and then insert the stands into the bottom slots of the TV.
3. Secure the stands to the TV with the 4 screws in accessory tightly.

43"

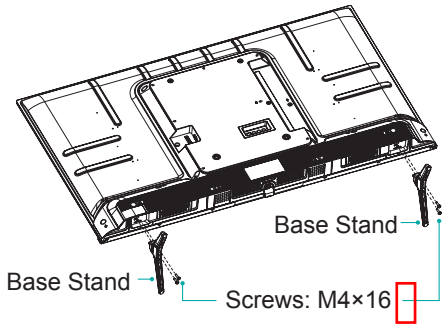

50"/55"

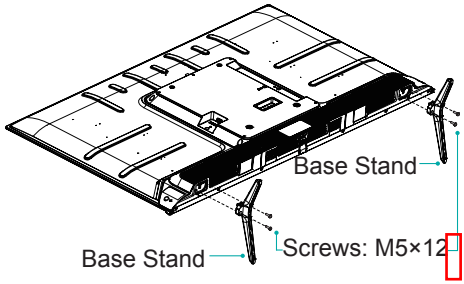

70"

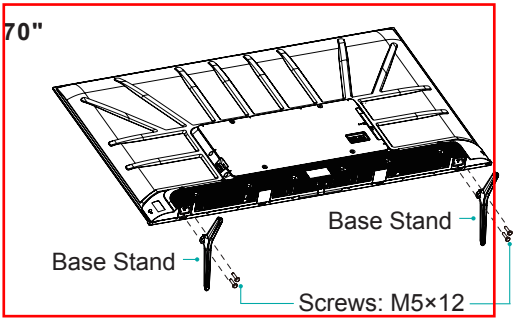

65"

Note: If your table is long enough to place the TV on top of, then insert the base stands into the screw holes 'A' that are shown in the illustration. If your table is NOT long enough, then insert the base stand into the screw holes 'B' that are shown in the illustration. Note that these two installation methods types cannot be mixed.

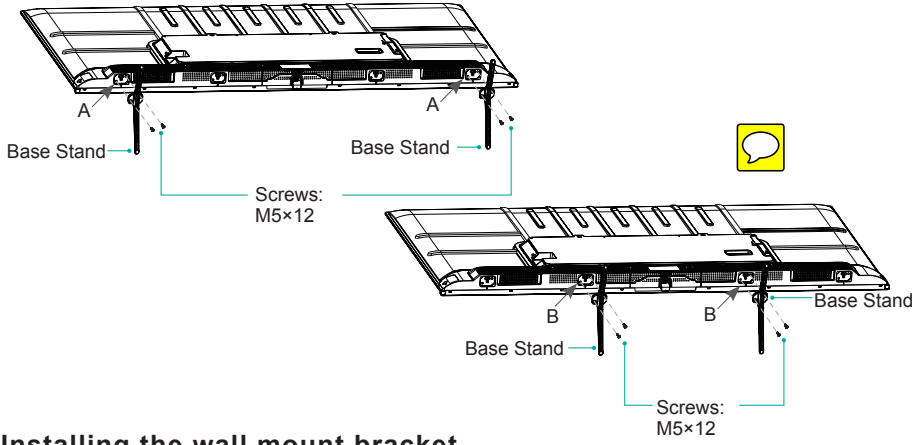

Installing the wall mount bracket

Before mounting the TV, remove the TV stand if you have already attached it, and make sure the wall mount bracket supports the weight of your TV.

CAUTION

When mounting the TV on a wall, follow instructions provided with the wall mount bracket. If it is not correctly mounted, the TV may fall and cause property damage or personal injury.

- Place spacers between the TV and bracket.
- Standard dimensions are shown below.

Wall mount hole pattern (mm)	200 × 300 (43"/50"/55") 400 × 300 (65"/70")
Wall mount screw size	M6

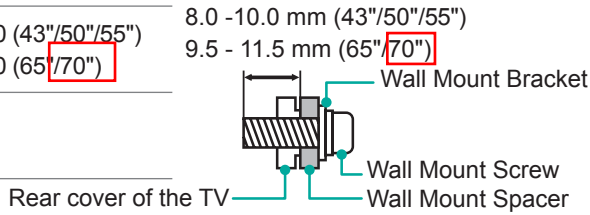

- We do not recommend hanging the TV on a slanted wall, and when wall mounting make sure your television remains parallel to the wall and does not lean forward.

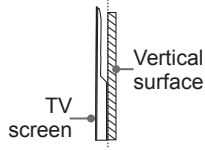

NOTES

- The diameter and length of the screws differ depending on the wall mount bracket model.
- Wall mount bracket is optional. Your TV may not have wall mount bracket. Please refer to the actual accessories.

TV Front and Rear

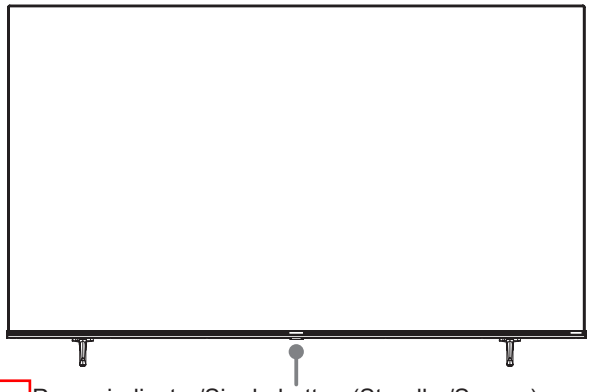

Power indicator/Single button (Standby/Source)

Item	*Description*
Power indicator	The light is red in standby mode.
 **Standby / Source**	Press the single button when in standby mode, and the TV will be turned on. Press the single button to call up the menu. When the focus is on "Power Off", wait for 3 seconds, and then the TV will go into standby mode automatically. Press the single button to call up the menu, and then select among the different input signal sources.

NOTES

- For 43", ANT2 Jack supports power supply for satellite antenna (13/18V, 420mA max.)
- For 50"/55"/65"/70", ANT2 Jack supports power supply for satellite antenna (13/18V, 0.5A max.)
- Check the jacks for position and type before making any connections. Loose connections can result in image or colour problems. Make sure that all connections are tight and secure.
- Not all A/V devices have the ability to connect to a TV, please refer to the user's manual of your A/V device for compatibility and connections procedure.
- Before connecting external equipment, remove the mains plug from the wall socket. Otherwise, it may cause electric shock.
- Powering on the TV requires several seconds to load programmes. Do not rapidly turn the TV off as it may cause the TV work abnormally.
- The Picture is Only for Reference.
- Service jack is not available for you to connect an external device. It can only be used by our factory for testing purposes.

43"/50"/55"
65"/70"
AC INPUT
43"/50"
AV IN
SERVICE
R
L
VIDEO
65"
AC INPUT
LAN
DIGITAL AUDIO OUT
S
70"
AC INPUT
43"
50"
55"
COMMON INTERFACE
CARD FACE FRONT
AV IN
SERVICE
HDMI 1(4K@60Hz)
HDMI 2(eARC) 4K@60Hz
HDMI 3 4K@60Hz
ANT 1 DVB-T/T2/C
ANT 2 DVB-S/S2 13/18V 0.5A
USB 1 DC 5V 1A(MAX)
USB 2 DC 5V 0.5A(MAX)
USB 2 DC 5V 1A(MAX)
HDMI 1 4K@60Hz
ANT 2 DVB-S/S2 13/18V 420mA
ANT 1 DVB-T/T2/C
HDMI 2 4K@60Hz
HDMI 3 4K@60Hz
COMMON INTERFACE (CARD FACE FRONT)
HEADPHONE
HDMI 1(ARC) 4K@60Hz
USB×2 DC 5V 0.5A(MAX)×2
LAN
DIGITAL AUDIO OUT
ANT 2 DVB-S/S2 13/18V 0.5A
ANT 1 DVB-T/T2/C
HDMI 2 4K@60Hz
HDMI 3 4K@60Hz
SERVICE
HDMI 1 4K@60Hz
HDMI 2 (eARC) 4K@60Hz
HDMI 3 4K@60Hz
USB 2 DC 5V 1A(MAX)

Connection

Terminals

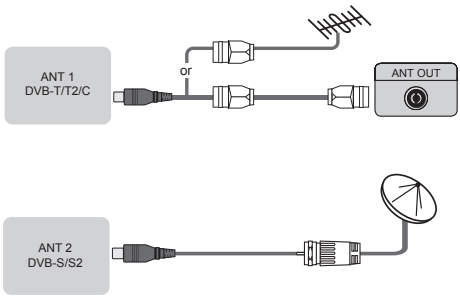

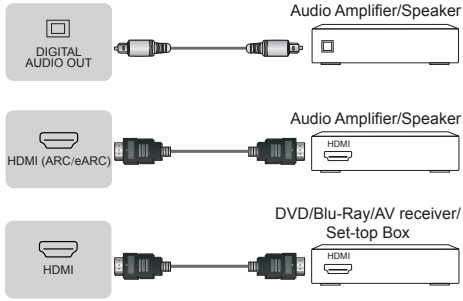



NOTE

- Excessive sound pressure from earphones and headphones can cause hearing loss.

43"/50"

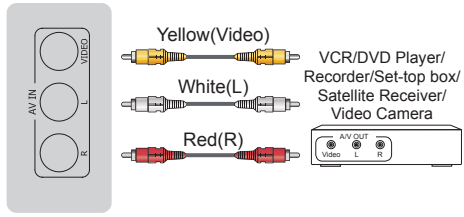

55"/65"/70"

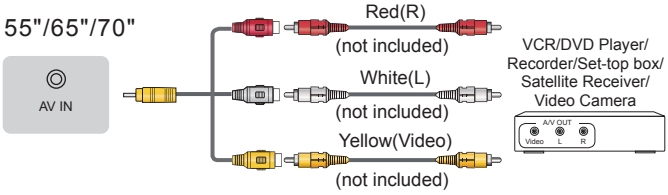

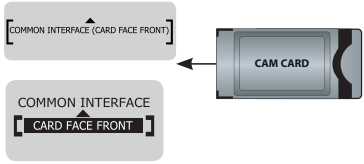

NOTE

- Do not repeatedly insert or remove the Common Access Module as this may damage the interface and cause a malfunction.
- You must obtain a CI+ module and card from the service provider of the channels you want to watch.
- CI+ is not supported in some countries and regions.

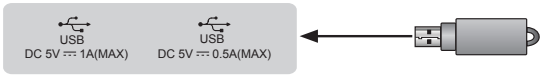

NOTE

- Exceeding a total current consumption may result in damage. The USB 1.1 and USB 2.0 devices maximum current consumption are 500mA. The USB 3.0 device maximum current consumption is 1A (only for some models).
- For individual non-standard high-capacity mobile hard disk, if its impulse current is greater than or equal 1A, it may cause TV-rebooting or self-locking. So the TV does not support it.

LAN (Wired setup)

Connect your TV to your network by connecting the LAN port on the back of your TV to an external modem or router using a LAN (Ethernet/Cat 5) cable. See the illustration below.

- It is recommended to use a modem or router that supports Dynamic Host Configuration Protocol (DHCP). Modems and routers that support DHCP automatically provide the IP address, subnet mask, gateway, and DNS, so you don't have to enter them manually. Most home networks already have DHCP.

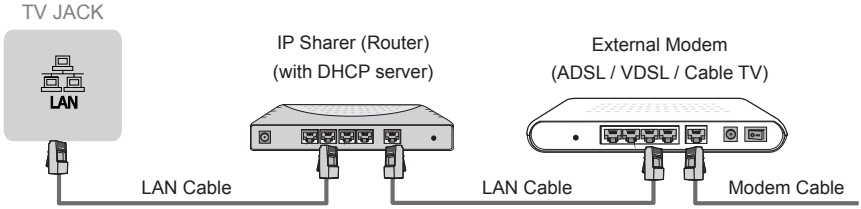

Wireless setup

To connect your TV to your network wirelessly, you need a wireless router or modem. See the illustration below.

- The built-in Wireless LAN Adapter supports the IEEE 802.11a/b/g/n/ac communication protocols. It is recommended to use IEEE 802.11ac router. Low transfer rates for b/g may have the influence on the quality of streamed videos and other media.

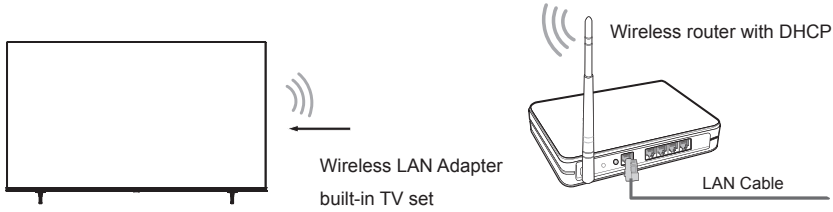

NOTES

- You must use the built-in Wireless LAN Adapter to use a wireless network because the set doesn't support external USB network adapters.
- If the wireless router supports DHCP, your TV can connect more easily to the wireless network.
- If you apply a security system other than the systems listed below, it will not work with the TV.

  Security system: WPA, WEP, WPA2.
- In order to guarantee smooth network, the distance between router and TV should be less than 10 metres.

Remote Control

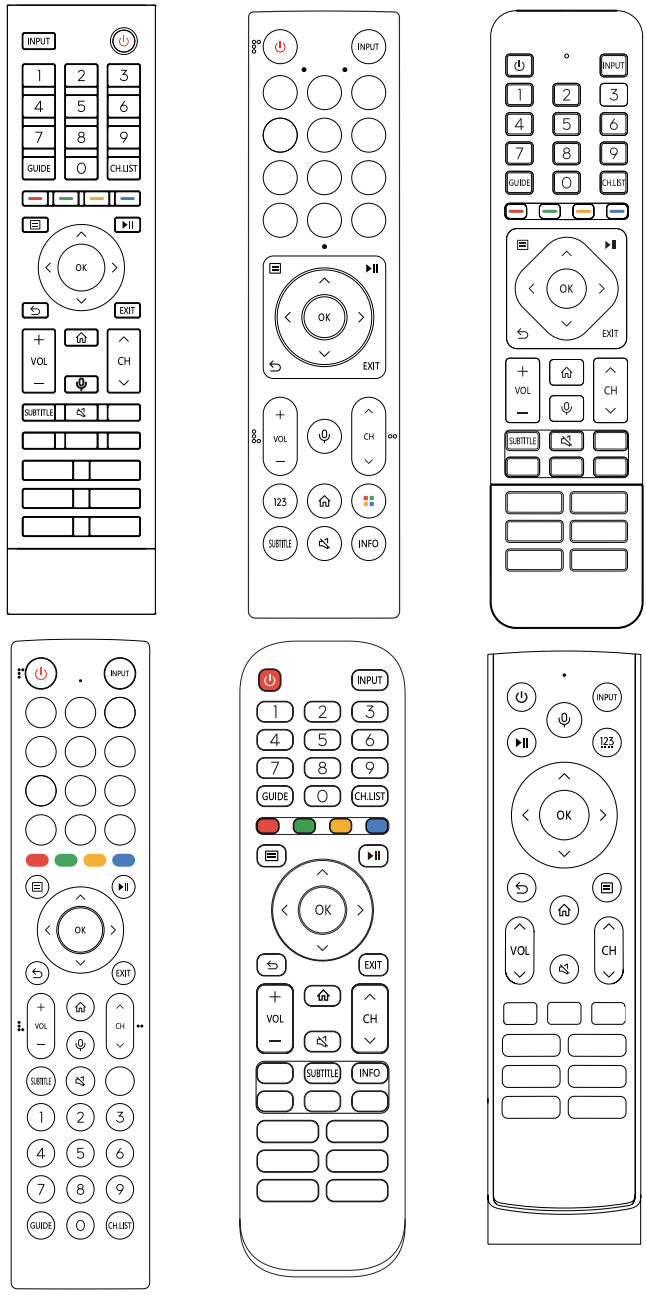

NOTE: The included remote control will vary depending on model, countries/regions. Check information according to the actual remote control in the accessory bag.

Buttons of remote control

BUTTON	*DESCRIPTION*
⏻	Power on/ Standby
INPUT	Select input sources
Number button / 123	Select a channel or input numbers
Four colour buttons /	Special function buttons
GUIDE	Display the Electronic Program Guide (DTV mode)
CH.LIST	Display the Channel List on the screen
⏯	Playpad keys
☰	Press to enter Menu
∧ / ∨ / < / >	D-pad (up/down/left/right navigation buttons)
OK	Confirmation button
⮌	Under the Menu or App, return to the previous place
⌂	Display the Home screen
VOL	Volume (up/down)
CH	Channel (up/down)
🔇	Mute and restore sound
EXIT	Exit the menu or exit the application
🎤	Activate the microphone
INFO	Display the current program information
SUBTITLE	Activate or deactivate the subtitle mode
MEDIA	Enter the MEDIA
⋮⋮⋮ / ⊞	Fast access to all applications
APP	Quick access buttons to APP
TEXT/TXT	Turn on/off the teletext function
BROWSER	Enter into BROWSER
🖉	Custom button to launch input or apps quickly
123	Enter Channels / input numbers and special function buttons(Red/Green/Yellow/Blue)

Installing Batteries in the Remote Control

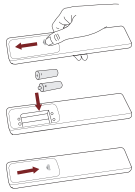

1. Slide the back cover to open the battery compartment of the remote control.
2. Insert two AA or AAA size batteries. Make sure to match the (+) and (-) ends of the batteries with the (+) and (-) ends indicated in the battery compartment.
3. Close the battery compartment with the cover.

NOTE

- Product image is only for reference, actual product may vary in appearance.
- Dispose of your batteries in a designated disposal area.
- Do not mix battery types or combine used batteries with new ones.
- Remove depleted batteries immediately to prevent battery acid from leaking into the battery compartment.
- If you do not intend to use the remote control for a long time, remove the batteries.
- Leaving a battery in an extremely high temperature surrounding environment that can result in an explosion or the leakage of flammable liquid or gas.
- Battery chemicals can cause a rash. If the batteries leak, clean the battery compartment with a cloth. If chemicals touch your skin, wash immediately.
- Risk of fire or explosion if the battery is replaced by an incorrect type.
- Disposal of a battery into fire or a hot oven, or mechanically crushing or cutting of a battery, that can result in an explosion.
- A battery subjected to extremely low air pressure that may result in an explosion or the leakage of flammable liquid or gas.

Pairing the Remote Control (only for Bluetooth remote control)

Pair the remote to the TV after you power it on. Keep the remote control within 3 metres from the TV. Press any button (except power and mic button) to pair.

NOTE

- In special cases, press and hold [☰] button to pair.
- If an unknown error occurred with the remote, then it could have been caused by interference. Try to remove what's causing the interference and pair it again.
- If an unknown error occurred in the remote control while the battery power is normal, you can take out the batteries, press any key for 1~2 seconds, and insert them back. Then the remote control will work normally.
- The remote cannot be paired to the TV while the TV is in standby mode.

Remote Control Operation Range

1. The remote control can work at a distance of up to 8 meters in front of the TV set.
2. The remote control angle: taking the remote sensor as an apex, 6 meters away, its controlled horizontal angle is within ±30°, while the vertical angle is within ±15°.
3. The operating distance may vary depending on the brightness of the room.

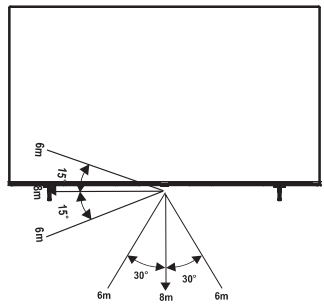

Disposal of this unit

Product should not be damaged, dismantled or thrown in municipal waste.
It should be packed and handed over to authorised re-cycler.

Specifications

☑Features, appearance and specifications are subject to change without notice.

Item		***43"***	***50"***
Dimension (W × H × D)	**Without Stand**	37.9 × 22.0 × 2.9 inches 963 × 560 × 74 mm	44.0 × 25.4 × 2.9 inches 1117 × 646 × 74 mm
	With Stand	37.9 × 24.1 × 8.8 inches 963 × 611 × 223 mm	44.0 × 27.7 × 10.8 inches 1117 × 703 × 274 mm
Weight	**Without Stand**	16.3 lbs (7.4 kg)	21.6 lbs (9.8 kg)
	With Stand	17.2 lbs (7.8 kg)	22.0 lbs (10.0 kg)
Active Screen Size (Diagonal)		108 cm	126 cm
Screen resolution		3840 × 2160	3840 × 2160
Audio power		7W + 7W	8W + 8W
Operating mode power density		0.020 Watts/cm²	0.018 Watts/cm²
Power consumption when turned off		N.A.	N.A.
Power consumption in standby mode		0.5 W	0.5 W
Item		***55"***	***65"***
Dimension (W × H × D)	**Without Stand**	48.5 × 28.0 × 2.9 inches (1232 × 711 × 74 mm)	57.2 × 32.8 × 2.9 inches (1452 × 834 × 74 mm)
	With Stand	48.5 × 30.2 × 10.8 inches (1232 × 768 × 274 mm)	57.2 × 35.3 × 11.8 inches (1452 × 896 × 300 mm)
Weight	**Without Stand**	24.9 lbs (11.3 kg)	36.4 lbs (16.5 kg)
	With Stand	25.4 lbs (11.5 kg)	36.8 lbs (16.7kg)
Active Screen Size (Diagonal)		139 cm	164 cm
Screen resolution		3840 × 2160	3840 × 2160
Audio power		8W + 8W	10W + 10W
Operating mode power density		0.016 Watts/cm²	0.017 Watts/cm²
Power consumption when turned off		N.A.	N.A.
Power consumption in standby mode		0.5 W	0.5 W
Item		***70"***	
Dimension (W × H × D)	**Without Stand**	61.4 × 35.6 × 3.3 inches 1560 × 904 × 84 mm	
	With Stand	61.4×38.7×14.6 inches 1560 × 984 × 370 mm	

Weight	**Without Stand**	47.8 lbs (21.7 kg)
	With Stand	48.9 lbs (22.2 kg)
Active Screen Size (Diagonal)		177 cm
Screen resolution		3840 × 2160
Audio power		15W + 15W
Operating mode power density		0.015 Watts/cm²
Power consumption when turned off		N.A.
Power consumption in standby mode		0.5 W
Power consumption		Please refer to the rating label.
Power supply		Please refer to the rating label.
Receiving systems	**Analog**	PAL-D/K, B/G, I, SECAM-D/K, B/G
	Digital	DVB-T/T2, DVB-C, DVB-S/S2
Wireless LAN Module specifications	**Frequency Range**	2.4-2.4835GHz 5.15-5.85GHz
	Output Power (Max.)	2.4-2.4835GHz 17dBm 5.15-5.25GHz 14dBm 5.25-5.35GHz(DFS Band) 14dBm 5.49-5.71GHz(DFS/TPC Band) 14dBm 5.725-5.85GHz(for Non EU) 14dBm
Bluetooth Module specifications	**Frequency Range**	2.4-2.4835GHz
	Output Power (Max.)	2.4-2.4835GHz, Class1, 6dBm
Environmental conditions		Temperature: 41°F - 95°F (5°C - 35°C) Humidity: 20% - 80% RH Atmospheric pressure: 86 kPa - 106 kPa
HDMI Input		RGB / 60Hz (640×480, 800×600, 1024×768) YUV / 60Hz (480i, 480p, 720p, 1080i, 1080p) YUV / 50Hz (576i, 576p, 720p, 1080i, 1080p) 3840×2160 / 24Hz, 3840×2160 / 25Hz, 3840×2160 / 30Hz, 3840×2160 / 50Hz, 3840×2160 / 60Hz

Other Information

Recycling/Licenses

WEEE (Waste Electronic Electric Equipment)
European Directive 2012/19/EU



This symbol on the product or on its packaging indicates that this product must not be disposed of with your household waste. Instead, it is your responsibility to dispose of your waste equipment by handing it over to a designated collection point for the recycling of waste electrical and electronic equipment. The separate collection and recycling of your waste equipment at the time of disposal will help to conserve natural resources and ensure that it is recycled in a manner that protects human health and the environment. For more information about where you can drop off your waste equipment for recycling, please contact your local city office, your household waste disposal service or the shop where you purchased the product.

Batteries



In accordance with the Battery Directive, used batteries should not be disposed of in the domestic waste. Dispose your batteries in the collection containers specific for this purpose in retail stores.

ROHS (Restriction of Hazardous Substance)
European Directive 2011/65/EU



This European directive limits the use of dangerous and hazardous substances which are difficult to recycle.

This allows recycling easily the EEE and contributes to the safeguard of the environment.

Substances included in this product match to the RoHS directive.



The terms HDMI and HDMI High-Definition Multimedia Interface, and the HDMI Logo are trademarks or registered trademarks of HDMI Licensing Administrator, Inc. in the United States and other countries.



Dolby, Dolby Vision, Dolby Audio, and the double-D symbol are trademarks of Dolby Laboratories Licensing Corporation. Manufactured under license from Dolby Laboratories. Confidential unpublished works. Copyright © 1992–2021 Dolby Laboratories. All rights reserved.



For DTS patents, see http://patents.dts.com. Manufactured under license from DTS Licensing Limited. DTS, DTS-HD Master Audio, DTS-HD, Virtual:X, and the DTS-HD logo are registered trademarks or trademarks of DTS, Inc. in the United States and other countries. © 2021 DTS, Inc. ALL RIGHTS RESERVED.

SIMPLIFIED EU DECLARATION OF CONFORMITY

Hereby, Hisense Visual Technology Co., Ltd. declares that the radio equipment type [ERF3A80(0012) / ERF3B80H(0012) / ERF3C80H(0012) / ERF3D80H(0012) / ERF3E80H(0012) / ERF3I80H(0012) / ERF3AB80H / ERF3N80H / ERF3F90H / ERF3A52 / ERF3C96H / ERF2I36H / ERF2F36H / ERF2J36H / ERF2K36H / ERF2L36H / ERF2M36H / ERF2N36H / ERF2O36H / ERF2P36H / 43E7HQ / 43E77HQ / 43E78HQ / 43E79HQ / 43E7HQCH / 43E77HQCH / 43E79HQNE / 43E7HQTUK / 43E77HQTUK / 50E7HQ / 50E77HQ / 50E78HQ / 50E79HQ / 50E7HQCH / 50E77HQCH / 50E79HQNE / 50E7HQTUK / 50E77HQTUK / 55E7HQ / 55E77HQ / 55E78HQ / 55E79HQ / 55E7HQCH / 55E77HQCH / 55E79HQNE / 55E7HQTUK / 55E77HQTUK / 65E7HQ / 65E77HQ / 65E78HQ / 65E79HQ / 65E7HQCH / 65E77HQCH / 65E79HQNE / 65E7HQTUK / 65E77HQTUK / 70E7HQ / 70E77HQ / 70E78HQ / 70E79HQ / 70E7HQCH / 70E77HQCH / 70E79HQNE / 70E7HQTUK / 70E77HQTUK] is in compliance with Directive 2014/53/EU. The full text of the EU declaration of conformity is available at the following internet address: https://global.hisense.com/support/certificate-download/.

For Great Britain:

SIMPLIFIED UK DECLARATION OF CONFORMITY

Hereby, Hisense Visual Technology Co., Ltd. declares that the radio equipment type [ERF3A80(0012) / ERF3B80H(0012) / ERF3C80H(0012) / ERF3D80H(0012) / ERF3E80H(0012) / ERF3I80H(0012) / ERF3AB80H / ERF3N80H / ERF3F90H / ERF3A52 / ERF3C96H / ERF2I36H / ERF2F36H / ERF2J36H / ERF2K36H / ERF2L36H / ERF2M36H / ERF2N36H / ERF2O36H / ERF2P36H / 43E7HQ / 43E77HQ / 43E78HQ / 43E79HQ / 43E7HQCH / 43E77HQCH / 43E79HQNE / 43E7HQTUK / 43E77HQTUK / 50E7HQ / 50E77HQ / 50E78HQ / 50E79HQ / 50E7HQCH / 50E77HQCH / 50E79HQNE / 50E7HQTUK / 50E77HQTUK / 55E7HQ / 55E77HQ / 55E78HQ / 55E79HQ / 55E7HQCH / 55E77HQCH / 55E79HQNE / 55E7HQTUK / 55E77HQTUK / 65E7HQ / 65E77HQ / 65E78HQ / 65E79HQ / 65E7HQCH / 65E77HQCH / 65E79HQNE / 65E7HQTUK / 65E77HQTUK / 70E7HQ / 70E77HQ / 70E78HQ / 70E79HQ / 70E7HQCH / 70E77HQCH / 70E79HQNE / 70E7HQTUK / 70E77HQTUK] is in compliance with Radio Equipment Regulations 2017. The full text of the UK declaration of conformity is available at the following internet address: https://global.hisense.com/support/certificate-download/.

THIS PRODUCT IS LICENSED UNDER THE AVC PATENT PORTFOLIO LICENSE FOR THE PERSONAL USE OF A CONSUMER OR OTHER USES IN WHICH IT DOES NOT RECEIVE REMUNERATION TO (i) ENCODE VIDEO IN COMPLIANCE WITH THE AVC STANDARD ("AVC VIDEO") AND/OR (ii) DECODE AVC VIDEO THAT WAS ENCODED BY A CONSUMER ENGAGED IN A PERSONAL ACTIVITY AND/OR WAS OBTAINED FROM A VIDEO PROVIDER LICENSED TO PROVIDE AVC VIDEO. NO LICENSE IS GRANTED OR SHALL BE IMPLIED FOR ANY OTHER USE. ADDITIONAL INFORMATION MAY BE OBTAINED FROM MPEG LA, L.L.C. SEE HTTP://WWW.MPEGLA.COM

EPREL Registration Information

Model identifier	Eprel registration number	Model identifier	Eprel registration number
43E7HQ	1048350	55E7HQ	1049156
43E77HQ	1048382	55E77HQ	1049175
43E78HQ	1048423	55E78HQ	1049180
43E79HQ	1048391	55E79HQ	1049186
43E7HQCH	1048393	55E7HQCH	1049192
43E77HQCH	1048399	55E77HQCH	1049199
43E79HQNE	1048402	55E79HQNE	1049201
43E7HQTUK	1048407	55E7HQTUK	1049203
43E77HQTUK	1048408	55E77HQTUK	1049205
50E7HQ	1034490	65E7HQ	1051210
50E77HQ	1034494	65E77HQ	1051223
50E78HQ	1034496	65E78HQ	1051225
50E79HQ	1034497	65E79HQ	1051312
50E7HQCH	1034499	65E7HQCH	1051386
50E77HQCH	1034502	65E77HQCH	1051389
50E79HQNE	1034505	65E79HQNE	1051523
50E7HQTUK	1034510	65E7HQTUK	1051593
50E77HQTUK	1034514	65E77HQTUK	1051599
70E7HQ	1300301	70E77HQCH	1300636
70E77HQ	1300630	70E79HQNE	1300638
70E78HQ	1300632	70E7HQTUK	1300639
70E79HQ	1300634	70E77HQTUK	1300641
70E7HQCH	1300635		