60CM COMBI-STEAM
CARE AND MAINTENANCE

Get to know your appliance	3
Dry the oven	4
Clean the oven	5
Steam clean the oven	7
Descale the oven	8
Adjust the shelves	9
Fit the sliding shelves	10
Fit the clip-on runners	11
Remove the side ladders	12
Open handleless oven manually	13
Remove the oven door	14
Cleaning the oven door	15
Remove the inner pane	16
Refit the inner pane	19
Remove the middle pane	20
Refit the middle pane	21
Refit the oven door	23
Troubleshooting	24
Fault codes	27

FISHER & PAYKEL

NZ AU UK IE SG

60CM COMBI-STEAM OVEN

COMBI-STEAM

OS60SAMHUNB5, OS60SAMHUNG5, OS60SAMHUB5, OS60SAMHUG5, OS60SACHUDX5, OS60SAMVUB5, OS60SAMVUG5, OS60SACVUDX5, OS60SAMVTB5, OS60SAMVTG5, OS60SACVTDX5

COMPACT COMBI-STEAM

OS60NAMHUNB5, OS60NAMHUNG5, OS60NAMHUB5, OS60NAMHUG5, OS60NACHUDX5, OS60NAMVUB5, OS60NAMVUG5, OS60NACVUDX5, OS60NAMVTB5, OS60NAMVTG5, OS60NACVTDX5

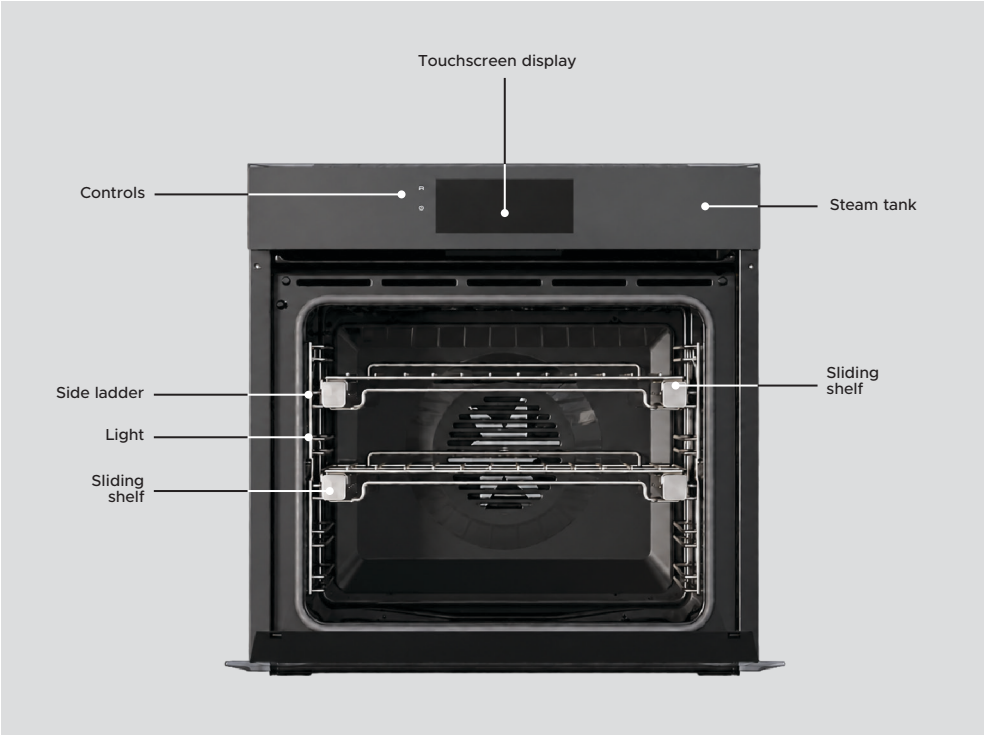

All imagery shown in this guide is representative. Your product may differ.

Run a DRY cycle after using steam methods or functions to remove moisture from the oven.

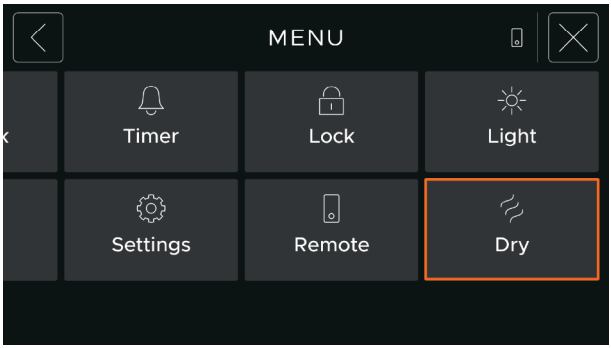

1. Go to MENU and select DRY.

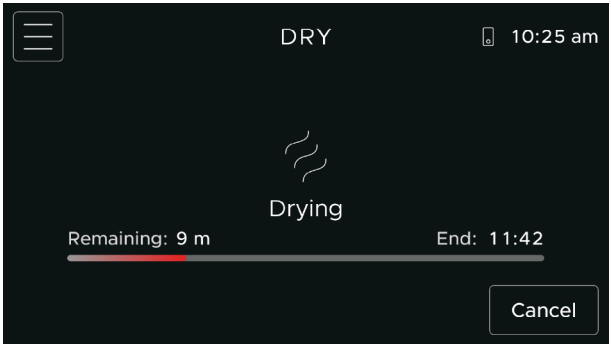

2. Wipe any excess water from the base of the oven, then press START.

A progress bar will show while the drying cycle is running.

CLEAN THE OVEN

Key steps to maintain your oven

- Clean surfaces with a damp cloth, and dry them with a lint-free cloth.
- Clean the door after each use.
- Run regular CLEAN cycles.
- Descale to remove mineral buildup.

We do not recommend:

- Scouring pads
- Stainless steel cleaners or polishes
- Abrasive, acidic, alkaline or solvent cleaning products.

Always allow the oven to cool to a safe temperature. Turn off the power supply before doing any manual cleaning or maintenance.

DO NOT CLEAN

Oven seal

Do not clean or remove this part. Take care not to rub, damage or move the oven seal.

CLEAN AFTER EACH USE

Oven door

Wipe clean with a soft cloth and a mixture of warm water and dishwashing liquid.

For stubborn stains

Mix baking soda and warm water with a non-abrasive scrubbing pad, then wipe dry with a soft, lint-free cloth.

Oven cavity

Clean up easy-to-reach spills, food or grease stains to prevent them becoming baked on.

Clean enamel surfaces with a damp cloth and a solution of hot water and mild detergent or an ammonia-based cleaner. Wipe dry with a soft cloth.

For stubborn spills

You can remove the oven door for greater cleaning access. See 'Remove the oven door'.

Temperature sensor

Wipe clean with a damp cloth and dishwashing liquid. Wipe dry with a microfibre cloth.

- Do not put in the dishwasher.
- Do not immerse in water.
- Do not clean with oven cleaner.

CLEAN REGULARLY

Racks, side ladders, wire shelves, pans and trays

Clean with a mild detergent and hot water.

Water tank

We recommend emptying any water from the tank after each use. Clean the tank with a mild detergent and warm water taking care not to wash the silicone grease off the hose valve. Rinse the tank and hose thoroughly, then air dry or wipe dry with a microfibre cloth. Ensure the hose is attached securely.

Sliding shelves

Wipe clean with a damp cloth and dishwashing liquid.

- Do not wipe off the white lubricant (visible when the shelf is extended).
- Do not put in the dishwasher.
- Do not immerse in water.
- Do not clean with oven cleaner.

Oven door frame and plastic corner clips

Clean with mild detergent and hot water. Wipe dry with a microfibre cloth.

Control Panel

Use only a soft, damp cloth with mild detergent. Anything else may scratch and damage the control panel glass and screen.

- Do not use oven cleaners, harsh or abrasive cleaners.
- Do not use scouring pads, steel wool or sharp metal scrapers.

Dial

Clean with a solution of mild detergent and hot water, then wipe dry.

- Do not use stainless steel or oven cleaner.

Stainless steel surfaces

Clean with mild detergent and hot water. Wipe dry with a microfibre cloth.

For stubborn stains, use a suitable stainless steel cleaner and polish.

- Ensure that your stainless steel cleaner does not contain chlorine compounds as these are corrosive and may damage the appearance of your oven.
- Always rub the stainless steel in the direction of the steel grain.

Glass panes

Wipe clean with a soft cloth and a mixture of warm water and dishwashing liquid.

You can take the inner pane out to clean it. See 'Remove the inner pane.'

Run **STEAM CLEAN** regularly to help lift stubborn stains from inside your oven. The steam clean cycle has three stages:

FILL TANK with water	WIPE glass and cavity	DRY with heating cycle

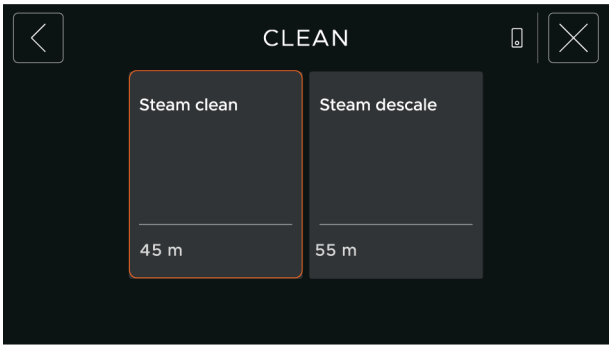

1. Go to **MENU** and select **CLEAN**, then **STEAM CLEAN**.

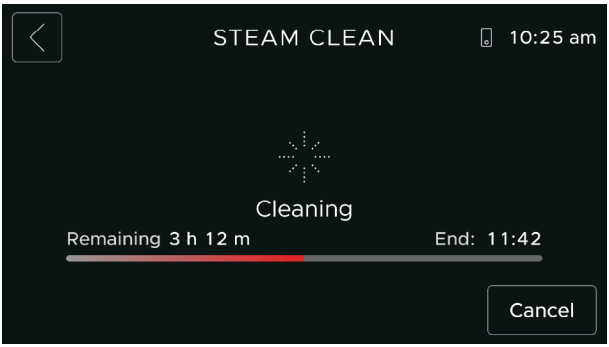

2. Remove all shelves, side ladders, and accessories and fill the water tank, then start the cycle. A progress bar will show while **STEAM CLEAN** is running, and while a cooling cycle is running.

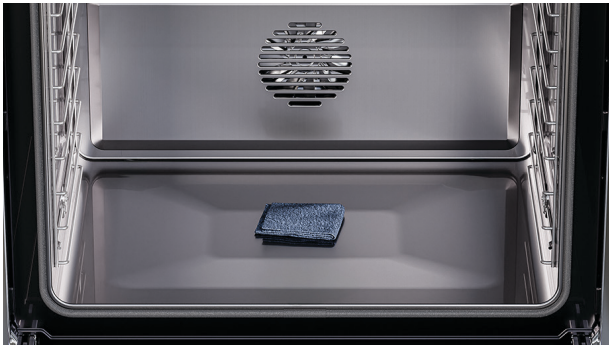

3. Wipe the oven and door glass with a soft cloth, and follow the onscreen instructions to start the **DRY** function.

Run DESCALE when alerted to remove mineral build-up in your oven and maintain steam functions. The descale cycle has three stages:

FILL TANK with solution	FLUSH with fresh water	FINISH after 55 mins

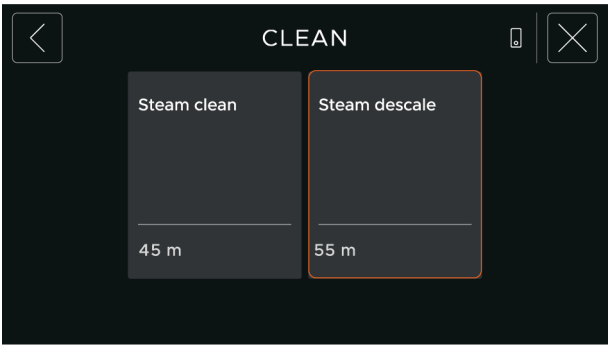

1. Go to MENU and select CLEAN, then STEAM DESCALE.

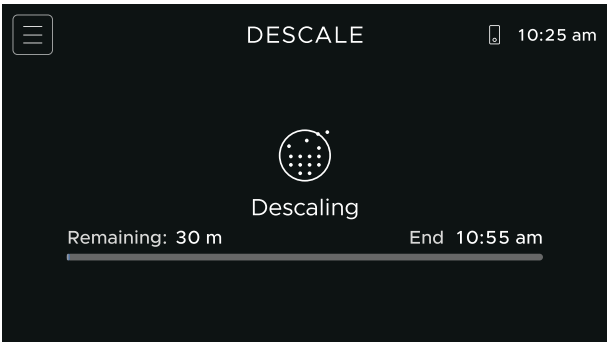

2. Remove the tank and fill it with descaling solution, then reinsert the tank to start the cycle.

A progress bar will show at each step of the descaling process.

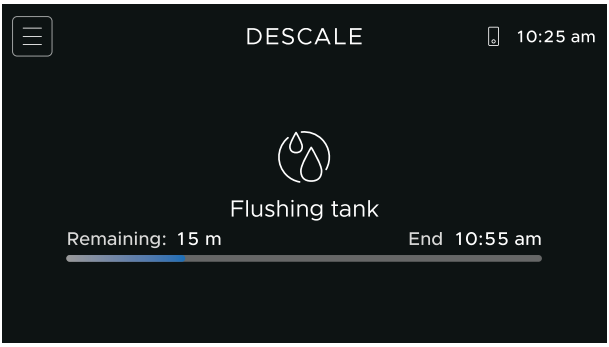

3. Follow the onscreen instructions for each step of the process.

When DESCALE is complete, wipe the base of the cavity to remove any excess moisture.

1. To remove, grip at the front, holding the wire shelf and frame together, then tilt and pull shelf out.

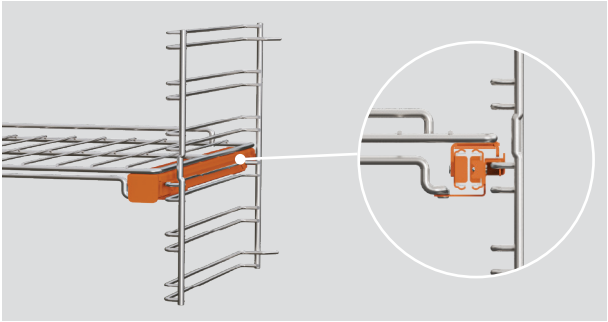

2. To refit, place the shelf on top of the side ladders, and push into the oven, with the guard rail at the back.

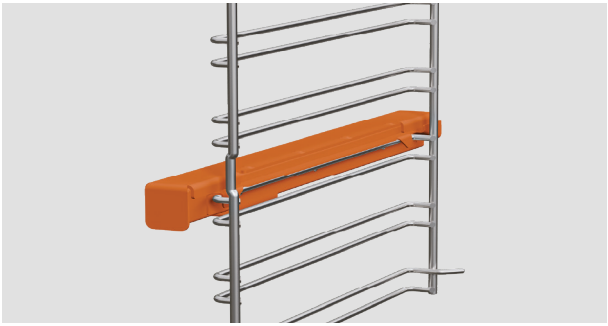

3. Ensure the rear tags are hooked over the side ladders on both sides.

Wire racks

Tilt and pull to remove.

To refit, slide rack between rails on the side ladder. Ensure the guard rail is at the back.

FIT THE SLIDING SHELVES

Remove the sliding shelves to reposition them or to make it easier to clean inside the oven. Make sure the oven has cooled down first.

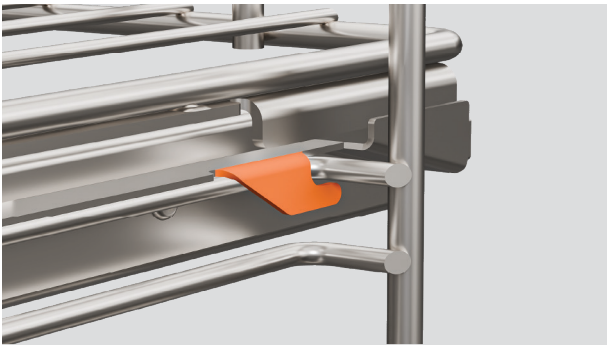

1. Ensure the slides are positioned the correct way around, with the triangular tab at the front.

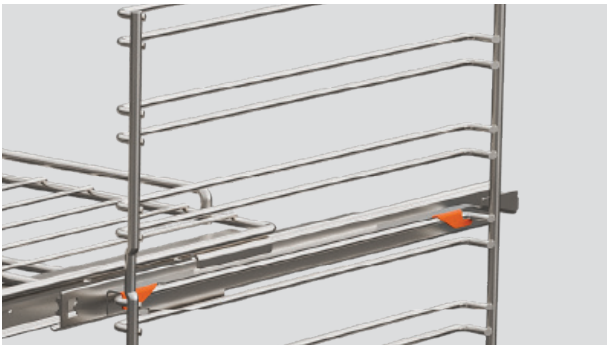

2. Fit the top clips over the side ladder. The front clip should be fitted as close to the front of the slide ladder as possible.

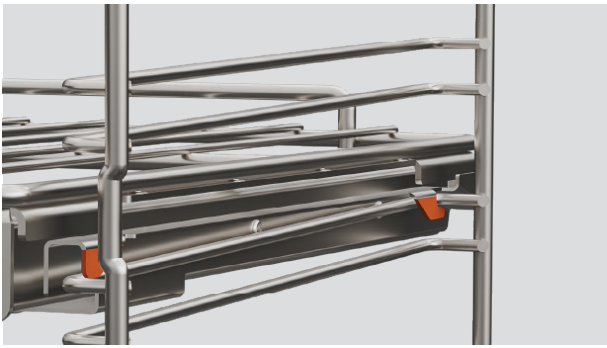

3. Rotate the slides down and click the bottom clips into place.

FIT THE CLIP-ON RUNNERS

Remove the clip-on runners to reposition them or to make it easier to clean inside the oven. Make sure the oven has cooled down first.

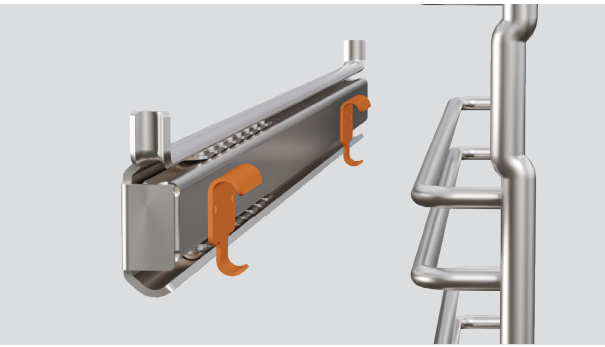

1. Ensure the runners are positioned the correct way around, with the metal catch facing you.

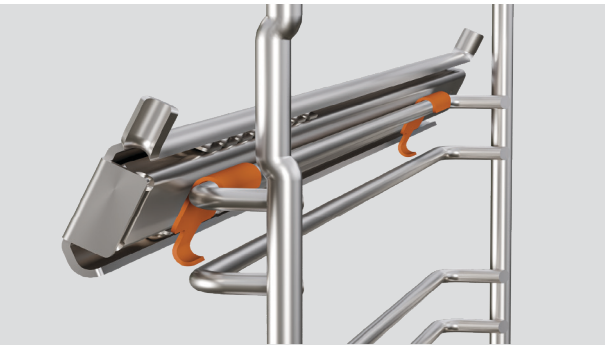

2. Fit the top clips over the side ladder. The front clip should be fitted as close to the front of the slide ladder as possible.

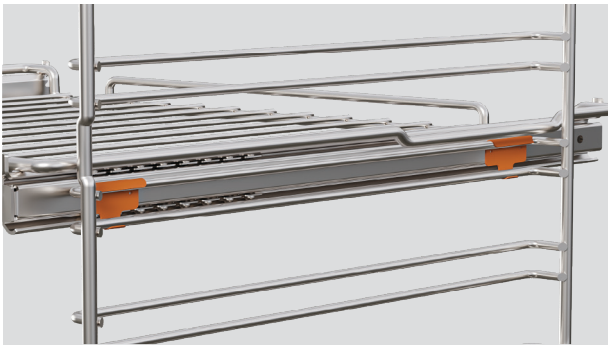

3. Rotate the runners down and click the bottom clips into place.

REMOVE THE SIDE LADDERS

Remove the side ladders to access the oven lights or to make it easier to clean inside the oven. Make sure the oven has cooled down first.

1. Remove all shelves, then unscrew the nut that holds the ladder in position. Use your fingers or a coin to loosen it.

2. Pull the base of the ladder clear of the screw, then pull the ladder down to separate it from the studs at the top.

3. To replace, fit the top of the ladder into the studs, then push the base of the ladder flush against the side of the oven.

Refit the nut at the base of the ladder, and tighten it to secure.

OPEN HANDLELESS OVEN MANUALLY

You can open your handleless oven door manually during a power cut or while the oven is in Sabbath mode by using the supplied door-opening tool.

1. Hold the door opener by the loop, with the short end pointing to the right.

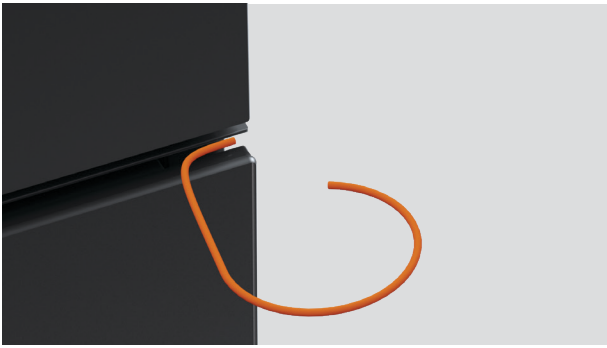

2. Carefully insert the door opener at the top right of the oven, between the centre louvre and the top of the door.

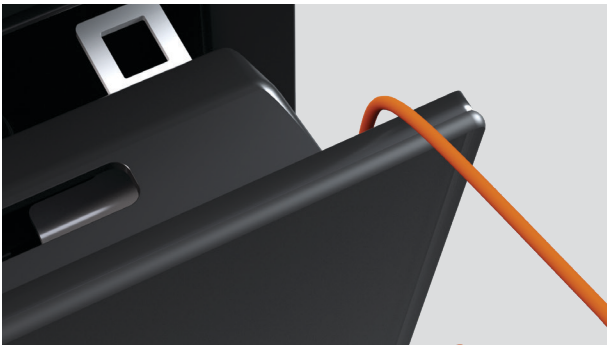

3. Rotate the door opener 90 degrees clockwise, then gently pull the door open.

Do not force the door opener if it doesn't turn freely as this could cause damage.

REMOVE THE OVEN DOOR

The oven door can be removed for better cleaning access. Make sure the oven has cooled down before removing the door.

The door is heavy and should be lifted by two people. Take care while removing and refitting.

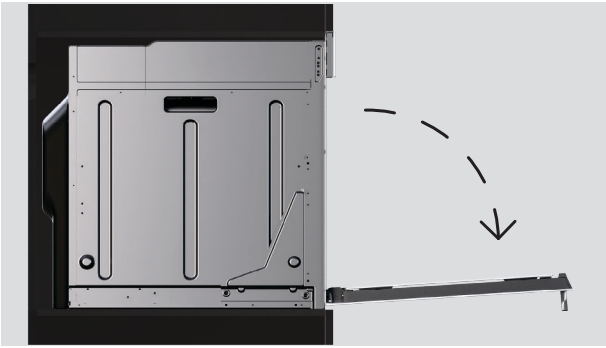

1. Open the door fully, and locate the hinge locks on either side of the door.

Push the locks upwards to release.

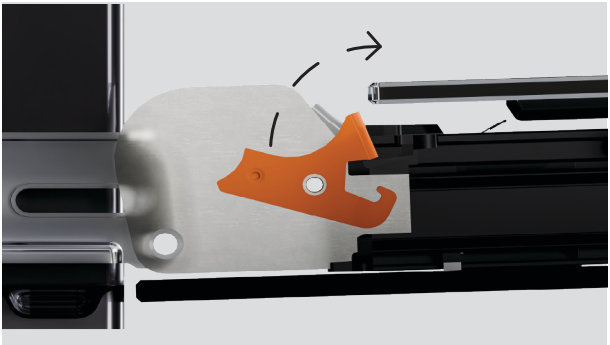

2. Pull the locks up to release.

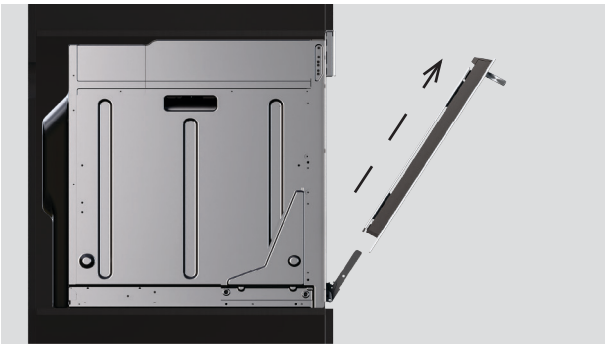

3. Hold the door on both sides, and partially close it. Carefully pull the door away from the hinges to remove it, and place on a soft, clean and flat surface.

Taking the door apart

The oven door is made up of multiple glass panes. The number of panes may vary depending on your model.

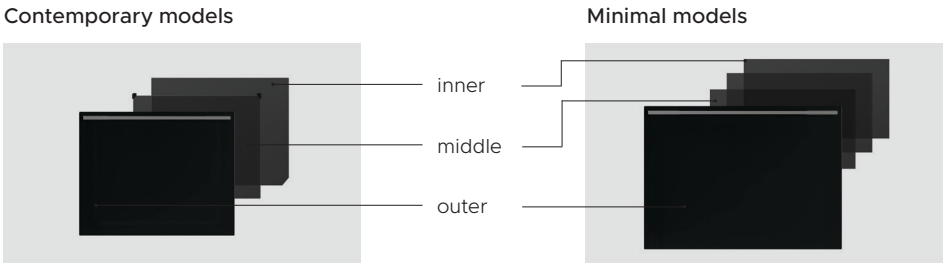

Before you begin

- Follow the instructions carefully. Refitting the glass incorrectly may result in damage to the oven and could void your warranty.
- Do not use the oven without all glass correctly in place.
- Take care when handling the glass. Avoid bumping the corners or edges against any surface. This may result in the glass shattering.
- Do not use oven cleaners or any other harsh/abrasive cleaners, cloths, scouring pads, steel wool or sharp metal scrapers to clean the glass surfaces. These scratch the glass and may damage the coating, which could result in the glass cracking or shattering.
- If you notice any sign of damage on any of the glass panes (such as chipping or cracks), do not use the oven. Contact a Fisher & Paykel trained and supported service technician or Customer Care.
- If the glass feels difficult to remove or replace, do not force it. Contact a Fisher & Paykel trained and supported service technician or Customer Care.

Series 9 and 11 models.

The oven door is made up of multiple glass panes. You can remove the inner pane for cleaning, but take care when handling the glass. It may shatter if you bump corners or edges.

- Do not force the glass if it feels difficult to remove or refit.
- Do not use the oven without all glass correctly in place.
- Do not use the oven if you notice damage, such as chips or cracks, on the glass.

Follow the instructions carefully. Refitting the glass incorrectly may damage the oven and void your warranty. Contact Customer Care for support if required.

1. Open the door fully. Using a suitable tool, gently rotate the tabs out on either side of the oven door.

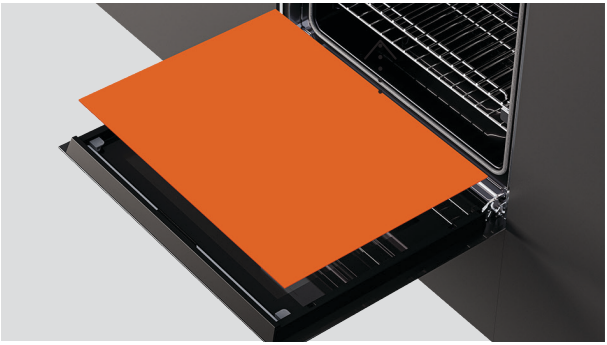

2. Pull the glass toward the top of the door to unhook. Lift the pane up to remove it, and place it on a flat, protected surface. Clean the glass as required. See 'Care and cleaning.'

3. To refit, make sure the glass is facing the correct way. The logo should be closest to the bottom of the door but orientated so you can read it.

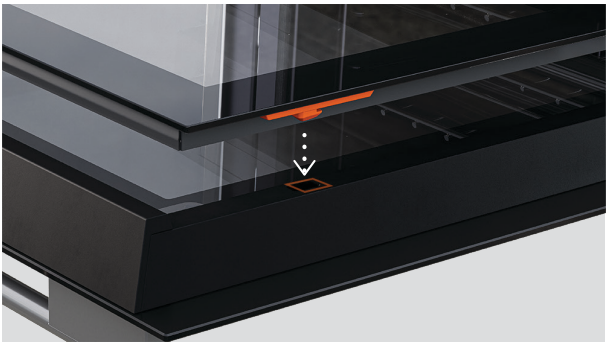

4. Lower the pane carefully onto the door to fit into the extrusions.

5. Close the tabs and gently press the glass. Close the door.

Series 7 models.

The oven door is made up of multiple glass panes. You can remove the inner pane for cleaning, but take care when handling the glass. It may shatter if you bump corners or edges.

- Do not force the glass if it feels difficult to remove or refit.
- Do not use the oven without all glass correctly in place.
- Do not use the oven if you notice damage, such as chips or cracks, on the glass.

Follow the instructions carefully. Refitting the glass incorrectly may damage the oven and void your warranty. Contact Customer Care for support if required.

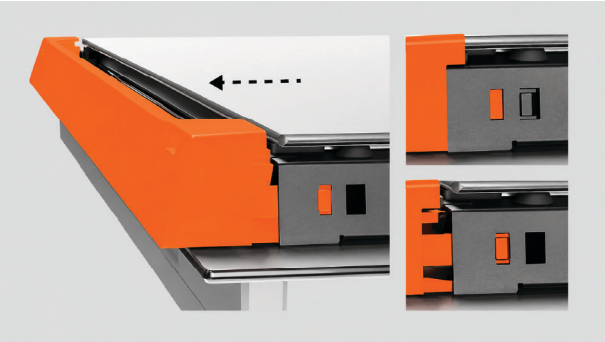

1. Push tabs in on both sides of the glass retainer. Pull the retainer up until the tabs relocate in the uppermost hole.

2. Pull the pane toward the top of the door until clear of the brackets, then lift out.

Do not angle the pane too much as this may damage the glass.

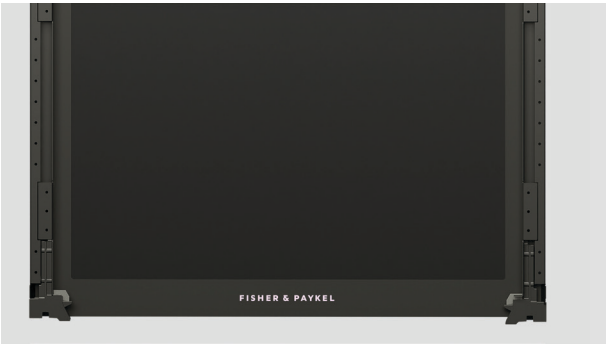

1. Ensure the glass is the right way up before refitting.

The logo should be readable at the bottom of the door.

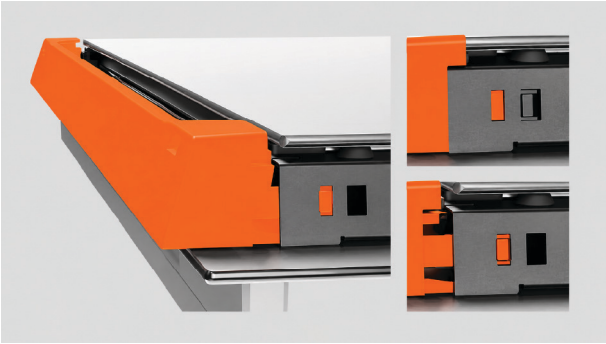

2. Slide the bottom of the pane into the upper brackets at the bottom of the door.

Lower the pane into place, resting on the brackets at the top of the door.

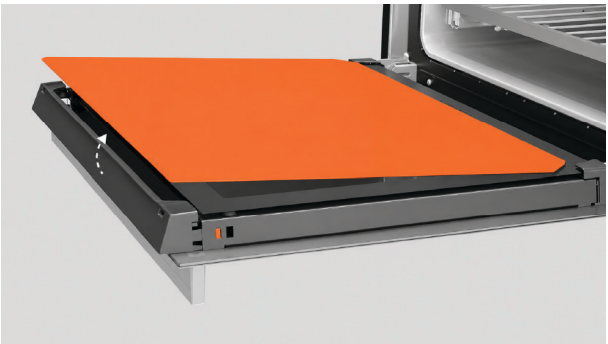

3. Replace the glass retainer, ensuring it clicks securely into place.

Series 7 models.

The oven door is made up of multiple glass panes. You can remove the inner pane for cleaning, but take care when handling the glass. It may shatter if you bump corners or edges.

- Do not force the glass if it feels difficult to remove or refit.
- Do not use the oven without all glass correctly in place.
- Do not use the oven if you notice damage, such as chips or cracks, on the glass.

Follow the instructions carefully. Refitting the glass incorrectly may damage the oven and void your warranty. Contact Customer Care for support if required.

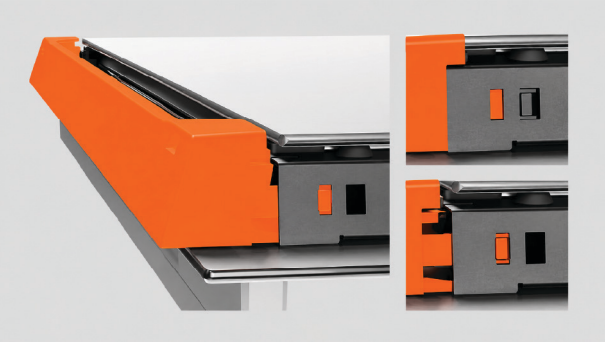

1. Push tabs in on both sides of the glass retainer again and remove the retainer.

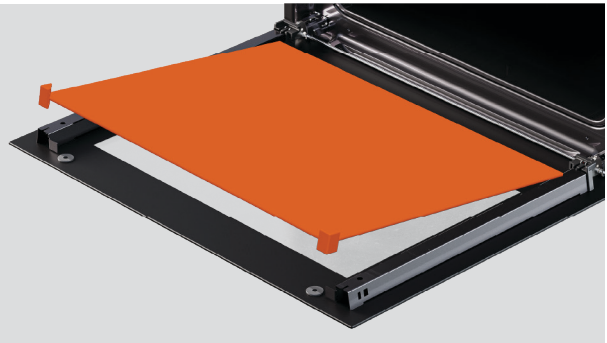

2. Pull the pane toward the top of the door until clear of the brackets, then lift out.

The rubber stoppers should remain attached to the glass.

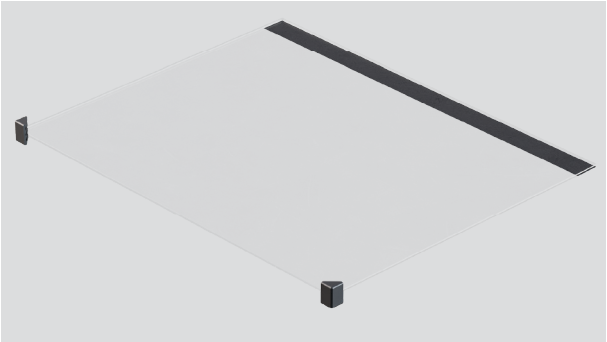

1. Ensure the glass is the right way up before refitting.

The warning text at the bottom of the glass should face towards the front of the door.

2. Ensure the rubber stoppers are attached to the glass and positioned correctly.

The longer side should be running down the side of the pane.

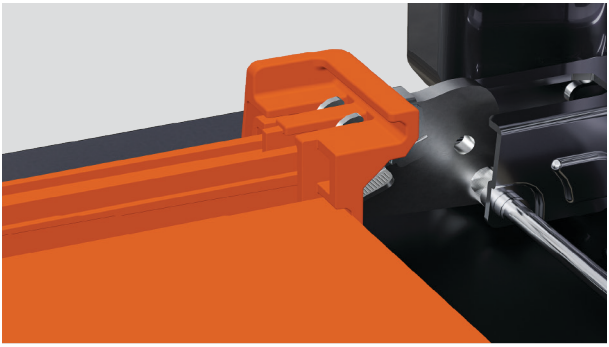

3. Slide the bottom of the glass into the lower brackets at the bottom of the door. Lower the glass into place, with the rubber stoppers resting on the outer pane of glass.

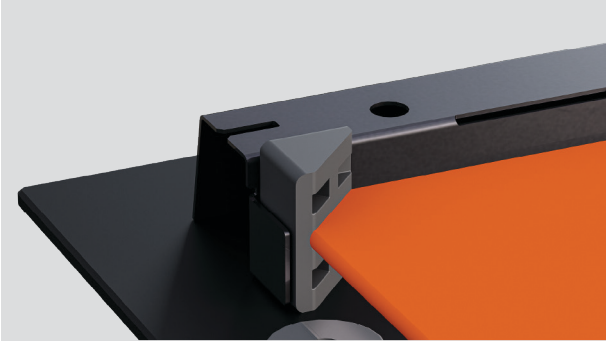

4. Lower the glass into place, with the rubber stoppers resting on the outer pane of glass.

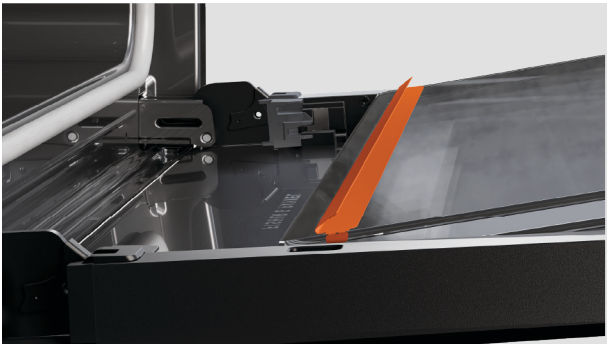

When replacing the second middle pane, ensure the metal bracket is still in place and correctly positioned at the bottom of the glass.

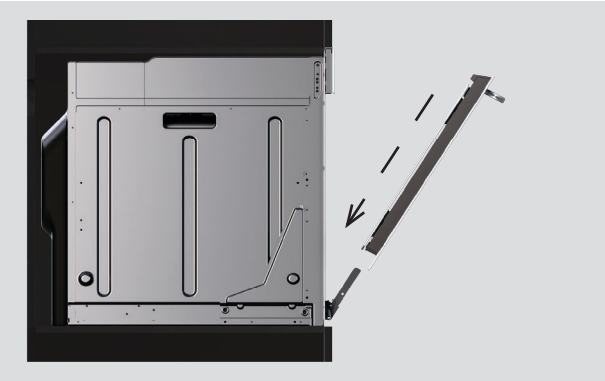

1. Holding the door on both sides, carefully lift door back onto the hinges.

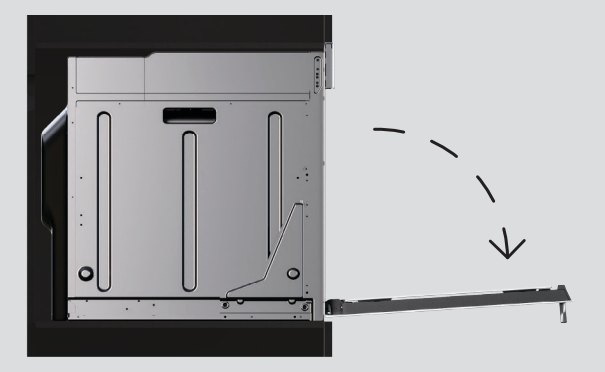

2. Open the door fully.

3. Push each locking lever down and lock into place.

Ensure both hinges are fully locked before closing the door.

General

Why will the product not turn on?

- No power. Make sure it is connected to the power supply and switched on at the wall.
- Check the circuit breaker, or check if there is a power cut in your home or area. If the product still won't turn on, call Customer Care or your Authorised Service Centre.

Why is the display not working?

- The controls may be locked. Press and hold the screen to unlock.

Why isn't the oven heating up?

- If the oven is heating but not reaching the set temperature, the door may not be closed or sealing properly.
- Ensure the door is closed properly and isn't being opened too often, or try removing and refitting the door. Refer to 'Remove the oven door' for instructions.
- If the display is working but the oven is not heating at all, it may be in Demo mode. Call Customer Care or your Authorised Service Centre.

Why is there a minimum temperature I can set?

- For food safety reasons, the oven has factory set minimum temperature settings depending on the function or method selected. Try selecting a different function or method that is designed for lower temperatures.

Why is the fan running while the oven is heating?

- The fan will run as part of the preheating stage to help the oven get up to temperature quickly. Depending on the function or method selected, the fan will turn off after the oven has heated.

Why aren't the lights turning on when I open the door?

- The light bulb(s) may have blown. Refer to 'Replace the oven light'.
- The door may not be closed or sealing properly. Ensure the door is closed properly and isn't being opened too often, or try removing and refitting the door. Refer to 'Remove the oven door' for instructions.

Why isn't the oven door straight?

- The oven door has been fitted incorrectly. Try removing and refitting the door. Refer to 'Remove the oven door' for instructions.

What do I do if the door glass is cracked, chipped or shattered?

- Do not use the oven. Contact a Fisher & Paykel trained and supported service technician or Customer Care.

Why can't I access the oven settings?

- The oven is on or set for automatic cooking and cannot be adjusted. Turn the oven off and on or wait for automatic cooking to finish.

Why is there hot air blowing out of the vents after the oven has turned off?

- The cooling fans will continue to run after the oven is turned off to ensure the oven cools properly. These will automatically turn off once the oven has cooled.

Why is there moisture building up in the oven during cooking?

- Steam and other cooking methods generate moisture. Wait for the oven to cool, then wipe it dry.

Why is the drip tray overflowing?

- The drip tray needs to be cleaned or emptied. Wait for the oven to cool then wipe with a sponge or soft cloth, or lift up to remove and empty.

Why is there a burnt smell coming from the oven?

- There may be food burnt onto the oven base. To prevent drips, we recommend placing a solid tray on a shelf or in side ladders below the perforated dish, and cleaning up any spills as soon as they occur.

Why does the screen say water level is too low when there is still water in the tank?

- The tank needs a minimum amount of water in it to use steam cooking. Refill the tank.

Why does the screen say the tank isn't installed after I replace it?

- The tank may not be fully back in place. Try removing and replacing it and ensure it is pushed fully into the compartment.

Why can't I access steam cooking?

- The oven may need to be descaled. Follow the instructions onscreen or refer to 'Descale the oven.

Why is there a water stain in the base of the oven?

- This can be caused by water hardness. Ensure the oven base is wiped clean regularly after cooking and before running a dry cycle.

Why isn't the steam tank compartment opening or closing?

- There might be something in the way. Check there are no obstructions.
- If the problem persists contact a Fisher & Paykel trained and supported service technician or call Customer Care.

Why does the oven make noises when cooking with steam?

- These are normal sounds made by the steam generator as it boils the water.

Why is the steam generator overheating?

- The oven may need to be descaled. Follow the instructions onscreen or refer to 'Descaling'.
- The water hardness setting may be incorrect for the water hardness in your area. If you live in an area with hard water, you may need to increase the water hardness level in the settings menu.

If there is a fault with your oven, it will beep and display an alert.

What to do

Follow the onscreen instructions or the steps in the following table to try and fix the issue and clear the alert.

Do not turn the oven off at the wall unless it is completely cool. Turning off the power while the oven is hot may damage the oven and its surrounding cabinetry.

FAULT CODE	POSSIBLE CAUSE	WHAT TO DO
A1	The oven has overheated.	• Allow the oven to cool down. • Once the oven has cooled down and the door has unlocked, the alert code will disappear. You can now use the oven.
A2	Door lock error. The door cannot be locked after you start Self clean.	• Turn the oven off and on at the power supply. • Wait 10 seconds for lock to return to its initial position. • Ensure door is closed, then restart Self clean cycle.
A3	Door lock error. The door cannot be unlocked at the end of Self Clean.	• Turn the oven off and on at the power supply. • Press the door a few times to help the lock disengage.
F + number	Technical fault.	• Note down the alert code. • Wait until the cooling fans have stopped and the oven has completely cooled down. • Turn the power to the oven off at the wall. • Contact a Fisher & Paykel trained and supported service technician or Customer Care.

If the fault code disappears, you can continue to use your oven.

If the problem persists, note the fault code and contact Customer Care.

FISHERPAYKEL.COM

© Fisher & Paykel Appliances 2026. All rights reserved.

The models shown in this guide may not be available in all markets and are subject to change at any time.

The product specifications in this guide apply to the specific products and models described at the date of issue. Under our policy of continuous product improvement, these specifications may change at any time.

For current details about model and specification availability in your country, please go to our website or contact your local Fisher & Paykel dealer.

433818A 06.26