60CM PYROLYTIC/MULTI-FUNCTION OVEN
CARE AND MAINTENANCE

Get to know your appliance	3
Clean the oven	4
Run a Self clean cycle	6
Adjust the shelves	7
Fit the sliding shelves	8
Fit the clip-on runners	9
Remove the side ladders	10
Open handleless oven manually	11
Remove the oven door	12
Remove the inner pane	14
Refit the inner pane	18
Remove the middle panes	19
Refit the middle pane	20
Refit the oven door	22
Replace oven light	23
Troubleshooting	24
Fault codes	26

FISHER & PAYKEL

NZ AU UK IE SG

60CM PYROLYTIC/MULTI-FUNCTION OVEN

OB60SAMPUNB5, OB60SAMPUNG5, OB60SAMPUB5, OB60SAMPUG5, OB60SACPUDX5, OB60SAMPTB5, OB60SAMPTG5, OB60SACPTDX5, OB60SAMTB5, OB60SAMTG5, OB60SACTDX5

How to get the best results from your oven

- Download the app to use remote mode and get updates.
- Set up and condition the oven before you use it.
- Run regular CLEAN cycles.
- Register your product to get streamlined service support.

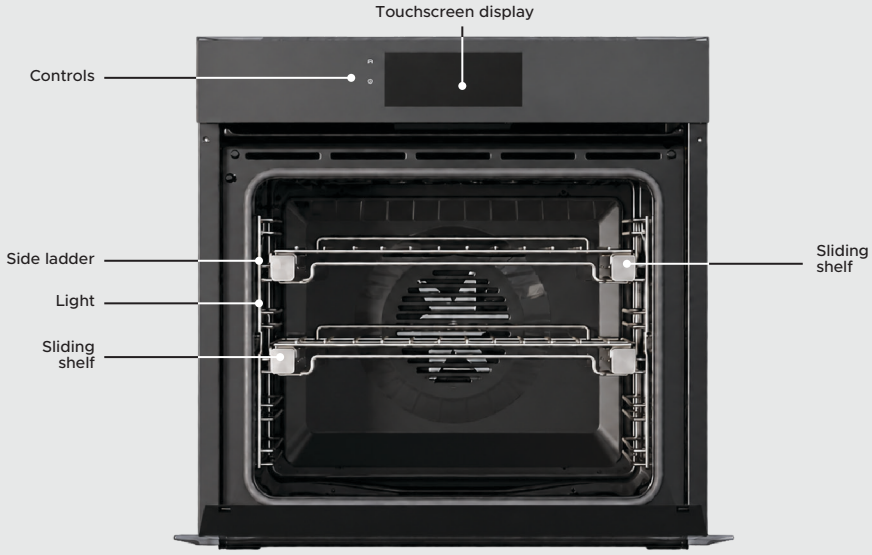

All imagery shown in this guide is representative. Your product may differ.

Key steps to maintain your oven

- Clean surfaces with a damp cloth, and dry them with a lint-free cloth.
- Clean the door after each use.
- Run regular CLEAN cycles.

We do not recommend:

- Scouring pads
- Stainless steel cleaners or polishes
- Abrasive, acidic, alkaline or solvent cleaning products.

Always allow the oven to cool to a safe temperature. Turn off the power supply before doing any manual cleaning or maintenance.

DO NOT CLEAN

Oven seal

Do not clean or remove this part. Take care not to rub, damage or move the oven seal.

CLEAN AFTER EACH USE

Oven door

Wipe clean with a soft cloth and a mixture of warm water and dishwashing liquid.

For stubborn stains. mix baking soda and warm water with a non-abrasive scrubbing pad, then wipe dry with a soft, lint-free cloth.

Oven cavity

Clean up easy-to-reach spills, food or grease stains to prevent them becoming baked on.

Clean enamel surfaces with a damp cloth and a solution of hot water and mild detergent or an ammonia-based cleaner. Wipe dry with a soft cloth.

For stubborn spills, you can remove the oven door for greater cleaning access. See 'Remove the oven door'.

Wired temperature sensor

Wipe clean with a damp cloth and dishwashing liquid. Wipe dry with a microfibre cloth.

- Do not put in the dishwasher.
- Do not immerse in water.
- Do not clean with oven cleaner.

Racks, side ladders, wire shelves, pans and trays

Clean with a mild detergent and hot water.

Sliding shelves

Wipe clean with a damp cloth and dishwashing liquid.

- Do not wipe off the white lubricant (visible when the shelf is extended).
- Do not put in the dishwasher.
- Do not immerse in water.
- Do not clean with oven cleaner.

Oven door frame and plastic corner clips

Clean with mild detergent and hot water. Wipe dry with a microfibre cloth.

Control Panel

Use only a soft, damp cloth with mild detergent. Anything else may scratch and damage the control panel glass and screen.

- Do not use oven cleaners, harsh or abrasive cleaners.
- Do not use scouring pads, steel wool or sharp metal scrapers.

Dial

Clean with a solution of mild detergent and hot water, then wipe dry. Do not use stainless steel or oven cleaner.

Stainless steel surfaces

Clean with mild detergent and hot water. Wipe dry with a microfibre cloth.

For stubborn stains, use a suitable stainless steel cleaner and polish.

- Ensure that your stainless steel cleaner does not contain chlorine compounds as these are corrosive and may damage the appearance of your oven.
- Always rub the stainless steel in the direction of the steel grain.

Glass panes

Wipe clean with a soft cloth and a mixture of warm water and dishwashing liquid.

You can take the inner pane out to clean it. See 'Remove the inner pane.'

RUN A SELF CLEAN CYCLE

The pyrolytic SELF CLEAN cycles run at an extremely high temperature to burn off food and grease build-up in your oven. Run a CLEAN cycle annually to prevent burnt-on stains.

Ensure the kitchen is well ventilated.

1. Go to MENU and select CLEAN, SELF CLEAN, then STANDARD CLEAN or LIGHT CLEAN.

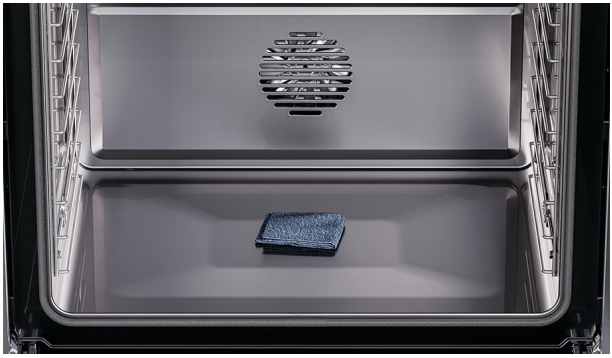

2. Remove all shelves, side ladders, and accessories. Clean the oven door to avoid staining, and follow the onscreen instructions to start the cycle.

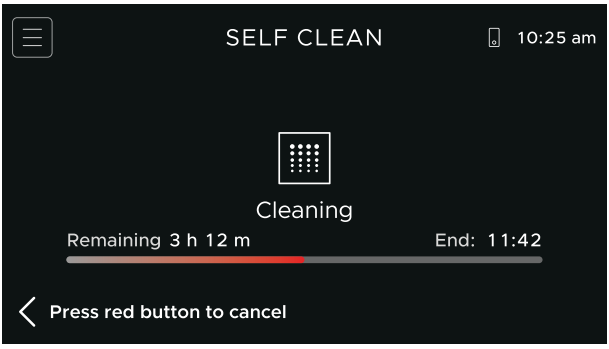

3. A progress bar will show while the cleaning cycle is running, and while a cooling cycle is running.

After the cooling cycle, remove the ash and wipe the oven clean with a soft cloth.

Sliding shelves

1. To remove, grip at the front, holding the wire shelf and frame together, then tilt and pull shelf out.

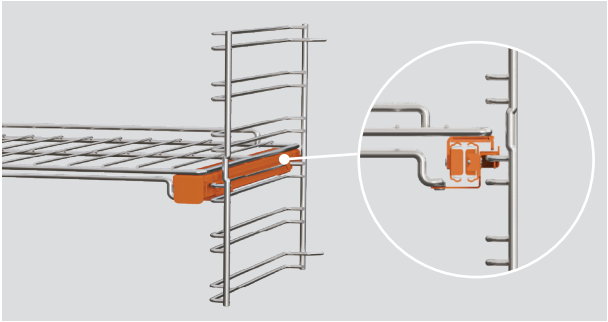

2. To refit, place the shelf on top of the side ladders, and push into the oven, with the guard rail at the back.

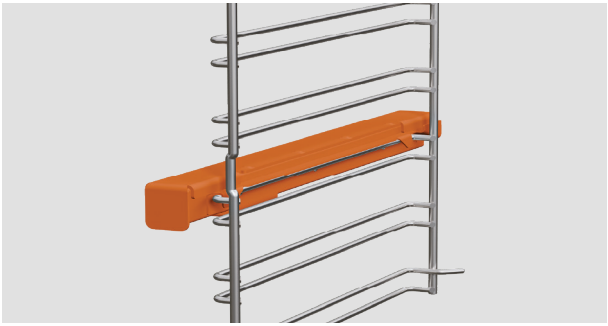

3. Ensure the rear tags are hooked over the side ladders on both sides.

Wire racks

Tilt and pull to remove.

To refit, slide rack between rails on the side ladders. Ensure the guard rail is at the back.

FIT THE SLIDING SHELVES

Remove the sliding shelves to reposition them or to make it easier to clean inside the oven. Make sure the oven has cooled down first.

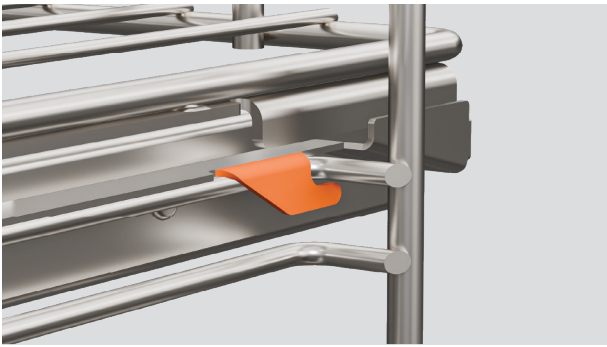

1. Ensure the slides are positioned the correct way around, with the triangular tab at the front.

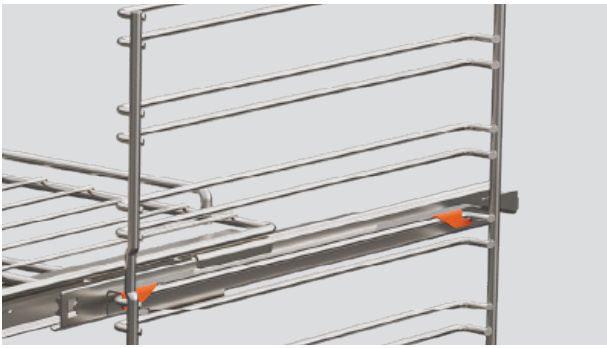

2. Fit the top clips over the side ladder. The front clip should be fitted as close to the front of the slide ladder as possible.

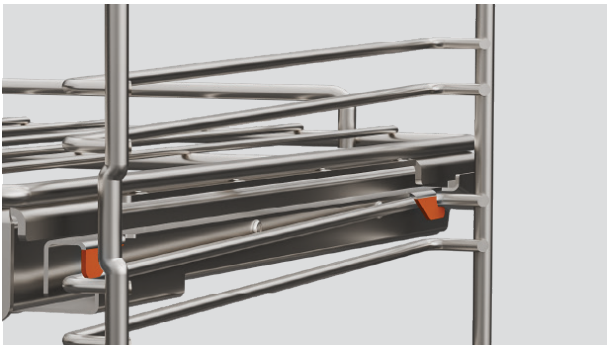

3. Rotate the slides down and click the bottom clips into place.

FIT THE CLIP-ON RUNNERS

Remove the clip-on runners to reposition them or to make it easier to clean inside the oven. Make sure the oven has cooled down first.

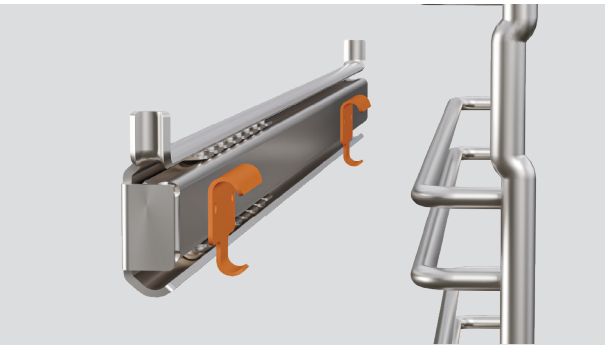

1. Ensure the runners are positioned the correct way around, with the metal catch facing you.

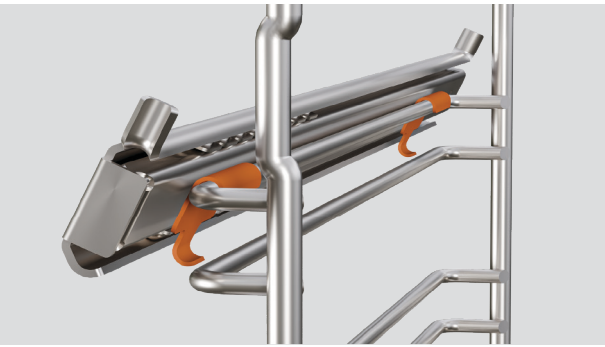

2. Fit the top clips over the side ladder. The front clip should be fitted as close to the front of the slide ladder as possible.

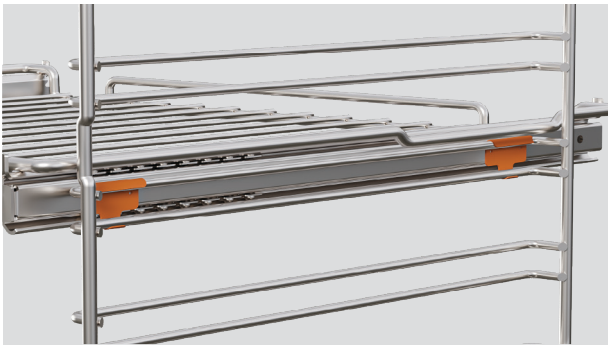

3. Rotate the runners down and click the bottom clips into place.

REMOVE THE SIDE LADDERS

Remove the side ladders to access the oven lights or to make it easier to clean inside the oven. Make sure the oven has cooled down first.

1. Remove all shelves, then unscrew the nut that holds the ladder in position. Use a coin to loosen if required.

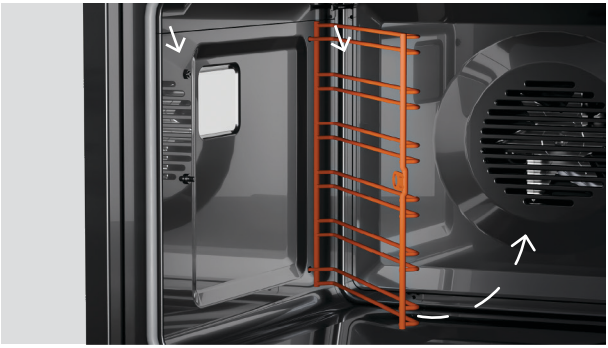

2. Pull the front of the ladder clear of the screw and slide forward to remove.

3. To replace, slide the ladder prongs into the holes, ensuring the ladder sits flush against the side of the oven. Align the tab with the screw and secure with the nut.

Use a coin to tighten if required.

OPEN HANDLELESS OVEN MANUALLY

You can open your handleless oven door manually during a power cut or while the oven is in Sabbath mode by using the supplied door-opening tool.

1. Hold the door opener by the loop, with the short end pointing to the right.

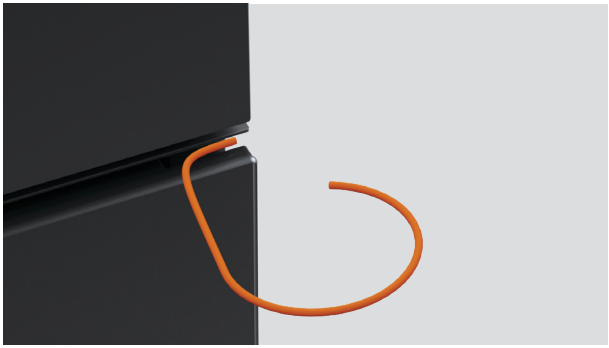

2. Carefully insert the door opener at the top right of the oven, between the centre louvre and the top of the door.

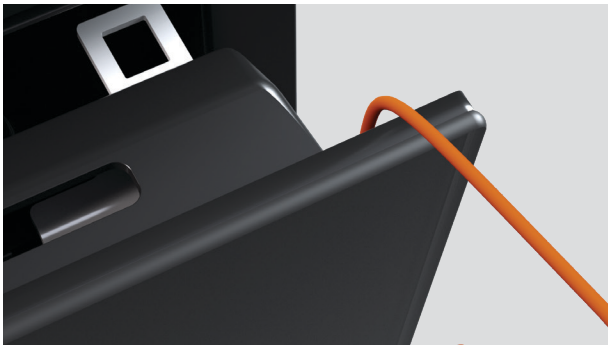

3. Rotate the door opener 90 degrees clockwise, then gently pull the door open.

Do not force the door opener if it doesn't turn freely as this could cause damage.

REMOVE THE OVEN DOOR

The oven door can be removed for better cleaning access. Make sure the oven has cooled down before removing the door.

The door is heavy and should be lifted by two people. Take care while removing and refitting.

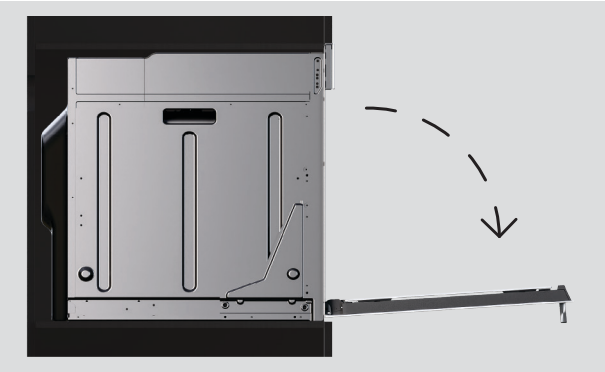

1. Open the door fully.

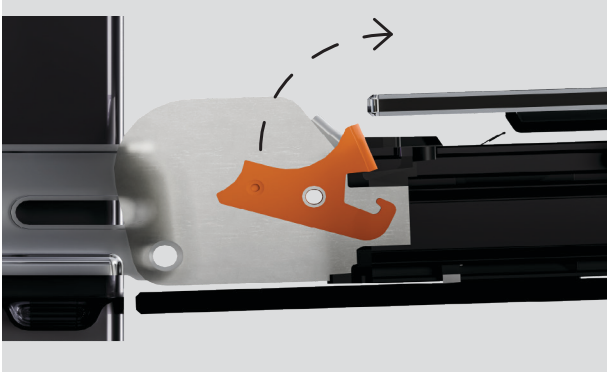

2. Locate the hinge locks on either side of the door.

Push the locks upwards to release.

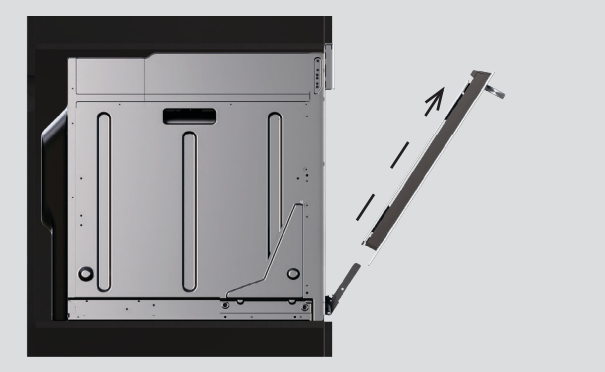

3. Holding the door on both sides, partially close the door and carefully pull the door away from the hinges.

Taking the door apart

The oven door is made up of multiple glass panes. The number of panes may vary depending on your model.

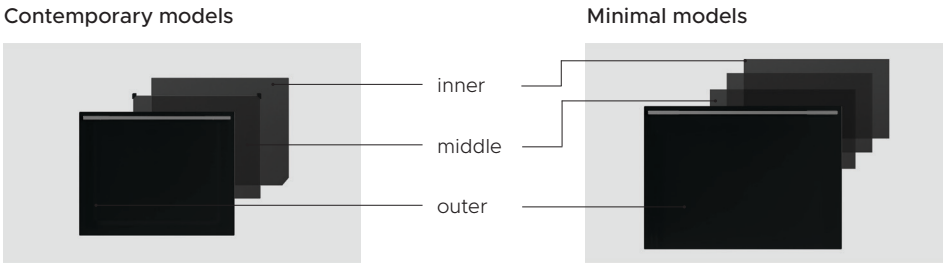

Before you begin

- Follow the instructions carefully. Refitting the glass incorrectly may result in damage to the oven and could void your warranty.
- Do not use the oven without all glass correctly in place.
- Take care when handling the glass. Avoid bumping the corners or edges against any surface. This may result in the glass shattering.
- Do not use oven cleaners or any other harsh/abrasive cleaners, cloths, scouring pads, steel wool or sharp metal scrapers to clean the glass surfaces. These scratch the glass and may damage the coating, which could result in the glass cracking or shattering.
- If you notice any sign of damage on any of the glass panes (such as chipping or cracks), do not use the oven. Contact a Fisher & Paykel trained and supported service technician or Customer Care.
- If the glass feels difficult to remove or replace, do not force it. Contact a Fisher & Paykel trained and supported service technician or Customer Care.

Series 9 and 11 models.

The oven door is made up of multiple glass panes. You can remove the inner pane for cleaning, but take care when handling the glass. It may shatter if you bump corners or edges.

- Do not force the glass if it feels difficult to remove or refit.
- Do not use the oven without all glass correctly in place.
- Do not use the oven if you notice damage, such as chips or cracks, on the glass.

Follow the instructions carefully. Refitting the glass incorrectly may damage the oven and void your warranty. Contact Customer Care for support if required.

1. Open the door fully. Using a suitable tool, gently rotate the tabs out on either side of the oven door.

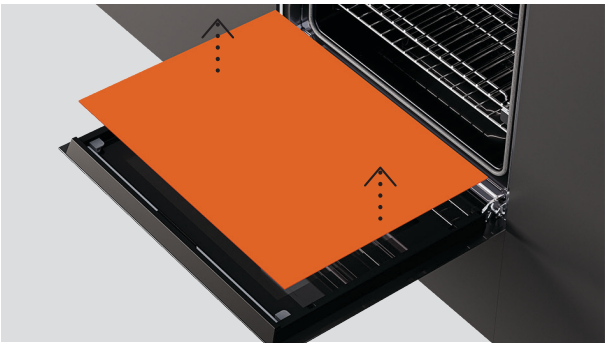

2. Pull the glass toward the top of the door to unhook. Lift the pane up to remove it, and place it on a flat, protected surface. Clean the glass as required. See 'Care and cleaning.'

3. To refit, make sure the glass is facing the correct way. The logo should be closest to the bottom of the door but orientated so you can read it.

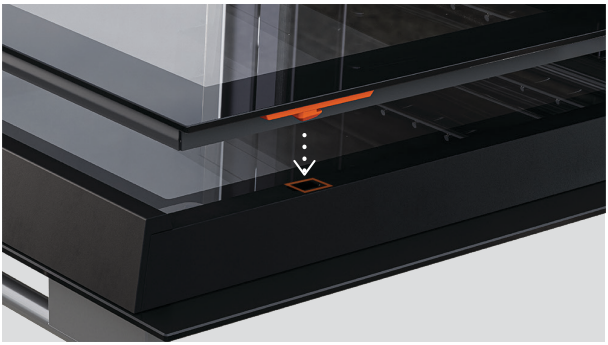

4. Lower the pane carefully onto the door to fit into the extrusions.

5. Close the tabs and gently press the glass. Close the door.

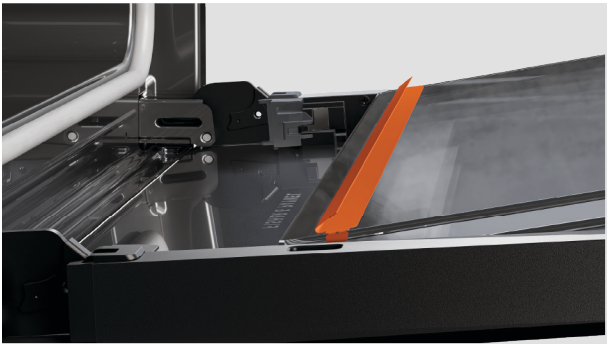

When replacing the second middle pane, ensure the metal bracket is still in place and correctly positioned at the bottom of the glass.

Series 7 models.

The oven door is made up of multiple glass panes. You can remove the inner pane for cleaning, but take care when handling the glass. It may shatter if you bump corners or edges.

- Do not force the glass if it feels difficult to remove or refit.
- Do not use the oven without all glass correctly in place.
- Do not use the oven if you notice damage, such as chips or cracks, on the glass.

Follow the instructions carefully. Refitting the glass incorrectly may damage the oven and void your warranty. Contact Customer Care for support if required.

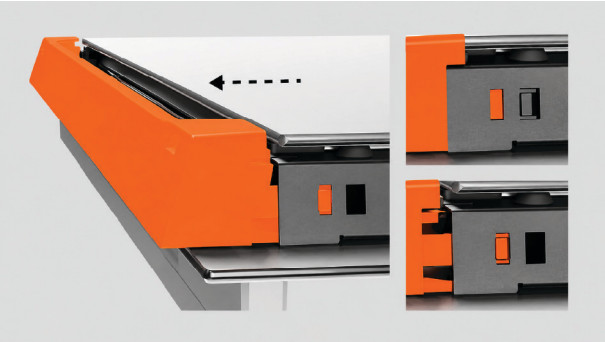

1. Push tabs in on both sides of the glass retainer. Pull the retainer up until the tabs relocate in the uppermost hole.

2. Pull the pane toward the top of the door until clear of the brackets, then lift out.

Do not angle the pane too much as this may damage the glass.

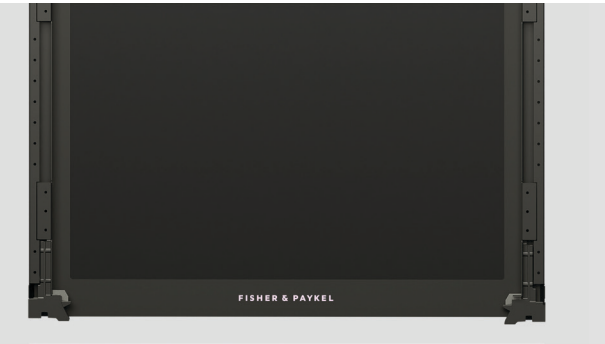

1. Ensure the glass is the right way up before refitting.

The logo should be readable at the bottom of the door.

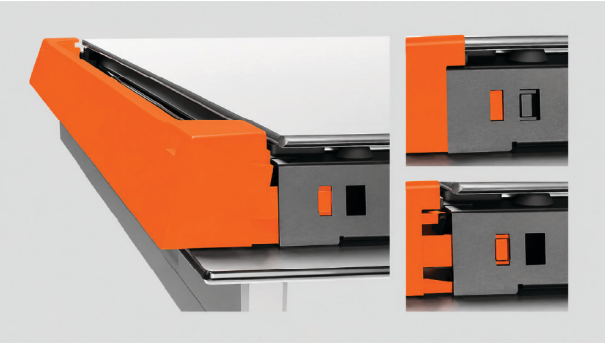

2. Slide the bottom of the pane into the upper brackets at the bottom of the door.

Lower the pane into place, resting on the brackets at the top of the door.

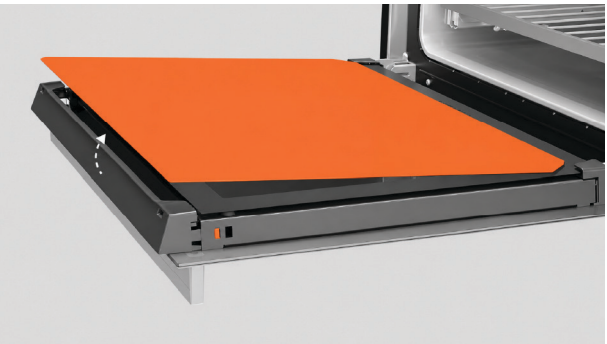

3. Replace the glass retainer, ensuring it clicks securely into place.

Series 7 models.

The oven door is made up of multiple glass panes. You can remove the inner pane for cleaning, but take care when handling the glass. It may shatter if you bump corners or edges.

- Do not force the glass if it feels difficult to remove or refit.
- Do not use the oven without all glass correctly in place.
- Do not use the oven if you notice damage, such as chips or cracks, on the glass.

Follow the instructions carefully. Refitting the glass incorrectly may damage the oven and void your warranty. Contact Customer Care for support if required.

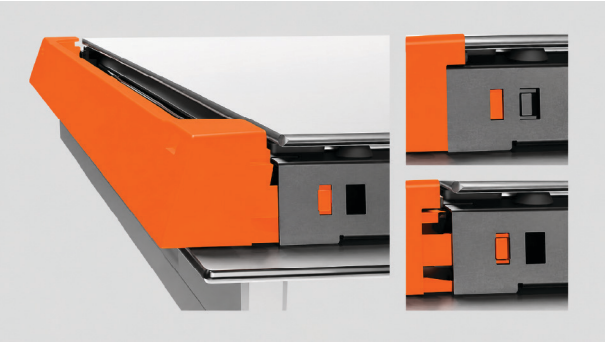

1. Push tabs in on both sides of the glass retainer again and remove the retainer.

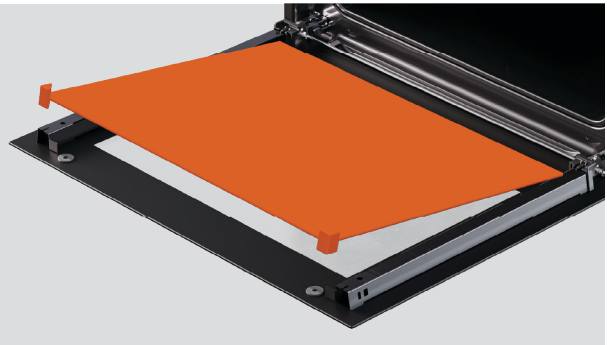

2. Pull the pane toward the top of the door until clear of the brackets, then lift out.

The rubber stoppers should remain attached to the glass.

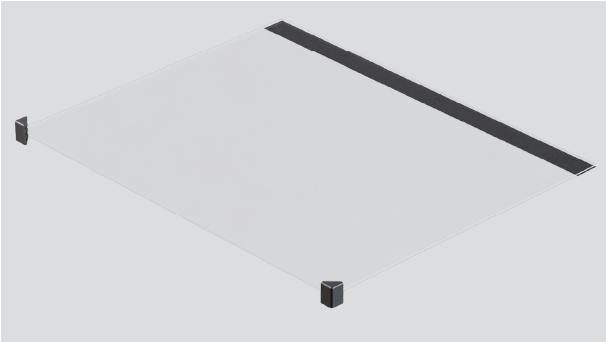

1. Ensure the glass is the right way up before refitting.

The warning text at the bottom of the glass should face towards the front of the door.

2. Ensure the rubber stoppers are attached to the glass and positioned correctly.

The longer side should be running down the side of the pane.

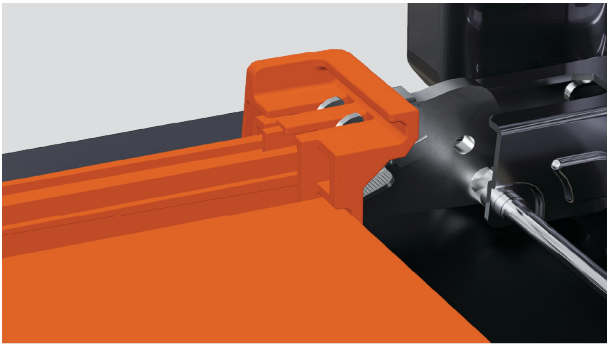

3. Slide the bottom of the glass into the lower brackets at the bottom of the door. Lower the glass into place, with the rubber stoppers resting on the outer pane of glass.

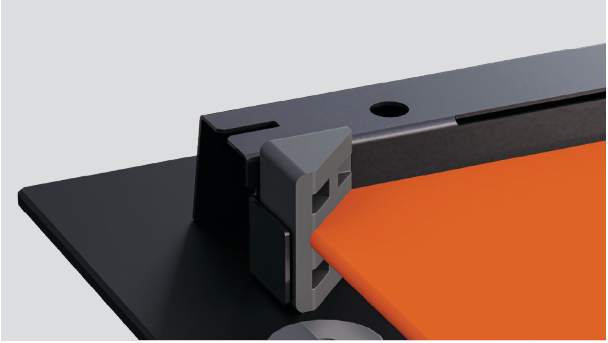

4. Lower the glass into place, with the rubber stoppers resting on the outer pane of glass.

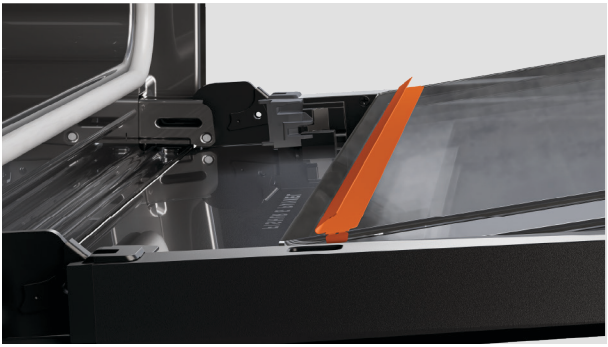

When replacing the second middle pane, ensure the metal bracket is still in place and correctly positioned at the bottom of the glass.

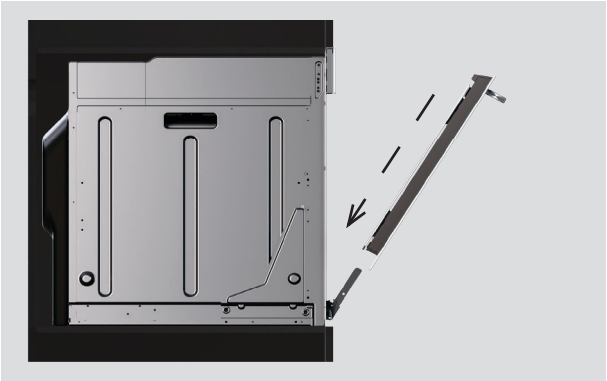

1. Holding the door on both sides, carefully lift door back onto the hinges.

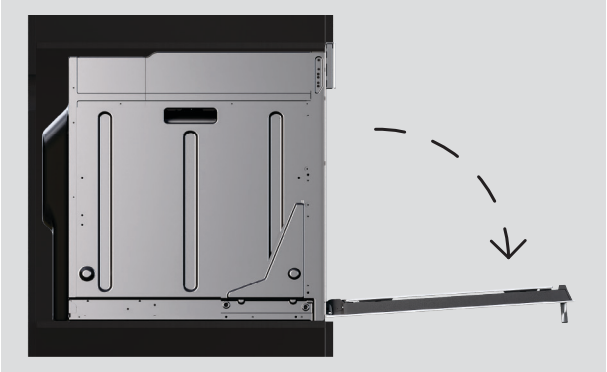

2. Open the door fully.

3. Push each locking lever down and lock into place.

Ensure both hinges are fully locked before closing the door.

REPLACE OVEN LIGHT

You can replace the oven light, but this is not covered by your warranty. Turn off the power supply to the oven before replacing the light.

The oven uses G9 220 - 240V/25W halogen light bulbs. Replacement bulbs are available via www.fisherpaykel.com.

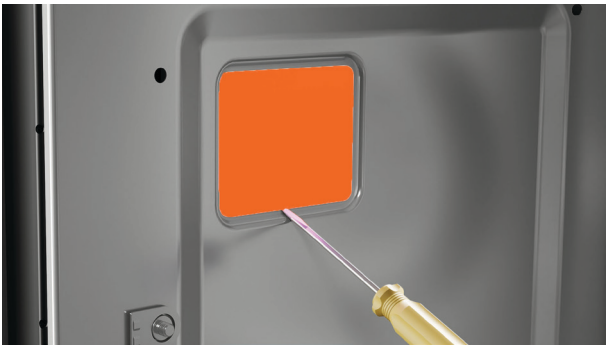

1. Remove all shelves and side ladders, then use a flathead screw driver to carefully prise off the glass light bulb cover.

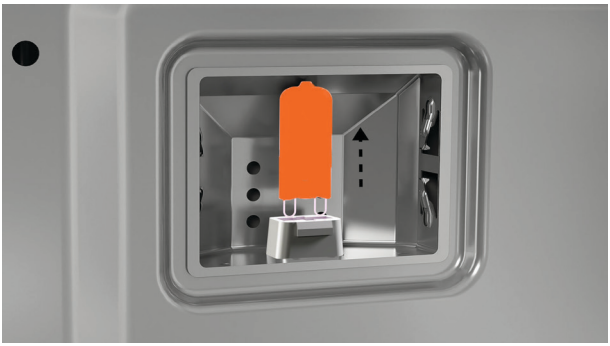

2. Remove the faulty bulb from the socket.

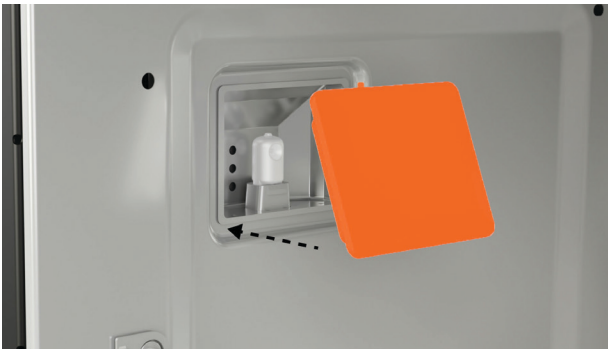

3. Hold the new bulb in a soft cloth to avoid touching it as this will reduce its lifespan.

Insert the bulb in the socket, then replace the cover.

General

Why will the product not turn on?

- No power. Make sure it is connected to the power supply and switched on at the wall.
- Check the circuit breaker, or check if there is a power cut in your home or area. If the product still won't turn on, call Customer Care or your Authorised Service Centre.

Why is the display not working?

- The controls may be locked. Press and hold the screen to unlock.

Why isn't the oven heating up?

- If the oven is heating but not reaching the set temperature, the door may not be closed or sealing properly.
- Ensure the door is closed properly and isn't being opened too often, or try removing and refitting the door. Refer to 'Remove the oven door' for instructions.
- If the display is working but the oven is not heating at all, it may be in Demo mode. Call Customer Care or your Authorised Service Centre.

Why is there a minimum temperature I can set?

- For food safety reasons, the oven has factory set minimum temperature settings depending on the function or method selected. Try selecting a different function or method that is designed for lower temperatures.

Why is the fan running while the oven is heating?

- The fan will run as part of the preheating stage to help the oven get up to temperature quickly. Depending on the function or method selected, the fan will turn off after the oven has heated.

Why aren't the lights turning on when I open the door?

- The light bulb(s) may have blown. Refer to 'Replace the oven light'.
- The door may not be closed or sealing properly. Ensure the door is closed properly and isn't being opened too often, or try removing and refitting the door. Refer to 'Remove the oven door' for instructions.

Why isn't the oven door straight?

- The oven door has been fitted incorrectly. Try removing and refitting the door. Refer to 'Remove the oven door' for instructions.

What do I do if the door glass is cracked, chipped or shattered?

- Do not use the oven. Contact a Fisher & Paykel trained and supported service technician or Customer Care.

Why can't I access the oven settings?

- The oven is on or set for automatic cooking and cannot be adjusted. Turn the oven off and on or wait for automatic cooking to finish.

Why is there hot air blowing out of the vents after the oven has turned off?

- The cooling fans will continue to run after the oven is turned off to ensure the oven cools properly. These will automatically turn off once the oven has cooled.

Why is there moisture building up in the oven during cooking?

- Steam and other cooking methods generate moisture. Wait for the oven to cool, then wipe it dry.

Why is the drip tray overflowing?

- The drip tray needs to be cleaned or emptied. Wait for the oven to cool then wipe with a sponge or soft cloth, or lift up to remove and empty.

Why is there a burnt smell coming from the oven?

- There may be food burnt onto the oven base. We recommend placing a solid tray below the perforated dish to prevent drips, and cleaning up any spills as soon as they happen.

Why is the oven so loud during a SELF CLEAN cycle?

- This is normal. The oven's cooling fans operate at their highest speed in the cooling phase of a pyrolytic self-cleaning cycle.

Why can't I open the door or use the controls when SELF CLEAN is cancelled or ended?

This is normal. The door will unlock when the oven has cooled down.

If there is a fault with your oven, it will beep and display an alert.

What to do

Follow the onscreen instructions or the steps in the following table to try and fix the issue and clear the alert.

Do not turn the oven off at the wall unless it is completely cool. Turning off the power while the oven is hot may damage the oven and its surrounding cabinetry.

FAULT CODE	POSSIBLE CAUSE	WHAT TO DO
A1	The oven has overheated.	• Allow the oven to cool down. • Once the oven has cooled down and the door has unlocked, the alert code will disappear. You can now use the oven.
A2	Door lock error. The door cannot be locked after you start Self clean.	• Turn the oven off and on at the power supply. • Wait 10 seconds for lock to return to its initial position. • Ensure door is closed, then restart Self clean cycle.
A3	Door lock error. The door cannot be unlocked at the end of Self Clean.	• Turn the oven off and on at the power supply. • Press the door a few times to help the lock disengage.
F + number	Technical fault.	• Note down the alert code. • Wait until the cooling fans have stopped and the oven has completely cooled down. • Turn the power to the oven off at the wall. • Contact a Fisher & Paykel trained and supported service technician or Customer Care.

If the fault code disappears, you can continue to use your oven.

If the problem persists, note the fault code and contact Customer Care.

FISHERPAYKEL.COM

© Fisher & Paykel Appliances 2026. All rights reserved.

The models shown in this guide may not be available in all markets and are subject to change at any time.

The product specifications in this guide apply to the specific products and models described at the date of issue. Under our policy of continuous product improvement, these specifications may change at any time.

For current details about model and specification availability in your country, please go to our website or contact your local Fisher & Paykel dealer.

433827A 06.26