Dishwasher

User Manual

BDIN25431,BDIN25430

16 5179 0100/ EN/ AA/ 10.06.2026 17:07
7671593877,7671493877

Please read this user manual first!

Dear customer,

Thank you for choosing Beko. We want you to get the best results from your high-quality, high-tech product. To ensure this, please read this entire manual and the other documentation provided carefully before using the product.

Please follow all the warnings and information in the user manual to protect yourself and your product from potential dangers.

Keep the user manual. If you give the product to someone else, give the user manual along with it. The warranty terms, usage and troubleshooting methods for your product are included in the manual.

Description of the Symbols

The following symbols appear in the user manual:

	Hazard that could result in death or injury.
	Important information or useful tips for use.
	Read the user manual.
NOTICE	Hazard that may result in material damage to the product or its surroundings.

Contents

1 Safety Instructions 5

1.1 Intended Use 5
1.2 Child, vulnerable person and pet safety 5
1.3 Electrical safety 6
1.4 Transportation Safety 7
1.5 Installation Safety 7
1.6 Operation Safety 8
1.7 Maintenance and Cleaning Safety 9

2 Environmental Instructions 9

2.1 Compliance with WEEE Regulation and Disposal of Waste Products 9
2.2 Package Information 10
2.3 Compliance with WEEE Directive and Disposing of the Waste Product 10
2.4 Note for Test Institutes 10
2.5 Standard conformity and test information / EC declaration of conformity 10
2.6 This section applies for products with Wifi feature. 10
2.7 Energy Label 11
2.8 Comformity Declaration for UKCA 11

3 Technical Specifications 12

4 General View 13

5 Installation 13

5.1 Correct location for installation 14
5.2 Connecting to the water supply 14
5.3 Connecting to the water drain 15
5.4 Adjusting the feet 15
5.5 Electricity connection 15
5.6 Fitting a Different Plug 15

6 Preliminary 16

6.1 What to do to save energy 16
6.2 Water softening system 16
6.3 Adjusting the water softener system test strip 17
6.4 Setting the Water Softening System 17
6.5 Filling the salt 18
6.6 Detergent 19
6.7 Polisher 22
6.8 Parts that are not suitable for washing in the dishwasher 23
6.9 Placing the dishes in the machine 23
6.10 Lower Propeller 24
6.11 Upper Propeller 24
6.12 Cutlery basket 24
6.13 Cutlery basket 25
6.14 Lower basket multi-purpose / height adjustable service shelf 25
6.15 Height Adjustable Upper Basket Shelf 26
6.16 Bottom basket bottle wire 27
6.17 Upper basket multi-purpose service shelf 27
6.18 Upper basket multi-purpose service shelf 27
6.19 Adjusting the height of the upper basket 28
6.20 Adjusting the height of the upper basket 29
6.21 Adjusting the height of the upper basket 30
6.22 Lower Basket Bottle and Plate Holder Part 30
6.23 Foldable upper basket wires 30
6.24 Ceiling cutlery basket 31
6.25 Ceiling cutlery basket 31

7 Operating the product 32

7.1 Table of Program Information and Average Consumption Values 33
7.2 Additional functions 34
7.3 Functions 35
7.4 Changing the Warning Tone Level 36
7.5 Programming the Washing Period 37
7.6 Starting of the programme 37
7.7 Cancelling the Cycle 37
7.8 Low Salt Warning indicator 37
7.9 Low Rinse Aid Warning indicator .. 38
7.10 End of programme 38

8 Maintenance and Cleaning 38

8.1 Maintenance and cleaning 38
8.2 Cleaning the filters 39
8.3 Cleaning the hose filter 39
8.4 Cleaning the propellers 40

9 Troubleshooting 42

9.1 Error Codes, Causes, and Solutions..... 42
9.2 Troubleshooting 42
10 DISCLAIMER / WARNING 46
11 HOW TO OBTAIN SERVICE FOR YOUR APPLIANCE..... 47
12 BEKO UK AND ROI STANDARD MANUFACTURER GUARANTEE TERMS AND CONDITIONS..... 48

1 Safety Instructions

This section contains safety instructions that will help protect from risk of personal injury or property damage.

Our company shall not be held responsible for any damages that may arise in case of non-compliance with these instructions.

- Installation and repair procedures must always be performed by Authorised Service Agents.
- Use only original spare parts and accessories.
- Do not repair or replace any component of the product unless it is clearly specified in the user manual.
- Do not make technical modifications to the product.

1.1 Intended Use

This product is intended for use in homes and in the following types of enclosed spaces: For example;

- Staff kitchens of shops, offices and other working environments;
- Farm houses;
- Areas for the use of guests of hotels, motels and other accommodation facilities;
- Places serving bed and breakfast, hostel-like environments.
- The product should only be used for household dish washing.

- The product is not suitable for commercial or public use.
- The lifetime of the product you have purchased is 10 years. This is the period for which the spare parts required for the operation of this product as defined.
- This product is intended for use in the home and under counter.

1.2 Child, vulnerable person and pet safety

- 8 years and older children and people with reduced physical, sensory, and mental abilities as well as unskilled or inexperienced persons can use this appliance provided that they are supervised and instructed on safe use of the appliance as well as to the related dangers.
- Children under 3 years of age should be kept away from the product unless constantly supervised.
- Children should not play with the appliance.

- Electrical products are dangerous for children and pets. Children and pets must not play with, climb on or enter into the product.
- Remember to close the door of the product when leaving the room where the product is located. Children and pets can be locked inside the product and suffocate.
- Cleaning and user maintenance must not be made by children without supervision.
- Keep the packing materials away from the children. Risk of injury and suffocation.
- Keep all detergents and additives used in the product out of the reach of children.
- For the safety of children, disconnect the power plug and break the locking mechanism before disposing of the product.

⚠ 1.3 Electrical safety

- The product must not be plugged in during installation, maintenance, cleaning, repair and transport.
- If the power cord is damaged, it must be replaced by an authorised service centre to prevent possible hazards.
- Do not pinch the power cord under or behind the product. Do not place a heavy object on the power cord. The power cord must not be excessively bent or crushed, and must not come into contact with any heat source.
- Do not use an extension cord, multiple power outlets, or adapters to operate the product.
- Portable multiple power outlets or portable power supplies can overheat and cause a fire. Therefore, do not keep multiple power outlets behind and near the product.
- The plug must be within easy reach. If this is not possible, the electrical installation to which the product is connected must be equipped with a device (fuse, switch, circuit breaker, etc.) that complies with electrical regulations and disconnects all poles from the mains.
- Do not touch the plug with wet hands.
- When removing the plug from the socket, pull it by the plug, not by the cable.

1.4 Transportation Safety

- Before transporting the product, unplug the plug and disconnect the drain and water supply connections. Drain the water remaining inside the product completely.
- Do not carry the product alone as it is heavy.

NOTICE Do not hold the door or panel to move the product.

NOTICE If you have to move the product, move it in an upright position and hold it by the back. Tilting the product towards the front may cause the electronic parts inside to get wet and damaged.

NOTICE When putting the product in place after installation or cleaning, take care not to fold, pinch or break the hoses.

1.5 Installation Safety

- To make the product ready for use, check the information in the manual and installation instructions to make sure that the electrical installation, clean water installation and drainage are appropriate. Otherwise, call a qualified electrician and plumber to make the necessary arrangements. These processes are at the customer's expense.
- Before installing the product, inspect the product for any damage. Do not install the product if it is damaged.
- Do not install the product in places where the temperature drops below 0 °C.
- Do not place the product on a carpet or similar surface. It causes fire risk since it cannot get air from the bottom.
- Place the product on a clean, flat and hard floor and balance it with the help of adjustable feet. If the feet are not adjusted properly, the door may not close completely and hot vapour may escape. It may cause serious burns and injuries and may also damage your furniture.
- Do not install the product near heat sources (radiators, stoves, etc.) and do not install it under the cooking area of a hob.
- If the product is intended to be used in a cupboard/cabinet/module, keep the cupboard doors open during operation if there are no gaps to ensure sufficient air circulation.

- Connect the product to an earth-grounded socket protected by a fuse rated in accordance with the current ratings indicated on the rating plate. Have the earthing installation done by a qualified electrician. Do not use the product without earthing in accordance with local/national regulations.
- Plug the product into an outlet complying with the voltage and frequency values indicated on the rating plate.
- Do not plug the product into sockets that are loose, out of the socket, broken, dirty, greasy, at risk of contact with water (e.g. water that may leak from the workbench).

NOTICE The new hose sets supplied with the product must be used. Do not reuse old hose assemblies. Do not splice the hoses.

NOTICE Connect the water inlet hose directly to the water tap. The pressure supplied from the tap must be at least 0.05 MPa (0.5 bar) and no more than 1 MPa (10 bar). If the water pressure exceeds 1 MPa (10 Bar), a pressure reducing valve must be installed. Maximum allowable water temperature is 25°C.

- Position the power cable and hoses so that there is no risk of tripping.

1.6 Operation Safety

Only detergents, rinse agents and additives intended for dishwashers should be used.

Never use chemical solvents in the product. These substances pose a risk of explosion.

Do not drink the wash water in your product.

Dishwasher detergents contain strong alkali, which can be extremely dangerous if swallowed. Avoid contact with skin and eyes and do not allow children near the product when the lid is open. Check that the detergent tank is empty after the wash cycle is completed.

When you pull out the upper and lower baskets completely, the door of the product takes the entire load of the baskets. Do not sit or place other loads on the door, otherwise the product may tip over.

Product's Maximum Washing capacity: Indicated on the Energy Label and Quick Use Card under Cycle Table.

To avoid possible injury, always place long and pointed dishes such as serving forks, bread

knives, etc. in the cutlery basket with the pointed end downwards or horizontally on the dishwashing baskets.
If you need to open the door while the product is running, open it carefully. Be careful of hot steam and splashes of hot water.
The door must not be left open as this carries tripping hazard risk.
Do not operate a faulty or damaged product. Unplug the product (or switch off the fuse to which it is connected), turn off the water tap and call for authorised service.
Do not place a flame source (burning candle, cigarette, etc.) on or near the product. Do not place flammable/explosive materials near the product.
Do not climb on the product.
Unplug the product and switch off the tap when you will not use the product for a long time.

This product is designed to operate up to 2000 m. above sea level.

1.7 Maintenance and Cleaning Safety

Do not wash the product by spraying or pouring water on it.

Do not use sharp or abrasive tools to clean the product. Do not use materials such as household cleaning agents, detergents, gas, gasoline, alcohol, wax, etc.

Wear gloves worn when cleaning the product.

Be careful of possible injuries when cleaning sharp surfaces on the back of the product!

NOTICE! Remember to install the filter of your machine back after cleaning it. Otherwise, the pumps may get clogged and the product may get damaged.

Interior Lighting

Contact a service when you need to replace the LED/bulb used for lighting according to the model of your machine.

2 Environmental Instructions

Frequency Band : 2.400-2.484 Ghz
Max. Transmission Power : < 100mWConformity declaration for UKCA
Beko hereby declares that this appliance complies with The Radio Equipment Regulations 2017.
The complete text of the UK declaration of conformity is available in the following internet address:
support.beko.com

2.1 Compliance with WEEE Regulation and Disposal of Waste Products

This product does not contain harmful and prohibited substances specified in the "Regulation on the Control of Waste Electrical and Electronic Equipment" published by the Ministry of Environment and Urbanisation of the Republic of Turkey. It complies with WEEE Regulation.

This product is manufactured from high quality parts and materials that are recyclable and reusable. Therefore, do not dispose of the product with household or other waste at the end of its service life. Take it to a collection point for recycling electrical and electronic equipment. Ask the local authority in your area for these collection points. Help protect the environment and natural resources by recycling used products. Before disposing of the product, disconnect the power plug for the safety of children and break the locking mechanism of the loading door to render it inoperable.

2.2 Package Information

The packaging of the product is made of recyclable materials in accordance with our National Legislation. Do not dispose of packaging waste with household or other waste, dispose of it at the packaging collection points specified by the local authorities.

2.3 Compliance with WEEE Directive and Disposing of the Waste Product

This product complies with EU WEEE Directive (2012/19/EU). This product bears a classification symbol for waste electrical and electronic equipment (WEEE).
This symbol indicates that this product shall not be disposed with other household wastes at the end of its service life. Used device must be returned to official collection point for recycling of electrical and electronic devices. To find these collection systems please contact to your local authorities or retailer where the product was purchased. Each household performs important role in recovering and recycling of old appliance. Appropriate disposal of used appliance helps prevent potential negative consequences for the environment and human health.

Compliance with RoHS Directive:
The product you have purchased complies with EU RoHS Directive (2011/65/EU). It does not contain harmful and prohibited materials specified in the Directive.

2.4 Note for Test Institutes

The information required for performance tests is available on request.
You can send your request via the e-mail address below:
dishwasher@standardloading.com

In your enquiry e-mail, be sure to include your contact details as well as the code, stock number and serial number of the product to be tested. The product code, stock number and serial number can be found on the type label attached to the side of the door

2.5 Standard conformity and test information / EC declaration of conformity

The development, production and sale of this product are carried out in accordance with the safety regulations of all relevant directives of the European Community.
2014/35/EU, 2014/30/EU, 93/68/EC, IEC 60436 / EN 60436

2.6 This section applies for products with Wifi feature.

Frequency Band 2.4Ghz
Max. Conduction Power : < 100mW
Declaration of conformity for CE BEKO A.Ş. hereby declares that this appliance complies with Directive 2014/53/EU.
The full text of EU Conformity Declaration is on the web site:
Products, address

support.beko.com

2.7 Energy Label

You can access technical information about the product by scanning the QR code on the energy label with a mobile device connected to the internet.

2.8 Comformity Declaration for UKCA

Frequency Band : 2.400-2.484 Ghz
Max. Transmission Power : < 100mW
ARÇELİK hereby declares that this appliance complies with The Radio Equipment Regulations 2017. The complete text of the UK declaration of conformity is available in the following internet address: support.beko.com

3 Technical Specifications

Maximum washing capacity: Indicated on the Energy Label and Quick Use Card under Cycle Table.
Height: See the installation manual for the height.
Width: 60
Depth:55-60
Electricity input:220-240 V, 50 Hz
Total power:1800-2100 W
Heater power:1800 W
Total current: 10 A *
Pump power:90 W
Drain pump power: 30 W *
* For detailed electrical values see the type label on the dishwasher's door.
Water Pressure 0.5 -10 bar (= 3 – 100 N/cm² = 0.05-1.0 Mpa)

Technical specifications may be amended without prior notice to improve product quality.

The figures in the manual are schematic and may not be in exact harmony with the product.

The values provided with the appliance or its accompanying documents are laboratory readings in accordance with the respective standards. These values may differ depending on the use and ambient conditions.

4 General View

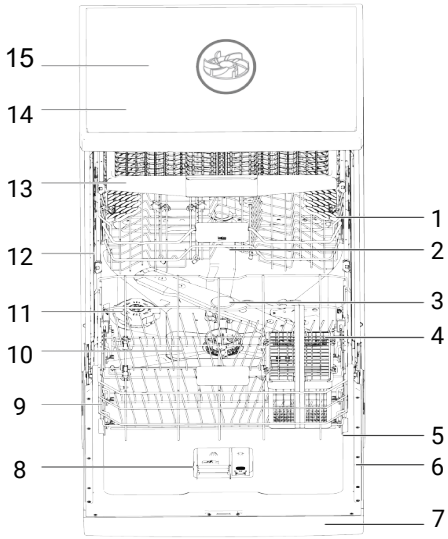

1 Upper Basket
2 Upper Spray Arm
3 Lower Spray Arm
4 Cutlery Basket (depends on model)
5 Door
6 Type Label
7 Control Panel
8 Detergent Zone
9 Lower Basket
10 Filters
11 Salt Compartment Cover
12 Upper Basket Rail
13 Ceiling Cutlery Basket (depends on model)
14 Top Plate (depends on model)
15 Ceiling Fan (depends on model)

Type label varies depends on model

Illustration 1:

5 Installation

Read the ‘Safety Instructions’ section first!

The preparation of the electrical, clean water and waste water installation of the place where the product will be placed is under the responsibility of the customer. Before calling the authorised service to make the product ready for use, if the electrical installation, clean water installation and water drainage are not suitable, call a qualified electrician and plumber to make the necessary arrangements.

Installation and electrical connections must be carried out by the authorised service. The manufacturer cannot be held responsible for any damages that may arise from the operations performed by unauthorised persons.

Before installing the product, inspect the product for any damage. Do not install the product if it is damaged. Damaged products pose a danger to your safety.

For free-standing and under-counter models, do not remove the kick plate of the appliance. This will void the warranty.

- When placing the product in place after installation or cleaning, make sure that the water inlet and drain hoses are not folded, pinched or broken.
- Be careful not to damage the floor, wall, pipes, etc. when placing the product. Do not hold the door or panel to move the product.

5.1 Correct location for installation

- There must not be any lockable, sliding or hinged doors in the place where the product is installed, which would restrict the full opening of the door.
- Place the product on a solid and level surface with sufficient load-bearing capacity! Placing the dishwasher on a level surface is essential for the door to close properly and tightly.
- Do not install the product in places where the temperature drops below 0 ºC.
- Place the product on a hard floor. Do not place it on a long-pile carpet or similar surface.
- Choose a place where you can load and unload the dishes easily and quickly.
- Place the product close to the tap and drain. Choose the location of the product in such a way that you do not change it after it has been connected.

Do not place the product on the power cable. The cable may be damaged, causing a risk of electric shock or fire.

5.2 Connecting to the water supply

To prevent dirt (sand, clay, rust, etc.) from the city network or your water supply system from damaging the dishwasher and your dishes, we recommend installing a filter on the water inlet.

Maximum allowable water inlet temperature:

- With AquaSafe+ feature containing models, it is 60 °C.
- Up to 25 °C for other models.

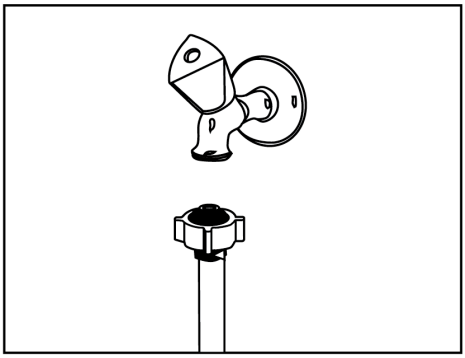

The dishwasher must not be connected to warm water appliances or running water heaters.

NOTICE Do not use an old or used water inlet hose on a new product. Use the new water inlet hose supplied with the dishwasher. Do not splice the hoses.
NOTICE Connect the water inlet hose directly to the water tap. The pressure supplied from the tap must be at least 0.3 and no more than 10 bar. If the water pressure exceeds 10 Bar, a pressure reducing valve must be installed.
NOTICE The water supply and drain hose must be securely fastened and undamaged.
NOTE After making the connections, open the tap fully and check for water leaks.

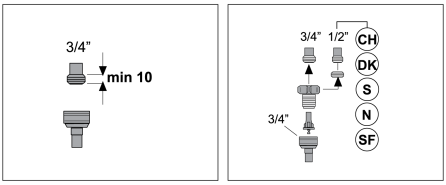

5.3 Connecting to the water drain

The water drain hose can be connected directly to the waste water drain or to the drain of the sink. For more detailed information, refer to the installation instructions supplied with your dishwasher.

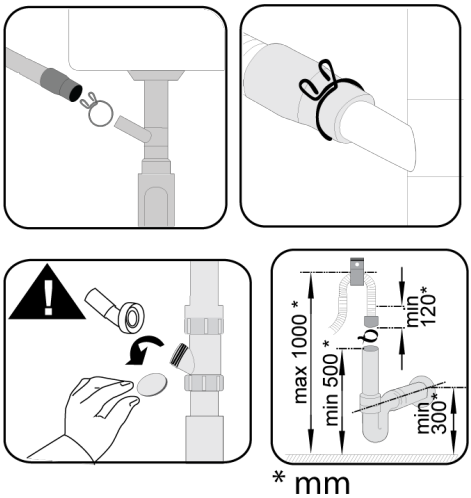

The waste water drain must be connected to the sewer and must not be connected to surface water.

5.4 Adjusting the feet

If the door of the product does not close properly or shakes when you push it gently with your hand, this means that the feet are not adjusted. Adjust the feet of the product as shown in the installation manual supplied with the product.

Hot steam may escape if the dishwasher door is not adjusted properly. Serious burns can cause injury and damage your furniture.

5.5 Electricity connection

Connect the product to a grounded socket protected by a fuse in accordance with the values in the "Technical specifications" table. Our company shall not be responsible for any damages that may occur if the product is used without grounding in accordance with local regulations.

- The connection must comply with national regulations.
- The plug of the power cord must be easily accessible following the installation.
- Connect the product to a grounded socket protected by a 16 ampere fuse.
- The specified voltage must be equivalent to your mains voltage.

Do not connect with extension cords or multiple sockets.

A damaged power cord must be replaced by authorised service.

5.6 Fitting a Different Plug

As the colours of the wires in the mains lead of this appliance may not correspond with the coloured markings identifying the terminals on your plug, proceed as follows:

1.Connect the green - yellow or green (earth) wire to the terminal in the plug marked ‘E’ or with the symbol or coloured green and yellow or green.

2.Connect the blue (neutral) wire to the terminal in the plug marked ‘N’ or coloured black.
3.Connect the brown (live) wire to the terminal in the plug marked ‘L’ or coloured red.

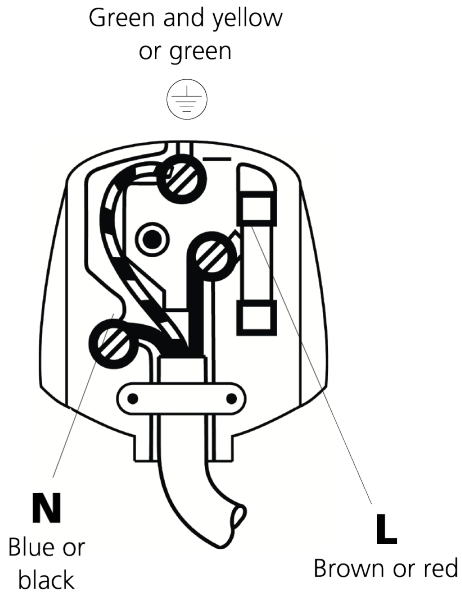

With the alternative plugs a 13A fuse must be fitted either in the plug or adaptor or in the main fuse box. If in doubt contact a qualified electrician.

6 Preliminary

Read the “Safety Instructions” section first!

6.1 What to do to save energy

The following information will help you use the product in an ecological and energy-saving way.
Clean all the coarse waste on the dishes before placing them in the machine.

It is not recommended to pre-clean the dishes before loading them into the machine as this will cause energy and water consumption.

Washing dishes with a dishwasher consumes less energy and water than washing them by hand.

After the machine is fully filled, start it.

When choosing a program, pay attention to the “Program Information and Average Consumption Values Table”.
Do not use more detergent than recommended on the detergent packaging.

6.2 Water softening system

The machine has a special water softening system that reduces the hardness of the mains water. This system softens the water to the required level to wash the dishes to the desired quality.

If the tap water hardness is over 7°dH, it should be softened. Otherwise, hardness ions will accumulate on the washed items and may affect the washing, polishing and drying performance of the machine.

Adjusting the water softener system

When the water softening system is adjusted correctly, washing efficiency will increase.

Read the section on adjusting the water softener system first.

The regeneration of the water softening system can be carried out in all programs during the drying step. When the regeneration process is performed, the duration, energy and water consumption of the program increase. For the regeneration process; when the dishwasher is operated with a water supply of 14 dH under standard conditions in the Eco 50°C program, the frequency of the regeneration process, maximum additional time, water and energy consumption depending on the water consumption of the Eco 50°C program are given in the table below.

Eco 50°C water consumption (l)	…. cycle then renewal	Additional time (min)	Additional water consumption (l)	Additional energy consumption (kWh)
12.3-14.7	5	5	3.0	0.05
9.6-12.2	6	5	3.0	0.05
9.0-9.5	7	5	3.0	0.05
8.0-9.0	8	5	3.0	0.05
7.0-7.9	9	5	3.0	0.05

For water consumption in the Eco 50°C program of your dishwasher, please refer to the Program Information and Average Consumption Values Table given in the Program Table.

6.3 Adjusting the water softener system test strip

When the water softening system is adjusted correctly, the washing, rinsing and drying performance of your dishwasher will increase.

To adjust the system, first find out the water hardness in your area and adjust as indicated below.

- Remove the test strip from its packaging.
- Turn on the tap and let the water run for about 1 minute.
- Dip the test strip in water for 1 second.
- Remove the strip from the water and shake it. Wait 1 minute.
- Make the necessary adjustments based on the test strip.

6.4 Setting the Water Softening System

Setting the water softening system correctly will improve your dishwasher's washing, rinsing, and drying performance.

NOTICE! To set the system, first find out your water hardness level from the authorised service in your region and set it as follows.

After determining the water hardness:

1.Press the Delay and P keys simultaneously after turning your dishwasher on. Keep the keys pressed for a while after observing the 3,2,1 count down on the screen.

2. Press P key to activate the (r) position.

3. Set the water hardness to a proper level for the hardness of your mains water with the Delay key. For the correct setting, refer to the "Water hardness level setting table".

4. Save by pressing On / Off key.

Hardness Level	English Hardness °dE	German Hardness °dH	French Hardness °dF	Water Hardness Level Indicator
0. Level	0-5	0-4	0-8	Bring the water hardness setting to position 1 by pressing the Select key. (r1)
1. Level	6-9	5-7	9-13	Bring the water hardness setting to position 1 by pressing the Select key. (r1)
2. Level	10-15	8-12	14-22	Bring the water hardness setting to position 2 by pressing the Select key. (r2)
3. Level	16-19	13-15	23-27	Bring the water hardness setting to position 3 by pressing the Select key. (r3)
4. Level	20-24	16-19	28-34	Bring the water hardness setting to position 4 by pressing the Select key. (r4)
5. Level	25-62	20-50	35-90	Bring the water hardness setting to position 5 by pressing the Select key. (r5)

Table 1: Water Hardness Level Setting Table

- If the hardness of the water you use is above 50°dH (French hardness) or if you use well water, it is recommended to use filters and water purifiers.
- If the hardness of the water you use is below 7°dH, you do not need to use salt in your dishwasher. In this case, the "Low Salt Indicator Light" on your dishwasher control panel will be on continuously.
- If your water hardness setting is at level 1, the "Low Salt Indicator Light" will remain on continuously even though you do not need to use salt. If you do add salt in this position, the salt will not be consumed and the lamp will not come on.

In case of relocation, you need to adjust the water hardness setting of your dishwasher again according to the water hardness of the place you move to, taking into account the information given above. If the water hardness setting of your dishwasher has been adjusted before, the last water hardness setting will be displayed on the screen of your dishwasher.

6.5 Filling the salt

In order for the machine to operate at the same performance continuously, the water softening system needs to be renewed. Dishwasher salt is used for this purpose.

Use only special softening salt produced for use in dishwashers.

It is recommended to use granulated or powdered softening salts in the water softening system. Do not use table salt, rock salt, etc. that do not fully dissolve in water. Otherwise, the performance of the system may deteriorate over time.

The salt compartment fills with water when you turn the machine on, so fill the salt compartment before starting the machine.

1. To add softening salt, first remove the lower basket.
2. Open the salt compartment cover by turning it counterclockwise (A).

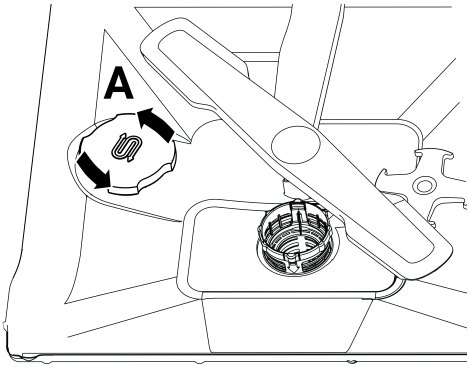

3. Add 1 litre of water to the salt compartment only when using your machine for the first time.
4. Fill the salt container with salt (D). Stir with a spoon to speed up the dissolution of the salt in the water.

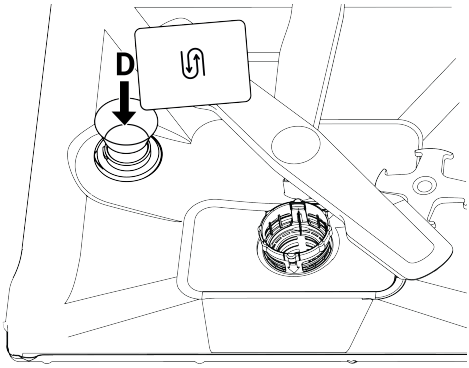

You can put about 2 kg of softening salt into the salt compartment.

5. Once the compartment is full, replace the cap and turn it.

Salt should be added just before starting the machine. In this way, the overflowing salt water is cleaned immediately and the risk of corrosion inside the machine is prevented. If you are not going to wash immediately, run your machine empty and without detergent in the shortest program.

Depending on the different brands of salt in the market and the water hardness, it may take several hours for the salt to dissolve in water. Therefore, after the salt is filled into the machine, the “Salt Deficiency Warning Indicator” will continue to light for a certain period of time.

6.6 Detergent

You can use powder, liquid/gel and tablet detergent in the dishwasher.

Use only detergents designed for use in dishwashers. We recommend that you do not use detergents containing chlorine or phosphates, as they are harmful to the environment.

- Do not use expired detergents.
- Do not use other cleaning materials other than powder/liquid or tablet detergent types.

Filling the detergent

To obtain good washing and drying results, pay attention to the warnings given on the detergent packaging. For additional questions, please contact the detergent manufacturer.

Do not put solvents in the detergent compartment. There is a risk of explosion!

Put the detergent into the detergent compartment just before starting the machine as follows.

1. Open the detergent compartment cover by pushing the latch to the right (A). (depends on model)

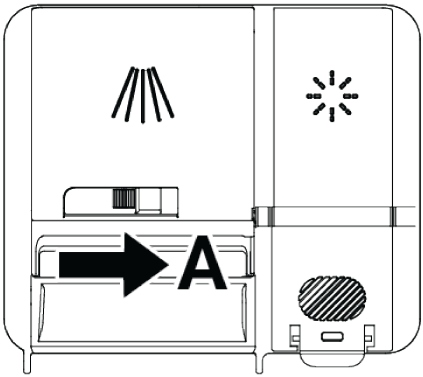

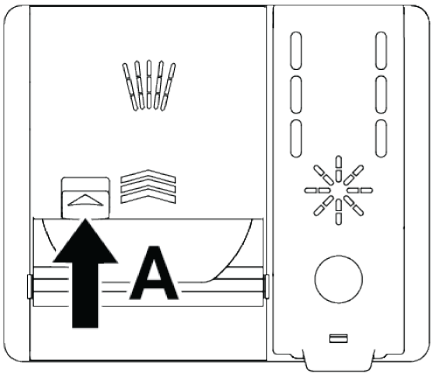

2. Put the specified amount of powder, liquid/gel or tablet detergent into the compartment.

There are level lines inside the detergent compartment to help you use the right amount of powder detergent. When the detergent compartment is full, it takes 45 cm³ of detergent. Depending on the filling level of the machine and / or the dirtiness of your dishes, fill the detergent compartment up to the 15 cm³ or 25 cm³ level lines. In case of tablet detergent, one tablet is sufficient.

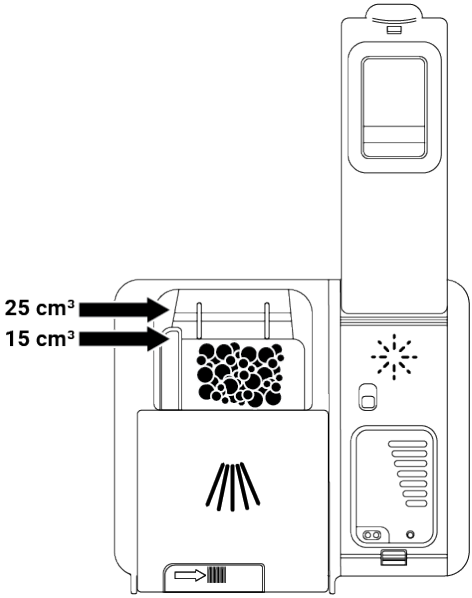

3. Close the detergent compartment cover by pushing it in the direction of the arrow. A “click” sound will be heard when the cover is closed.

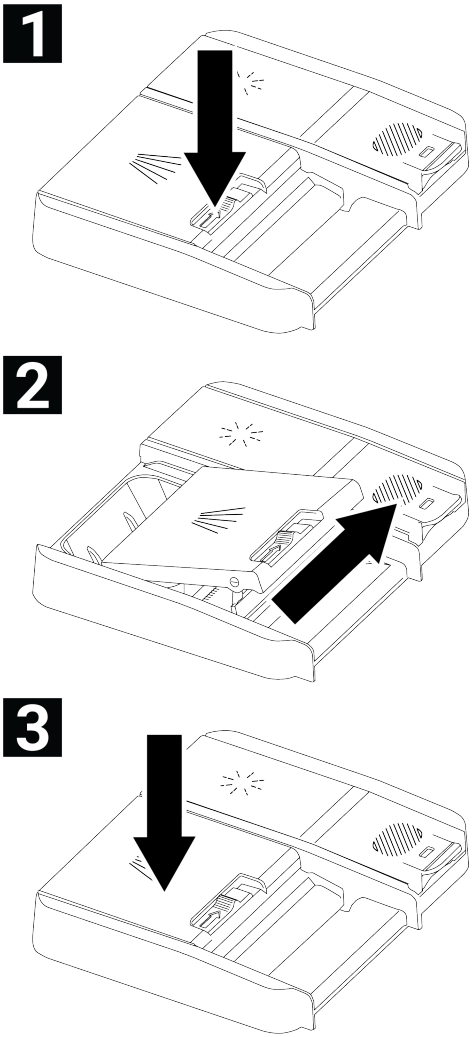

Since the solubility of tablet detergents varies depending on temperature and time, be sure to use powder or liquid/gel detergent in short programmes without pre-washing.

Tablet Detergents

In addition to classic tablet detergents, there are also tablet detergents on the market that contain water softening salt and/or rinse aid. Some also contain special components such as glass protector and stainless steel protector. These tablets work up to a certain water hardness level (21°dH). Above this level, water softening salt and rinse aid should be used together with the tablet detergent.

The best washing performance in dishwashers is achieved by using detergent, rinse aid and water softening salt separately.

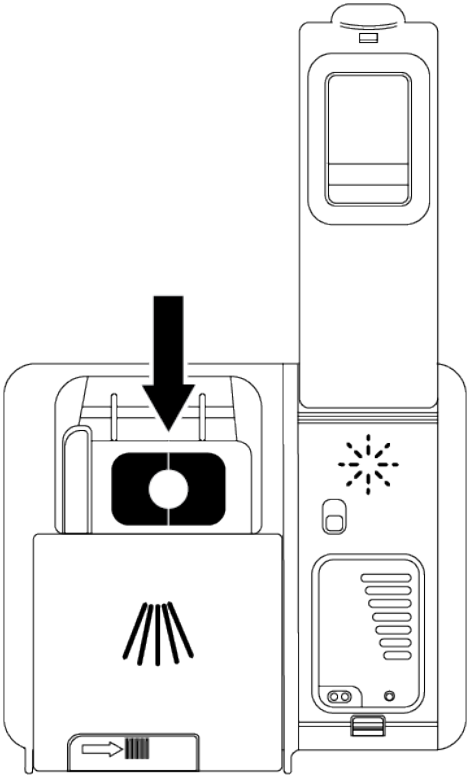

When using tablet detergents, follow the manufacturer's instructions on the detergent packaging.

If your dishes are wet when the wash cycle ends and/or you see limescale stains, especially on your glasses, contact the detergent manufacturer.

When you switch from tablet detergent to powder detergent:

- Make sure the salt and rinse aid compartments are full.
- Set the water hardness setting to the highest position and run a wash program with the machine empty.

- After an empty wash, readjust the water hardness setting appropriate for your tap water by referring to the user manual.
- Adjust the rinse aid setting appropriately.

6.7 Polisher

The rinse aid used in dishwashers is a special compound designed to increase drying efficiency and prevent water or limescale residues from remaining on the washed items. Therefore, care should be taken to ensure that there is rinse aid in the rinse aid compartment and that only rinse aids produced for use in dishwashers should be used.

Filling the rinse aid

1. Open the rinse aid lid using the latch.

1

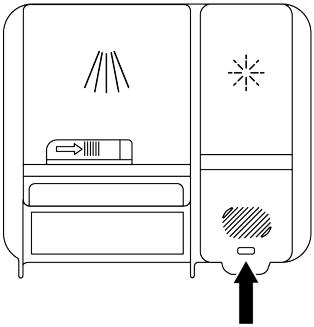

2. Fill the compartment to the MAX level.

2

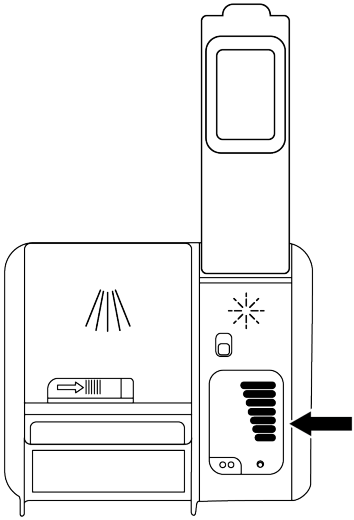

3. Close the compartment lid by pressing it gently.

3

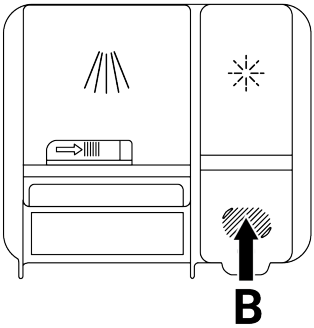

4. If there are water marks on the dinnerware after washing, it is necessary to increase the degree of the adjuster, and if a blue mark remains when wiped by hand, it is necessary to decrease it. This setting is set to position 3 when leaving the factory.

Rinse aid settings are explained under the heading "Adjusting the amount of rinse aid" in the operating section of the machine.

Wipe off any rinse aid that spills outside the compartment. Rinse aid accidentally spilled will cause foaming and reduce washing performance.

6.8 Parts that are not suitable for washing in the dishwasher

- Never wash dishes contaminated with cigarette ash, candle residue, polish, paint, chemicals, etc. in the machine.
- Do not wash forks, spoons and knives with wooden or bone handles, glued parts, plastic parts that are not heat-resistant, copper and tin containers in the machine.

Dishwasher-safe, as with hand washing, can cause discoloration and tarnishing of decorative prints on porcelain, aluminum, and silver. Some delicate glass and crystal types can lose their transparency over time. We recommend that you pay particular attention to whether the new tableware you purchase is dishwasher-safe.

6.9 Placing the dishes in the machine

If you place the dishes correctly in accordance with the washing capacity of your dishwasher, you will use the machine in the best way in terms of energy consumption, washing and drying performance.

- Before placing your dishes in the machine, scrape off any food residue (bones, fruit seeds, etc.) on them.
- If possible, place thin, narrow-bodied pieces in the middle compartments of the baskets.
- Place very dirty and large items in the lower basket and small, delicate and light items in the upper basket.
- Place deep containers such as bowls, glasses, and pots with their mouths facing downwards. This will prevent water from accumulating in them.

To prevent possible injuries, always place long and sharp dishes such as serving forks, bread knives, etc. in the cutlery basket with their sharp points facing downwards or horizontally on the dish baskets.

First empty the dishes in the lower basket, then the dishes in the upper basket.

Alternative Basket Layout Examples

Lower Basket

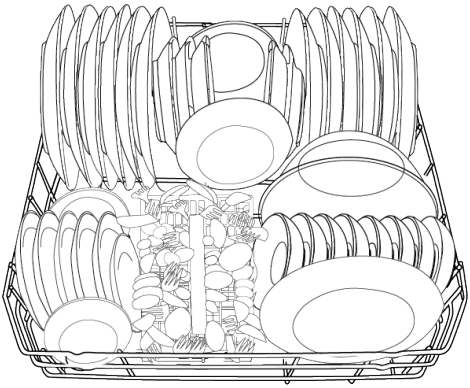

Upper Basket

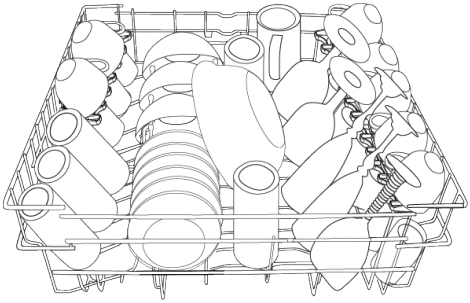

Incorrect Placements

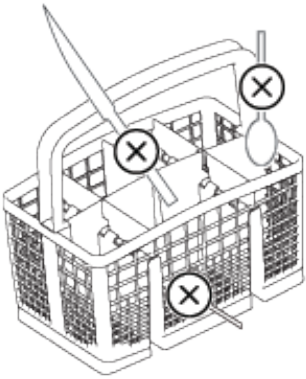

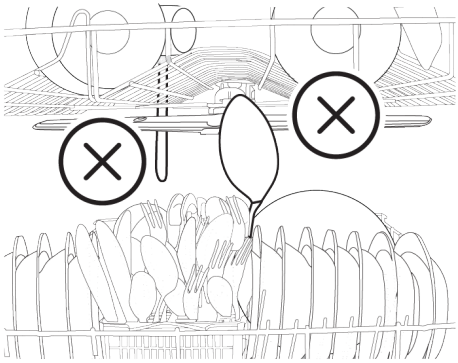

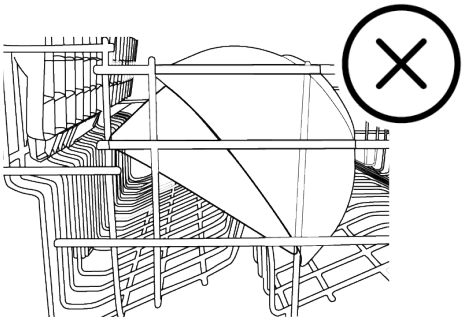

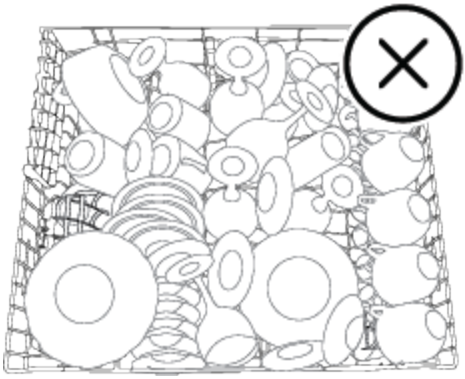

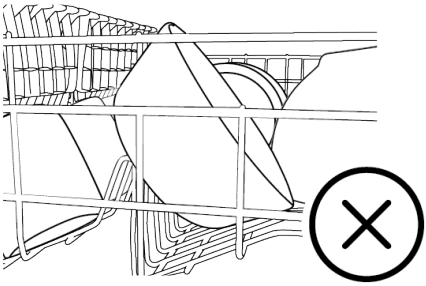

6.10 Lower Propeller

The lower impeller washes the dishes in the lower basket.

6.11 Upper Propeller

The upper fan washes the dishes in the upper basket.

6.12 Cutlery basket

(depends on model)
The cutlery basket is specially designed to wash your dishes such as knives, forks, spoons, etc. more cleanly.

Thanks to the movable (A, B) feature of the cutlery basket, you can create larger areas and make room for dishes of different sizes when placing your dishes in the lower basket.

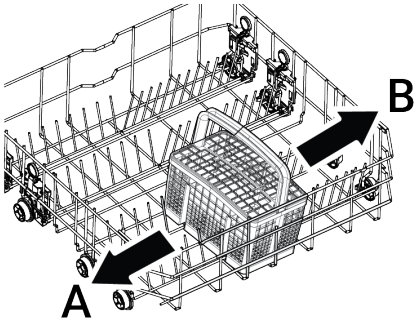

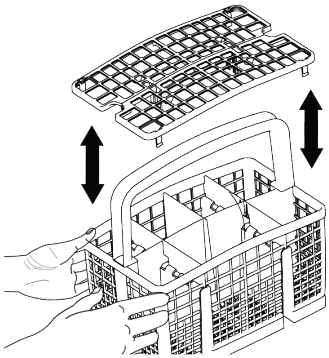

6.13 Cutlery basket

(depends on model)
The cutlery basket is specially designed to wash your dishes such as knives, forks, spoons, etc. more cleanly.
Thanks to the movable feature of the cutlery basket (A, B), you can create larger areas when placing your dishes in the lower basket and make room for your dishes of different sizes. If you want to place more cutlery, you can fold the separators to the side. (C)

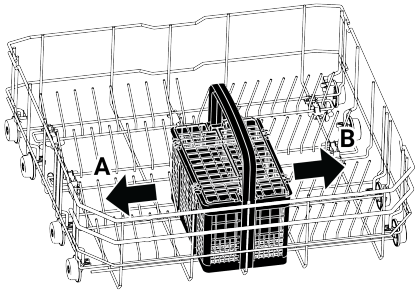

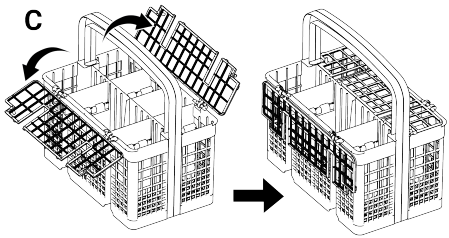

6.14 Lower basket multi-purpose / height adjustable service shelf

((depends on model)
Thanks to this accessory located in the lower basket of your machine, you can easily wash your extra glasses or items such as long ladles and bread knives.

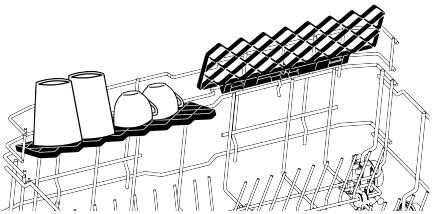

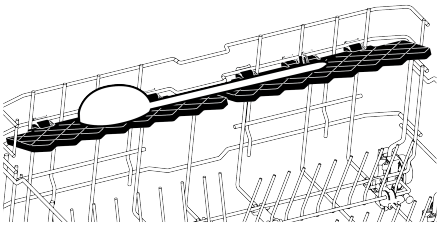

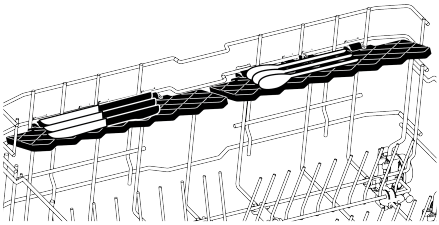

You can use the shelves as you wish by positioning them up or down, or you can close them to create ample space in your lower basket.

Make sure the fan does not hit the dishes you place on the shelves.

To bring the shelves into closed position;
1. Fold the shelf (A).
2. Slide the shelf up (B).
3. Place the shelf in the upright position (C).
4. Slide the shelf down and lock it using the tabs (D).

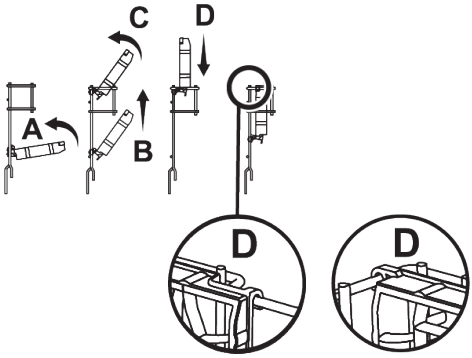

You can turn the shelf into open position by doing the same process in reverse.

To adjust the height of the shelves:
1. Fold the shelf (E).
2. Slide the shelf up (F).

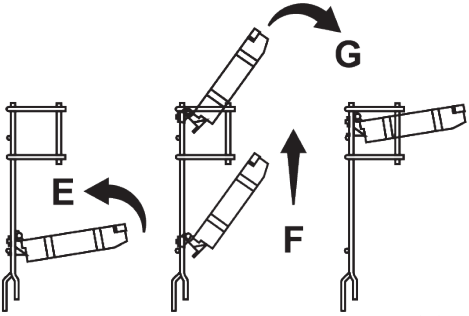

3. Open the shelf to the desired level (G).

6.15 Height Adjustable Upper Basket Shelf

(depends on model)
You can use the height-adjustable shelves in the upper basket of the machine as you wish by moving the lower and upper parts up or down according to the height of the glasses, cups, etc. (A, B, C).

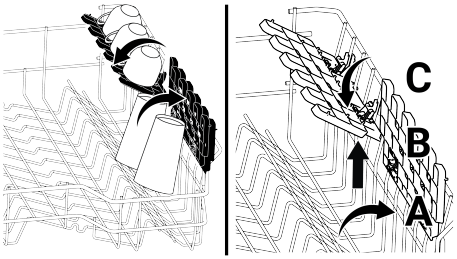

6.16 Bottom basket bottle wire

(depends on model)
The bottle wire is designed to help you wash wide-mouthed and tall items more easily. When you are not using the bottle wire, you can remove it from your basket by pulling it outwards from both sides (H).

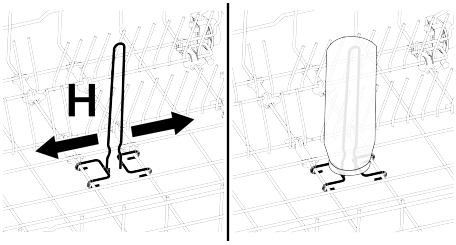

6.17 Upper basket multi-purpose service shelf

(Depending on the model)
Thanks to this accessory located in the upper basket of your machine, you can easily wash items such as long scoops and bread knives.

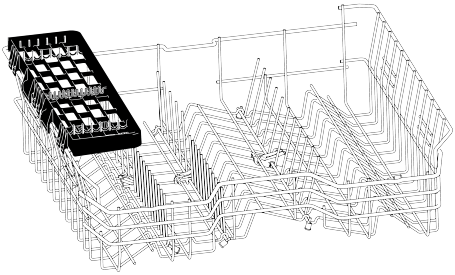

When you do not want to use it, you can remove the upper basket multi-purpose service shelf by lifting it up.

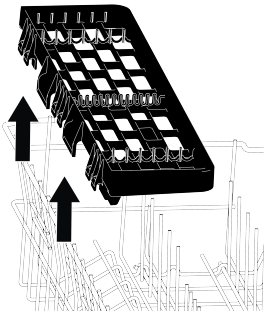

You can easily attach the upper basket multi-purpose serving shelf to the edge of your upper basket for reuse.

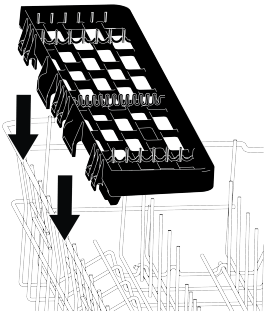

Illustration 2:

6.18 Upper basket multi-purpose service shelf

(depends on model)
Thanks to the multi-purpose service shelf in the upper basket of your machine, long service and kitchen utensils can be easily loaded and washed. In addition, the glass foot fixing sections located at the front of this accessory help to place glasses of appropriate size in the upper basket more easily.

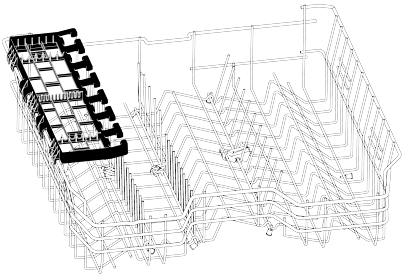

When you do not want to use it, you can remove the upper basket multi-purpose service shelf by lifting it up.

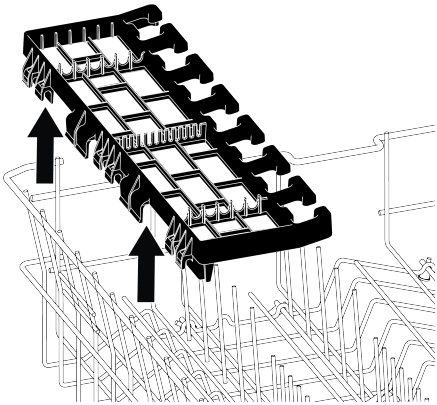

You can easily attach the upper basket multi-purpose serving shelf to the edge of your upper basket for reuse.

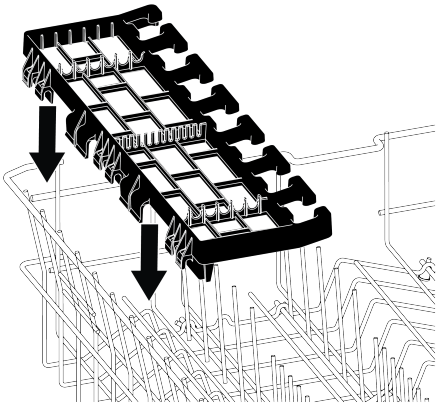

Illustration 3:

6.19 Adjusting the height of the upper basket

(model dependent)

The upper basket height adjustment mechanism is designed to create large areas in the upper or lower areas of the machine according to your needs by adjusting the height up or down when your basket is empty or full.

With this mechanism, you can use your basket in three different positions: bottom, middle and top.

1. To raise your basket, hold the upper basket wires with both hands and pull upwards while the basket is in its lowest position (A).
2. Release the basket when you hear a "Click" sound coming from the right and left mechanisms and the basket reaches the upper level.

If the height is not sufficient, repeat the same process.

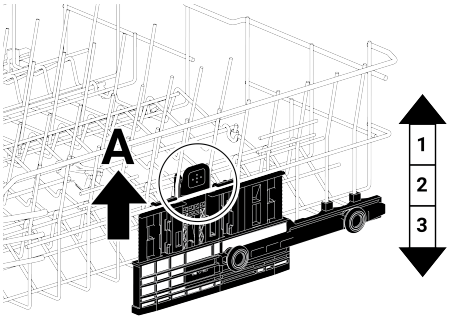

To lower the basket while it is in the top position;

1. Hold the upper basket wires with both hands, lift the basket up a little, and press and release the latches (B) shown in the figure at the same time.
2. Lower the basket from its current position to the lower position.
3. Once your basket reaches the lower level, release the basket.

If the height is not sufficient, repeat the same process.

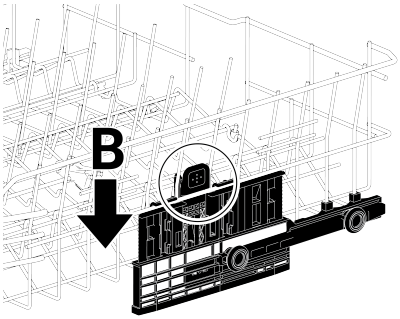

The movement mechanism may not work properly if the upper basket is overloaded or the weight distribution is not balanced. In heavier conditions, there is a risk of falling to the lower level.

Make sure that the adjustment mechanism is in the same position on the right and left of the upper basket.

6.20 Adjusting the height of the upper basket

(Depends on model)

The upper basket height adjustment mechanism is designed to create large areas in the upper or lower areas of the machine according to your needs by adjusting the height up or down when your basket is empty or full.

With this mechanism, you can use your basket in three different positions: bottom, middle and top.

To lower the basket while it is in the top position;

1. Hold the upper basket wires with both hands and lift the handle on the mechanism upwards as shown in the figure (A).
2. Lower the basket from its current position to the lower position.
3. Once your basket reaches the lower level, release the basket.

If the height is not sufficient, repeat the same process.

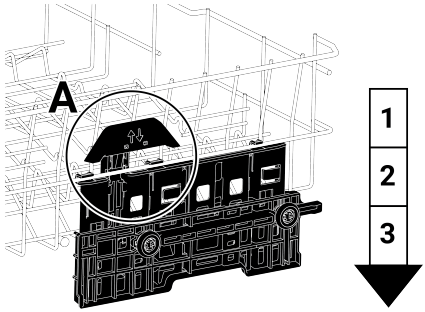

1. To raise your basket, hold the upper basket wires with both hands and pull upwards while the basket is in its lowest position (B).
2. When the basket reaches the upper level with a "Click" sound coming from the right and left mechanisms, release the basket.

If the height is not sufficient, repeat the same process.

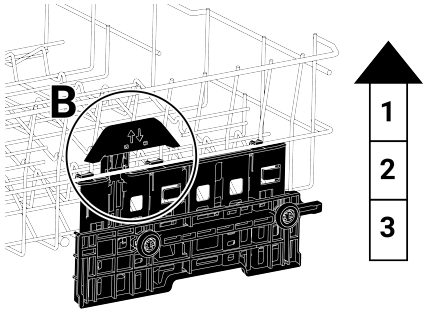

The movement mechanism may not work properly if the upper basket is overloaded or the weight distribution is not balanced. In heavier conditions, there is a risk of falling to the lower level.

Make sure that the adjustment mechanism is in the same position on the right and left of the upper basket.

6.21 Adjusting the height of the upper basket

(Depends on model)
Place large items such as pots etc. in the lower basket. You can adjust the height of the upper basket according to the size of the dishes you will wash. To change the height of the basket, use the basket wheels, turn the holders at the end of the upper basket rails to the sides and open them, take the basket out. Change the position of the wheels, place the basket back on the rail and close the holders.

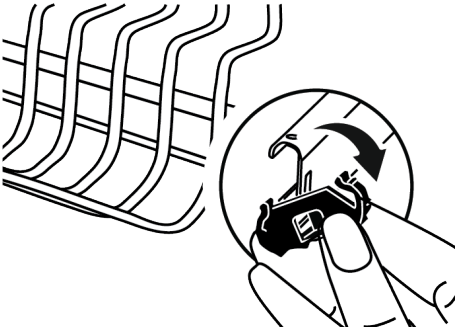

6.22 Lower Basket Bottle and Plate Holder Part

(Depending on the model)
The lower basket bottle and plate holder part (A) is designed to help you wash your narrow-mouthed and tall dishes more easily. After bringing the foldable wires to the horizontal position, you can place your bottles on the bottle holder parts. Secure your bottles by tightening them onto the bottle holder clip part, as in the image below.

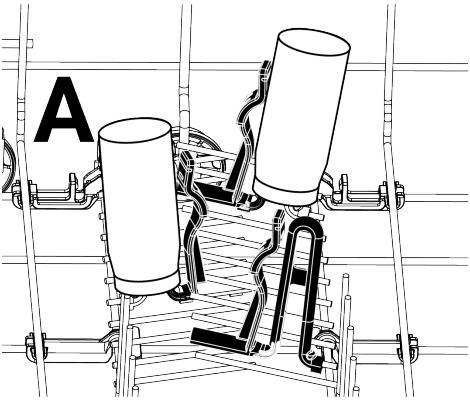

When you put the foldable wires in an upright position, you can place your plates without removing the holder parts.

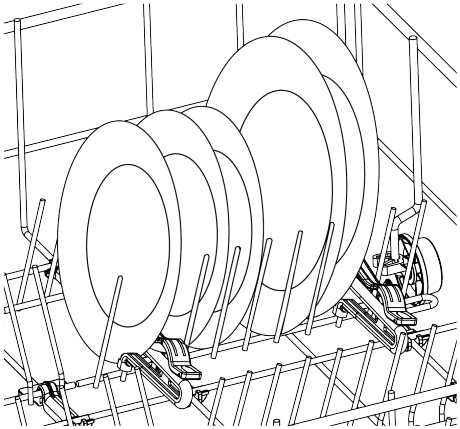

Holding the wires from the ends and placing them in a horizontal position may cause them to bend. Therefore, it would be appropriate to hold the wires in the middle from their bases and place them in a horizontal or vertical position.

6.23 Foldable upper basket wires

(Depends on model)
When you need ample space for your large dishes in the upper basket of the machine, you can use the foldable wires.

To bring the foldable wires to a horizontal position, hold the wires in the middle and push them in the direction of the arrow in the picture. Place your large dishes in the area that will be created. Lift the wires up to bring them back to an upright position.

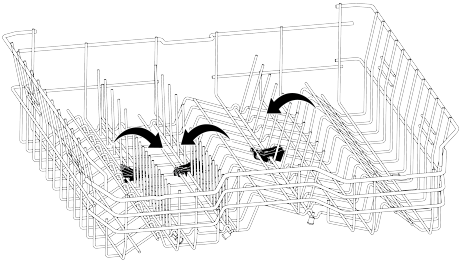

Holding the wires from the ends and placing them in a horizontal position may cause them to bend. For this reason, hold the wires in the middle from their bases and push them in the direction of the arrow, placing them in a horizontal or vertical position.

6.24 Ceiling cutlery basket

(Depends on model)
The ceiling cutlery basket is designed for you to wash your dishes such as forks, spoons, etc. by placing them between the combs on the tray.

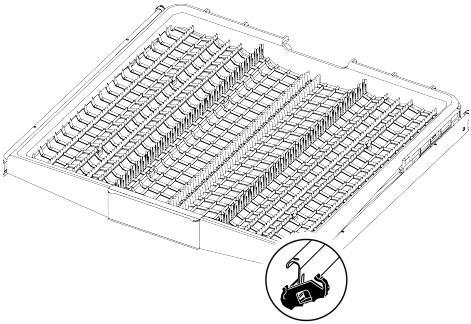

6.25 Ceiling cutlery basket

(Depends on model)

The ceiling cutlery basket is designed for you to wash your dishes such as forks, spoons, etc. by placing them between the combs on the tray.

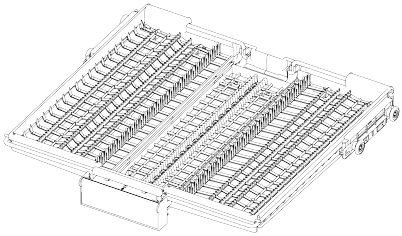

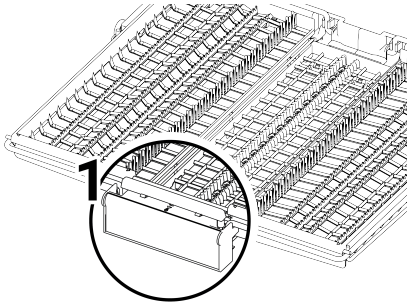

In models with partial movement feature, by pushing the lever (1) located on the handle, the tray in the middle part of the basket lowers to the lower position and the right and left side trays can be used movably by unlocking the system.
The space vacated by the side trays allows tall items to be loaded in the upper basket.

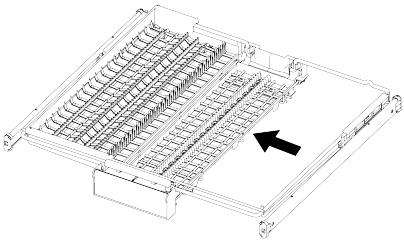

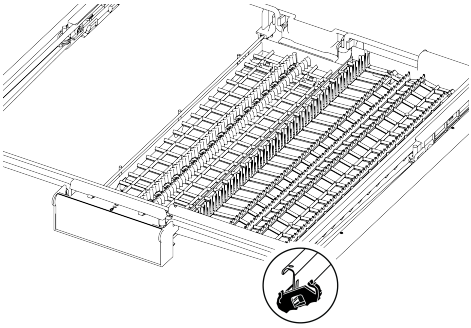

When the middle tray is in the lower position, high dishes such as coffee cups, ladles, etc. can be loaded onto the tray. When the side trays rest on the two edges, the handle can be pulled to lift the middle tray up and lock the system.

7 Operating the product

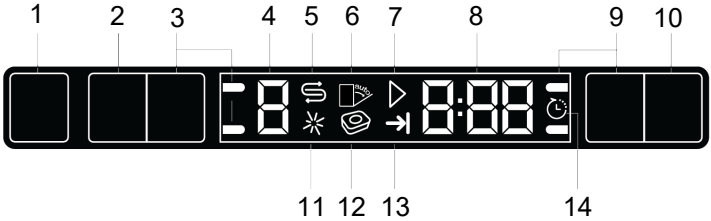

1 On / Off Button

2 Programme Selection/Cancel Programme Button (3 sec.)

3 Function Buttons

4 Program Indicator

5 Low Salt Warning Indicator

6 Auto Door Opening Indicator (depends on the model)

7 Start/Cancel Indicator

8 Delay Time / Cycle Time Indicator

9 Function Buttons

10 Delay Key

11 Low Rinse Aid Warning Indicator

12 Tablet Detergent Indicator (depends on the model)

13 Cycle Ended Indicator

14 Delay Indicator

Read the chapter ‘Safety Warnings’ first!

Power On/Off Button

When you press the Power On/Off button, the screen indicator lights turn on in the ON position. They will go out when the dishwasher is off.

Cycle Selection/Cancel Cycle Button

To select the programme, press until you see the desired programme in the programme display. To cancel the running programme, open the dishwasher door and Select Program / Cancel Program button for three seconds. After the 3 - 2 - 1 countdown, the display will show 0:01, close the door of the dishwasher and wait until the draining process is completed. Discarding

process will be completed within 2 minutes and your dishwasher will beep when it is done.

Function Buttons

When the Function Buttons are pressed during programme selection or delay selection, if the programme you selected supports the function you have selected, a positive button warning sound will be heard. When the indicator for the selected function is lit, this means the function has been selected. To cancel function selection, press and hold the function button again until the function indicator turns off.

Preparing the dishwasher

1. Open the door of the dishwasher.
2. Load your dishes as described in the user manual.
3. Ensure that lower and upper spray arms are rotating freely.
4. Put a suitable amount of detergent in the detergent reservoir.

Cycle selection

1. Turn your dishwasher on by pressing the On / Off button.
2. Inspect low salt and low rinse aid indicators and add salt and/or rinse aid if required.
3. Select the proper washing cycle for your dishes considering the cycle information and average consumption values table.
4. The selected programme starts when you close the door of your dishwasher.

7.1 Table of Program Information and Average Consumption Values

7.2 Additional functions

Dishwasher programs are designed for optimal cleaning, considering soil type, soil load, and dishware characteristics.

Additional functions are available to optimize your wash, saving time, water, and energy while enhancing hygiene and convenience.

Programme Data and Average Consumption Values Table

Programme number	0	1	2	3	4	5
Programme name	-	Eco *	Intensive	Delicate	Quick&Shine (#)	Mini (#)
Cleaning temperature	-	50 ºC	70 ºC	40 ºC	60 ºC	35 ºC
Degree of Soiling	-	Suitable for washing dishes with normal amount of soil. It is the most efficient program in terms of combined power and water consumption. This is used for assessing the compliance with EU's eco-design directive.	Suitable for heavily soiled dishes, pots and pans.	Special programme for gentle cleaning of delicate glassware.	Daily washing programme for normally soiled dishes in the fastest way.	Suitable for lightly soiled daily dishes that are scraped or pre-cleaned.
	-	Medium	High	Low	Medium	Low
Prewash	-	+	+	+	-	-
Wash	-	+	+	+	+	+
Dry	-	+	+	+	+	+
Duration (min)	-	280	120	115	58	30
Water (l)	-	10,9	15,5	15,40	11,8	11,80
Energy (kWh)	-	0,849	1,65	0,92	1,2	0,8
Selectable functions	-	T, E, Y, F, S, R, U, H, K	T, E, Y, F, R, U, H	T, E, Y, F, R	T, E, R, H	T, E

Loading Capacity: 14

The consumption values shown in the table were determined under standard conditions. Differences may therefore occur under practical conditions. * Reference programme for testing institutes. The tests in accordance with EN 50242/60436 must be carried out with a full water softener salt dispenser and a full rinse aid reservoir, and using the test programme. The values given for programmes other than Eco 50°C programme are indicative only. (#) Additional functions might cause changes in programme durations.

Additional functions may cause a change in program duration.

Additional functions are not suitable for all wash programs. The display of the function not suitable for the program will not be active.

The functions that can be used in the washing programs are indicated by letters such as "A, B, D, E, G, F, F, K..." in the "Program information and average consumption values table". You can find instructions on how to use these functions in the "Additional functions" section of the user manual.

Some auxiliary functions cannot be used together. If the function you have selected is not active even though it appears in the "Program information and average consumption values table", you can activate it after turning off the other auxiliary functions.

To add additional functions to the program:

1. Select the desired wash program.
2. When you select an additional function, the indicator for the additional function lights up. When you press the function key again, the indicator goes out and the selection is canceled.

If your machine has sub-menu functions depending on the model, refer to the instructions in the additional functions section for their use.

"Not all of the functions indicated with letters such as "A,B,D,E,G,F,K..." in the program information and average consumption values table can be used in your machine, the functions that can be used in your machine are described in the additional functions section of this manual.

Self Dry Function (K)

(Depending on the model)

The "Self Dry" feature on your machine increases drying efficiency and saves energy. When you activate this function, the door of your machine opens automatically at the end of the wash cycle.

The function can extend the duration of the selected program for up to 35 minutes.

Self Dry**to activate the feature;**

1. Press the F3 key. When the function is active, the indicator light showing the function selection will illuminate.

2.Self Dry is activated.

When you activate this function, the lid of your machine will open automatically at the end of the washing program.

Self Dry**to disable the function;**

1- Press the F3 key. When the function is canceled, the indicator light showing the function selection turns off.

2. The Self Dry feature is disabled.

The function can extend the duration of the selected program for up to 35 minutes.

Self Dry feature opens the door at the end of the wash thanks to the "door opening shafts". This process takes about 2 minutes. If the power is cut off while the shafts are coming out, do not force the door to close. When the power is restored, the process is complete and the shafts will be pulled back in.

If feature Self Dry is active, the door can be automatically opened during the drying step and the program flow can continue. If the product has a display, the door will remain open and the countdown timer will continue until the drying is complete and the program ends.

7.3 Functions

Hygiene Intense function (H)

(Model dependent)

Designed to be used when more hygiene is needed in dishwashing. This function increases the washing and rinsing temperatures and duration of the selected program. In addition, additional rinsing is also performed to ensure that your dishes are washed and rinsed more hygienically.

In some models, the HygieneMax function is activated via the HomeWhiz application.

If the Automatic Door Opening feature is active on some products, function Hygiene Intense can be selected.

Function (E) SteamGloss

(Model dependent)

It provides superior drying performance. This function can be selected to extend the program duration.

In some models, the Extra Dry function is activated via the HomeWhiz app.

Half Load function (Y)

(Model dependent)

This is used when you want to run your machine without fully loading it.

1. Load your dishes into the dishwasher as desired.

2.Turn the machine on using the On/Off button.

3. After selecting your desired program, press the Half Load button.

When this function is enabled, the function key indicator lights up.

Thanks to the half-load function, you can save water and energy by using both the upper and lower baskets of the machine simultaneously.

4.Run the program by pressing Start / Wait / Cancel.

Corner Washing Mode Warning

(Model Dependent)

It is possible to check the program status from the module in the upper left corner of the machine while the program is running and after it has finished. After the selected program has started, the blue indicator indicates that the program is in the washing phase, and the red indicator indicates that it is in the drying phase. The green indicator means the program has finished. The module indicators turn off if the door is opened while the program is running or after the program has finished.

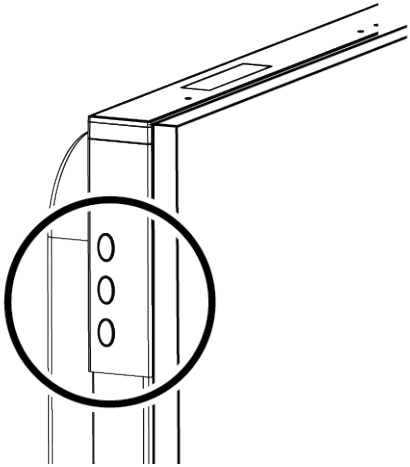

In models with corner wash indicators and automatic door opening, the red LED (drying step in progress) remains lit after the door is opened.

Blue: Washing

Red: Drying

Green: The program is complete.

7.4 Changing the Warning Tone Level

1.Press the Delay and P keys simultaneously after turning your dishwasher on. Keep pressing until the countdown of 3, 2, 1 ends on the screen.

2. To navigate to the ‘S:’ on the display, press the P key.

3.Each time you press the delay key, the warning volume changes to "S:0" off, "S:1" medium, "S:2" high.
4.Turn off your dishwasher with On / Off button to save.
Your dishwasher is set to "S:2" at the factory.

7.5 Programming the Washing Period

If economy billing is applied for electricity in your region, you can use the delay function to wash your dishes at the relevant times. You can delay the start time of the programme you selected by up to 24 hours.
1.Press the delay key after selecting the washing programme and any other additional functions.
2.When you press the delay key, “0:30” is displayed on the Screen Info Line and Delay indicator starts to flash.
3.Set the desired period by pressing the delay key. Each time you press the button, the time increases in 30 minute increments up to 6 hours and then in 1 hour increments up to 24 hours.
4.Close the door of your dishwasher after the delay. Cycle shall start automatically when the delay period is over.

Changing the settings while the delay function is active

You cannot make changes to the washing cycle, additional functions, or to the delay period while the delay function is active.

You cannot set/change the cycle and auxiliary functions after the cycle begins.

To cancel the delay function

Open the dishwasher door and press Select Cycle / Cancel Cycle button for three seconds. After the 3 - 2 - 1 countdown, the display will show 0:01, close the door of the dishwasher and wait until the draining process is completed. Discarding process will be completed within 2 minutes and your dishwasher will beep when it is done.

The delay function cannot be set after the cycle has started.

7.6 Starting of the programme

Close the door of your dishwasher to start your dishwasher after selecting the programme and additional functions.
Dishwasher softens the water as per the hardness of the mains water. The washing cycle period may also change while the program is being executed as a result of the room temperature, mains water temperature and the amount of dishes.
Care to avoid opening of the door while the dishwasher is being operated. Be careful as steam may come out when you open the door of the dishwasher.
After rinsing, the dishwasher will be quiet for a while in pause mode then will proceed to the drying step to drain all the water left on the dishes and inside the dishwasher and to clean the water softener.

7.7 Cancelling the Cycle

Open the dishwasher door and press Select Cycle / Cancel Cycle button for three seconds. After the 3 - 2 - 1 countdown, the display will show 0:01, close the door of the dishwasher and wait until the draining process is completed. Discarding process will be completed within 2 minutes and your dishwasher will beep when it is done.

Detergent or rinse aid may remain inside the dishwasher and/or the dishes being washed as per the step of the program you have cancelled.

7.8 Low Salt Warning indicator

Check the low salt indicator on the screen of your dishwasher to see if you have softening salt in your dishwasher. Add salt to the salt reservoir when the low salt indicator on the display comes on.

The Water Softening System section describes how to set the water hardness level.

7.9 Low Rinse Aid Warning indicator

Check the low rinse aid indicator on the screen of your dishwasher to see in you have enough rinse aid in your dishwasher. Add rinse aid to the rinse aid reservoir when the low salt indicator on the display comes on.

Setting the Rinse Aid Amount

1.Press the Delay and P keys simultaneously after turning your dishwasher on. Keep the keys pressed for a while after observing the 3,2,1 count down on the screen.

2. Move to position (P) on the screen by pressing the P key.

3.Set to a proper level with the Delay key.

4.Switch your dishwasher off with the On/Off button to save.

Applies no rinse aid in P:0 position during washing programme.

Applies 1 dose of rinse aid in the P:1 position.

Applies 2 dose of rinse aid in the P:2 position.

Applies 3 dose of rinse aid in the P:3 position.

Applies 4 dose of rinse aid in the P:4 position.

7.10 End of programme

When the programme you have selected ends, an audible warning will alert you to switch off the dishwasher. This audible warning is repeated at regular intervals until your dishwasher switches off. Programme End indicator illuminates when the washing programme has ended.

1. Open the cover of the dishwasher.

2. Press the On/Off key to switch off your dishwasher

3. Turn off the tap.

4. Unplug the dishwasher from the socket.

To save energy, the dishwasher switches off automatically at the end of the programme or if the programme is not started. After washing, leave the dishes in the dishwasher for about 15 minutes to cool down. Your dishes shall dry faster if you half close the cover of your dishwasher within this period. This shall improve the drying efficiency of the dishwasher.

8 Maintenance and Cleaning

8.1 Maintenance and cleaning

Read “Safety Instructions” section first!

Before cleaning the machine, unplug it and turn off the tap.

Do not use abrasive materials when cleaning.

For the machine to work efficiently, clean the filters and impellers at least once a week.

If cleaned at regular intervals, the life of the product will be extended and frequently encountered problems will be reduced.

Cleaning the exterior of the machine

Gently wipe the exterior of your machine and the door seals with a delicate cleaning agent and a damp cloth. Wipe the "control panel" only with a slightly damp cloth.

Cleaning the inside of the machine

Clean the machine monthly by running it at the highest possible temperature with detergent or special machine cleaning agents. This will help to remove residues and limescale from the inside of the machine.

If there is water left in the machine, drain the water in the machine by following the procedures in the “Cancelling the program” section. If the water cannot be drained, remove the filters as indicated in the “Cleaning the filters” section and check if there

are any dirt particles that have accumulated at the bottom of the machine and blocked the water path, and clean them if necessary.

8.2 Cleaning the filters

(Depends on model)

For the machine to work efficiently, clean the filters at least once a week. Check if there is any food residue on the filters. If there is food residue, remove the filters and clean them thoroughly under the tap.

1. Remove the micro filter and coarse filter group by turning it counterclockwise and pulling it out.

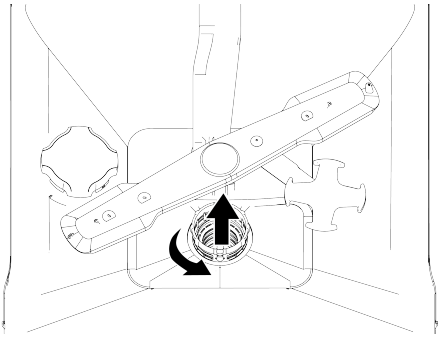

2. Pull the metal/plastic filter (3) out of its place.

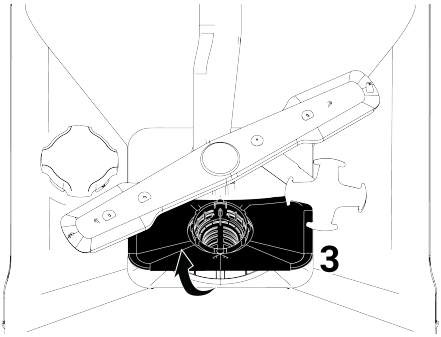

3. Press the two tabs on the coarse filter inwards to separate the coarse filter from the assembly.

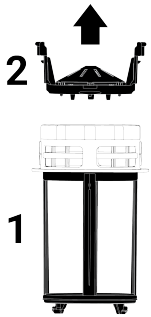

4. Clean all three filters under the tap with a brush.
5. Replace the metal/plastic filter.
6. Place the coarse filter into the micro filter. Make sure it is properly seated. Turn clockwise until you hear a click.

The machine should not be used without a filter.

Failure to install the filters correctly will reduce washing effectiveness.

8.3 Cleaning the hose filter

The filter on the water inlet hose prevents dirt (sand, clay, rust, etc.) that may come from the city network or your water system from damaging the machine. Check the filter and hose from time to time and clean them if necessary.

1. Turn off the tap and remove the hose.
2. After removing the filter from the hose, clean it under the tap.
3. Place the cleaned filter back into its place inside the hose.
4. Attach the hose to the faucet.

(Depends on model)

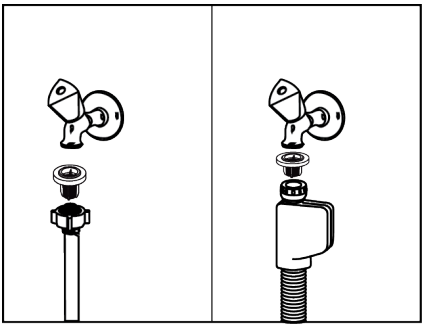

8.4 Cleaning the propellers

Clean the impellers at least once a week to ensure efficient operation of the machine.

Lower propeller

Check if the lower impeller (1) holes are clogged. If there is a blockage, remove the impeller and clean it. You can remove the lower impeller by pulling it upwards (Depends on model)

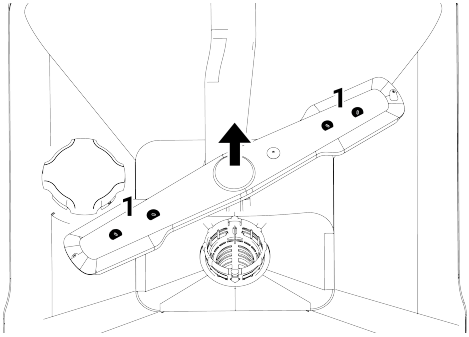

Check if the holes of the impeller assembly are clogged. If there is a blockage, remove the impeller assembly and clean it. (Depends on model)

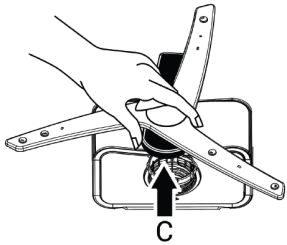

To remove and clean the lower propeller group, hold it with one hand from the points (C) shown in the figure and pull it upwards. After cleaning, reattach the propeller group by following the same steps in reverse. (Depends on model)

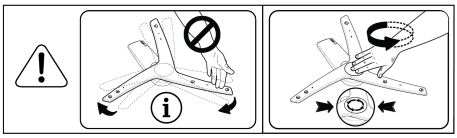

Do not attempt to turn the propeller by holding the ends. Trying to turn it by the ends may cause the gear system inside the propeller to break.

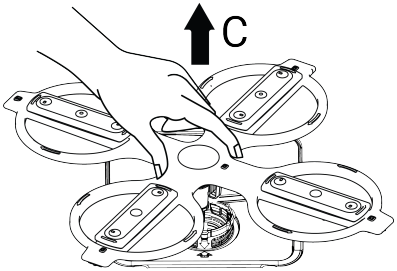

To remove and clean the lower propeller group, hold it with one hand from the points (C) shown in the figure and pull it upwards. After cleaning, reattach the propeller group by following the same steps in reverse. (Depends on model)

Upper propeller

Check if the upper impeller (1) holes are clogged. If there is a blockage, remove the impeller and clean it. You can remove the upper impeller by turning its nut to the left. When reattaching the upper propeller, be sure to tighten the nut fully.

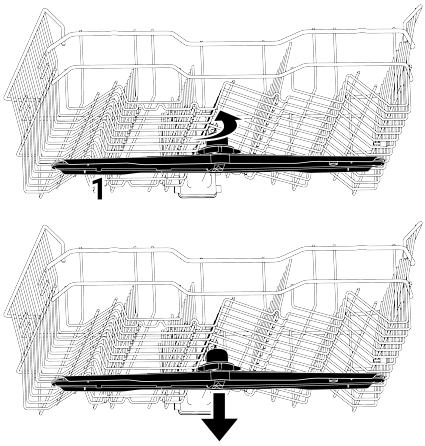

9 Troubleshooting

9.1 Error Codes, Causes, and Solutions

Error Code	Reason	Solution
E01 Warning P1 Blinks The power LED blinks.	Water ingress into the chassis error	1- The error detection algorithm is activated. 2- The program ends. If you keep seeing the mistake, 1-Turn off the electricity. 2. Close the valve. 3. Contact an authorized service center.
E02 Warning P2 Blinks The water cut-off icon lights up. The washing machine LED lights up.	Water outage error	Check the network.
	The filter is clogged.	1-Disconnect the power supply. 2. Disconnect the water supply. 3. Remove the water inlet hose. 4. Check and clean the filter. 5. Connect the water supply. 6. Connect the electricity.
	Other	If the error persists, 1- Turn off your machine. 2. Contact an authorized service center.
E06 Warning P2 blinks P6 blinks	The temperature sensor inside the machine is faulty.	If you keep seeing this error and your washing performance has decreased, 1- Turn off your machine. 2. Contact an authorized service center.
E07 Warning F2 blinks F1 and F2 blink	The water meter is faulty.	1- The error detection algorithm is activated. 2- The program ends. If you keep seeing the mistake, 1-Turn off the electricity. 2. Close the valve. 3. Contact an authorized service center.

Error codes may vary depending on the model.

9.2 Troubleshooting

The machine is not working.

- The power plug may not be plugged in. >>> Check if the power plug is plugged in.
- The fuse may have blown. >>> Check the fuses in your house.
- There might not be any water. >>> Make sure the water inlet tap is open.

- The machine door may be open. >>> Make sure you close the machine door.
- The "On/Off button" may not have been pressed. >>> Make sure you have turned on the machine by pressing the "On/Off button".

The dishes are not being washed properly.

- The dishes are placed haphazardly. >>> Place the dishes as directed in the instruction manual.
- The wrong program has been selected. >>> Please choose a program that washes at a higher temperature and for a longer duration.
- The dishes are very dirty >>> Remove coarse dirt from your dishes with a napkin before placing them in the dishwasher.
- The propellers are jammed. >>> Before starting the program, manually rotate both the upper and lower propellers to ensure they rotate freely.
- The propeller vents are clogged. >>> The bottom or top propeller vents may be clogged with food debris such as lemon seeds. Clean the propellers at regular intervals as shown in the “Cleaning and Maintenance” section.
- The filters are clogged. >>> Check if the filter system is clean. Clean the filter system at regular intervals as shown in the “Cleaning and maintenance” section.
- The filters are not installed correctly. >>> Check the filter system and make sure they are installed correctly.
- The baskets are overloaded. >>> Do not overload the baskets beyond their capacity.
- The detergent has been stored under unsuitable conditions. >>> If you are using powder detergent, do not store the detergent package in damp places. If possible, store it in a container with a lid. We recommend using tablet detergent for ease of storage.
- Not enough detergent has been added. >>> If you are using powder detergent, add the appropriate amount according to the level of soiling of your dishes and the program instructions. We recommend using tablet detergent for best results.
- Rinse aid is insufficient. >>> Check the rinse aid low warning indicator and add rinse aid if necessary. If there is enough rinse aid in the machine, increase the rinse aid setting.
- The detergent compartment lid is not closed. >>> After filling with detergent, be sure to close the detergent compartment lid.

The dishes are not being dried.

- The dishes are placed haphazardly. >>> Place your dishes so that water does not accumulate inside them during washing.
- Rinse aid is insufficient. >>> Check the rinse aid low warning indicator and add rinse aid if necessary. If there is enough rinse aid in the machine, increase the rinse aid setting.
- The machine was emptied immediately after the wash cycle was finished. >>> Do not empty your machine immediately after the wash cycle is complete. Allow the steam to escape by opening the door slightly, and empty the machine when the dishes have cooled down to a touchable level. Begin emptying from the bottom basket. This prevents any water remaining on items in the upper basket from dripping onto items in the lower basket.
- The wrong program has been selected. >>> Short-duration programs have low rinsing temperatures, resulting in poor drying performance. For better drying performance, choose longer programs.
- Tablet detergent has been used, but the tablet button has not been pressed >>> If your machine has a "tablet detergent" function when using multi-purpose detergent, activate it.
- The surface quality of the kitchenware is poor. >>> Kitchenware with damaged surfaces cannot provide the expected washing performance and is not hygienically safe to use. Furthermore, water is diffi-

cult to drain from damaged surfaces. Washing such kitchenware in a dishwasher is not recommended.
- It's natural to experience drying problems with Teflon cookware. This is related to the nature of Teflon. Because Teflon and water have different surface tensions, water droplets remain on the Teflon surface like beads.

Tea, coffee, or lipstick stains remain on the dishes.

- The wrong program has been selected. >>> Please choose a program that washes at a higher temperature and for a longer duration.
- The surface quality of the kitchenware is deteriorated. >>> Tea, coffee stains, and other painted stains have seeped into the damaged surfaces, making them unsuitable for dishwasher use. Expected washing performance cannot be achieved with kitchenware of damaged surfaces, and their use is not hygienic. Washing such kitchenware in a dishwasher is not recommended.
- The detergent has been stored under unsuitable conditions. >>> If you are using powder detergent, do not store the detergent package in damp places. If possible, store it in a container with a lid. We recommend using tablet detergent for ease of storage.

Dishes are left with limescale stains, and glassware takes on a cloudy appearance.

- Rinse aid is insufficient. >>> Check the rinse aid low warning indicator and add rinse aid if necessary. If there is enough rinse aid in the machine, increase the rinse aid setting.
- The water hardness setting is too low or the salt level is insufficient. >>> Check the water hardness setting by accurately measuring the hardness of the tap water.
- There is a salt leak. >>> When filling with salt, be careful not to spill it around the filling opening. After filling with salt, make sure the salt reservoir lid is closed. Run the pre-wash program to clean any spilled salt from inside the machine. Check the lid again at the end of the program, as any salt particles remaining under the lid will dissolve during the pre-wash step and may therefore loosen.

There's a strange smell inside the machine.

- A new washing machine has its own characteristic smell. This smell will disappear after a few washes.
- The filters are clogged. >>> Check if the filter system is clean. Clean the filter system at regular intervals as shown in the “Cleaning and maintenance” section.
- The rinse aid dispenser contains chemicals that can cause odors. >>> Do not use chemicals such as vinegar, hand washing detergent, or descaler.
- Dirty dishes have been left in the dishwasher for 2-3 days. >>> If you are not going to start the machine immediately after putting the dishes in, remove the dirt from the dishes and run the detergent-free pre-wash program every two days. In such cases, do not close the machine door completely to prevent odor formation inside the machine. You can also use odor removers and machine cleaners available on the market.

Rust stains, discoloration, and surface deterioration on dishes.

- There is a salt leak. >>> Salt can cause deterioration and rust on metal surfaces. When filling with salt, be careful not to spill it around the filling opening. After filling with salt, make sure the salt reservoir lid is closed. Clean any spilled salt from inside the machine by running the pre-wash program. Check the lid again at the end of the program, as any salt particles remaining under the lid will dissolve during the pre-wash step and may therefore loosen.

- Salty food residue has remained on the dishes for a long time. >>> If cutlery contaminated with such food is to be left in the dishwasher, it should be pre-washed to remove the dirt from the surface, or the dishes should be washed immediately.
- The electrical installation does not have a grounding line. >>> Check if your machine is connected to a proper ground line. Otherwise, static electricity generated inside the machine will cause arcs and pitting on the surface of metal objects, removing the protective layer and causing discoloration.
- Strong cleaning agents such as bleach have been used. >>> The protective layer on metal surfaces is damaged when it comes into contact with cleaners like bleach and loses its effectiveness over time. Do not wash your dishes with bleach.
- Metal utensils, especially knives, have been used for purposes other than their intended use. >>> Using knives for purposes such as opening cans damages the protective coating on the tips. Do not use metal kitchen utensils for purposes other than their intended use.
- The cutlery is made of low-quality stainless steel. >>> Rusting is inevitable for such items and they should not be washed in dishwashers.
- Previously rusted kitchen utensils were washed in the dishwasher. >>> During washing, rust from a rusty item can migrate to other stainless steel surfaces, causing rust to form on those surfaces as well. Such items should not be washed in dishwashers.

There is detergent residue on the detergent dispenser.

- The detergent was added a long time before the washing cycle began. >>> Make sure to add the detergent just before starting the wash.
- The detergent dispenser lid is prevented from opening during washing. >>> Place the dishes in a way that does not obstruct the opening of the detergent dispenser lid and the flow of water from the impellers into the dispenser.
- The detergent has been stored under unsuitable conditions. >>> If you are using powder detergent, do not store the detergent package in damp places. If possible, store it in a container with a lid. We recommend using tablet detergent for ease of storage.
- The propeller vents are clogged. >>> The bottom or top propeller vents may be clogged with food debris such as lemon seeds. Clean the propellers at regular intervals as shown in the “Cleaning and Maintenance” section.

The patterns and decorations on the kitchenware are fading.

- Patterned glasses and porcelain with overglaze patterns are not suitable for washing in a dishwasher. Manufacturers of glass and porcelain tableware do not recommend washing these types of cookware in a dishwasher.

The dishes are getting scratched.

- Kitchen utensils and accessories made of or containing aluminum should not be washed in a dishwasher.
- There is a salt leak. >>> When filling with salt, be careful not to spill it around the filling opening. Spilled salt can cause scratches. After filling with salt, make sure the salt reservoir lid is closed. Run the pre-wash program to clean any spilled salt from inside the machine. Check the lid again at the end of the program, as any salt particles remaining under the lid will dissolve during the pre-wash step and may therefore loosen.
- The water hardness setting is too low or the salt level is insufficient. >>> Check the water hardness setting by accurately measuring the hardness of the tap water.
- Improper placement of dishes. >>> When placing glasses and other glass kitchenware in the baskets, rest them against the edge, shelves, or glass support wire of the basket, not on other dishes. During washing, the impact of water causing

two glasses or other dishes to bump into each other can cause scratches/breakage on the surfaces.
- The glass cups are left with a hazy, milk-stain-like mark that doesn't come off when wiped by hand. When held up to the light, a bluish/rainbow-colored appearance emerges.
- Too much rinse aid has been used. >>> Lower the rinse aid setting. Be sure to clean up any rinse aid that spills when refilling.
- Corrosion has occurred on the glass due to soft water. >>> Check the water hardness setting by accurately measuring the hardness of your tap water. If your tap water is soft (<5 dH), do not use salt. Use washing programs that wash at higher temperatures (such as 60-65 degrees). You can also use commercially available glass-protecting detergents.

Foam is forming in the machine.
- The dishes were hand-washed with dish soap before being placed in the dishwasher, and then put in the machine without rinsing. >>> Hand-washing dish soaps do not have foam control. There is no need to hand-wash the dishes with detergent before putting them in the dishwasher. Simply rinse off any coarse dirt from the surface of the dishes with water or scrape it off with a paper towel or fork.
- Rinse aid was spilled inside the machine while refilling. >>> Be careful not to spill rinse aid inside the machine while refilling. Clean up any spilled rinse aid with a paper towel or napkin.
- The rinse aid compartment lid was left open. >>> Make sure to close the rinse aid compartment lid after filling it with rinse aid.
- The detergent may have expired or may not have been stored under appropriate conditions. >>> Check the information on the detergent packaging.

Foam is leaking out of the dishwasher.
- The machine may not be level, or the feet may not be properly adjusted. >>> Ensure the machine is level.
- It might be due to the detergent you're using. >>>Change the detergent.

Kitchen utensils are breaking.
- The dishes are placed haphazardly. >>> Place the dishes as directed in the instruction manual.
- The baskets are overloaded. >>> Do not overload the baskets beyond their capacity.
- Water remains in the dishwasher after the program finishes.
- The filters are clogged. >>> Check if the filter system is clean. Clean the filter system at regular intervals as shown in the “Cleaning and maintenance” section.
- The drain hose is clogged/blocked. >>> Check the drain hose. If necessary, remove it, clear the blockage, and reinstall it as directed in the installation instructions.

10 DISCLAIMER / WARNING

Some (simple) failures can be adequately handled by the end-user without any safety issue or unsafe use arising, provided that they are carried out within the limits and in accordance with the following instructions (see the “Self-Repair” section).
Therefore, unless otherwise authorized in the “Self-Repair” section below, repairs shall be addressed to registered professional repairers in order to avoid safety issues. A registered professional repairer is a professional repairer that has been granted access to the instructions and spare parts list of this product by the manufacturer according to the methods described in legislative acts pursuant to Directive 2009/125/EC.

However, only the service agent (i.e. authorized professional repairers) that you can reach through the phone number given in the user manual/warranty card or through your authorized dealer may provide service under the guarantee terms. Therefore, please be advised that repairs by professional repairers (who are not authorized by Beko) **shall void the guarantee.**

Self-Repair

Self-repair can be done by the end-user with regard to the following spare parts: Gaskets, filters, door hinge, baskets, propellers, plastic accessories etc. (an updated list is also available in support.beko.com as of 1st of March 2021).

Moreover, to ensure product safety and to prevent risk of serious injury, the mentioned self-repair shall be done following the instructions in the user manual for self-repair or which are available in support.beko.com For your safety, unplug the product before attempting any self-repair.

Repair and repair attempts by end-users for parts not included in such list and/or not following the instructions in the user manuals for self-repair or which are available in support.beko.com , might give raise to safety issues not attributable to Beko , and will void the warranty of the product.

Therefore, it is highly recommended that end-users refrain from the attempt to carry out repairs falling outside the mentioned list of spare parts, contacting in such cases authorized professional repairers or registered professional repairers. On the contrary, such attempts by end-users may cause safety issues and damage the product and subsequently cause fire, flood, electrocution and serious personal injury to occur.

By way of example, but not limited to, the following repairs must be addressed to authorized professional repairers or registered professional repairers: motor, circulation pump, drain pump, heat pump, heaters, piping, hoses, clamps, valve filters, aqua stop, door, panel, electronic cards, display cards, water level switch, flow meter, thermostat, temperature sensors etc.

The manufacturer/seller cannot be held liable in any case where end-users do not comply with the above.

The spare part availability of the dishwasher that you purchased is 10 years. During this period, original spare parts will be available to operate the dishwasher properly.

11 HOW TO OBTAIN SERVICE FOR YOUR APPLIANCE

Please keep your purchase receipt or other proof of purchase details in a safe place; you will need to have this documentation available should the product require attention under guarantee.

Please take a few moments to complete the details below, as you will need this information when you call us, or to use our online services. For help please visit beko.co.uk/support/model-finder

•The product model number is printed on the Operating Instruction Booklet / User guide

•The product model and serial number is printed on the Rating Label affixed to the appliance.

•The Retailer (Purchased from) and Date of purchase will be printed on your purchase receipt or otherproof of purchase paperwork

Recording of these details alone will not count as proof of purchase. A valid proof of purchase is required for requesting service under guarantee.

Model Number	Serial Number	Purchased from	Date of Purchase

For service under guarantee or for product advice please call our Customer Service Team

Before requesting service please check the troubleshooting guide in the Operating Instructions booklet or our video support found beko.co.uk/support/how-to-guides, as a charge may be levied where no fault is found, even though your product may still be under guarantee.

After arranging a service visit please ensure the area around the product must be easily accessible to the Service Representative, without the need for cabinets or furniture to be removed or moved.

It is your responsibility to ensure our Service Representatives have a clean and safe environment to carry out any repairs.

Please have your Model number and Serial number available when you call us, as you will be required to provide it prior to booking a service visit

UK Mainland & Northern Ireland:

0333 207 9710

Landline or mobile calls to 0333 numbers cost no more than calls to geographic numbers 01 or 02 and are charged at the basic rate. Calls from landlines and mobiles are included in free call packages but please check with your telephone service provider for exact call charges.

Republic of Ireland

01 862 341

Service once the manufacturers guarantee has expired

If you have purchased an extended guarantee please refer to the instructions contained within the extended guarantee agreement document, otherwise please call us using the appropriate number above, where service can be obtained at a charge. If you do not have any extended guarantee you can call the Customer Services Team for UK customers on 0330 123 1750 and ROI customers on 01 862 3411

Contact us though our website

Send us a secure message through our online contact us form. Please visit our website, click Contact Us and choose a product support topic from the list of options. Complete the required details and click send message.

Product registrations

For UK registrations please visit beko.co.uk/register and for the Republic of Ireland visit beko.ie/register

12 BEKO UK AND ROI STANDARD MANUFACTURER GUARANTEE TERMS AND CONDITIONS

Your new Beko product is guaranteed against faulty materials, defective components or manufacturing defects.

The standard guarantee starts from the date of original purchase of the product and lasts for a period of twelve (12) months unless Beko plc (the "Manufacturer") agrees to extend the guarantee for the product in writing. If you have purchased an American style Fridge freezer, the standard guarantee starts from the date of original purchase of the product, and lasts for a period of twenty four (24) months unless Beko plc (the "Manufacturer") agrees to extend the guarantee for the product in writing.

If you have any questions about the guarantee on your product (including how long it is valid), please contact your retailer or our Customer Service Team on 0333 207 9710 (UK and Northern Ireland) or 01 862 3411 (Republic of Ireland) This guarantee does not in any way diminish or affect your statutory rights in connection with the product. This guarantee is in addition to your statutory rights as a consumer. If you have any questions about these rights, please contact the retailer from which you purchased

the product. In certain circumstances, it is possible that your statutory rights may offer additional or higher levels of protection than those offered under the terms of this guarantee.

What is covered by this guarantee?

•Repairs to the product required as a result of faulty materials, defective components or manufacturingdefects.•Functional replacement parts to repair a product.

•The costs of a Beko plc Authorised Service Representative or Approved Engineer (together the “ServiceRepresentatives”) to carry out the repair.

What is not covered?

•Transit and delivery damage

•Cabinet or appearance parts, including but not limited to control knobs, flaps and handles

•Accessories and/or consumable items including but not limited to ice trays, scrapers, cutlery baskets,filters and light bulbs

•Repairs necessary as a direct or indirect result of:-Accidental damage, misuse or abuse of a product.-An attempted repair of a product by anyone other than a Service Representative.-Installation or use of a product where such installation or use fails to meet the requirementscontained in this guarantee or the User Instructions Booklet

•Repairs to a product operated at any time on commercial or non-residential household premises (unlesswe have previously agreed to the installation environment).

This guarantee is limited to the cost of repairing the product. To the extent permitted by law, the Manufacturer does not accept and will not be held liable for any financial loss incurred in connection with the failure of any product to operate in accordance with the expected standards. Such financial loss includes but is not limited to loss arising from:

•Time taken off work

•Damaged food, clothing or other items

•Meals taken at restaurants or from takeaways

•General compensation for inconvenience.

Important Notes

1.Your product is designed and built for domestic household use only.

2.The guarantee will automatically be void if the product is installed or is used in commercial or non-residential domestic household premises, unless we have previously agreed to the installationenvironment.

3.The product must be correctly installed, located and operated in accordance with the instructionscontained in the User Instructions Booklet provided with your product.

4.Professional installation by a qualified electrical domestic appliance installer is recommended for allWashing Machines, Dishwashers and Electric Cookers (as incorrect installation may result in you havingto pay for the cost of repairing the product). 48/EN

5.Gas Cookers must be professionally installed by a Gas Safe (or Gas Networks Ireland for Republic ofIreland) registered gas installer.

6.This guarantee is given in respect of products purchased and used within the United Kingdom and theRepublic of Ireland.

7.This guarantee is effective from the initial date of purchase of a new product from an authorised retailerand will be void if the product is resold.

8.This guarantee does not apply to graded sales (where the product is purchased as a “second”).

9.Possession of a copy of these terms and conditions does not necessarily mean that a product has thebenefit of this guarantee. If you have any questions, please call our Customer Service Team on thenumber set out above.

10.The Manufacturer reserves the right to terminate the guarantee if its staff or representatives aresubjected to physical or verbal abuse in the course of carrying out their duties.

11.Optional extras, where available (i.e. extendable feet) are supplied on a chargeable basis only.

Does Beko offer replacements?

This is a repair-only guarantee. On occasion, the Manufacturer may at its sole discretion, replace your product with a new product instead of carrying out a repair. Where a replacement is offered, this would normally be an identical model but when this is not possible, a model of similar specification will be provided. Subject to agreement, the Manufacturer will cover the costs and arrange for the delivery of the new product and for the return of the old product. Any costs related to disconnecting the faulty product and installing the replacement product will not be borne by the Manufacturer unless previously agreed to in writing. The original guarantee will continue to apply to the replacement product; the new product will not come with a new guarantee.

When will the repair take place?

Our Service Representatives work Monday to Friday 9.00am to 5.00pm. Appointments outside these hours may be possible at the sole discretion of the Manufacturer but cannot be guaranteed. Whilst our Service Representatives will endeavour to minimize inconvenience and to meet requests for specific timed appointments, this cannot be guaranteed. We will not be liable for delays or if it is unable to carry out a repair because a convenient appointment cannot be arranged.

Will there be any charge for the repairs?

It is your responsibility to provide evidence to the Service Representative that your product is covered by this guarantee with a proof of purchase. The Manufacturer reserves the right to charge for the reasonable cost of any service call if:

•You cannot provide evidence that your product is covered by this guarantee.

•Where a service call has been made and the Service Representative finds that there is no fault with your product.

•That your product has not been installed or operated in accordance with the User Instructions Booklet.

•That the fault was caused by something other than faulty materials, defective components ormanufacturing defects.

•For missed appointments.

Payment of these costs are due immediately upon the Service Representative providing you with an invoice. The Manufacturer reserves the right to terminate the guarantee if you fail to pay the costs for the service call in a timely manner.

If you are a resident of the United Kingdom, this guarantee will be governed by English law and subject to the exclusive jurisdiction of the English Courts, save where you live in another part of the United Kingdom, in which case the governing law and exclusive jurisdiction of the courts of that country will apply.

If you are resident in the Republic of Ireland, this guarantee will be governed by Irish law and the Irish courts will have exclusive jurisdiction. This guarantee is provided by Beko plc. Beko House, 1 Greenhill Crescent, Watford, Hertfordshire. WD18 8QU. Beko plc is registered in England and Wales with company registration number 02415578.

If you have purchased a built-in or integrated appliance, and registered it within 90 days of purchase by completing the online registration form, then the standard 12 month guarantee will be extended to 24 months, under the same terms and conditions as detailed in our Standard Guarantee Terms and Conditions.