# DE'LONGHI
## COOKING

INSTALLATION & USER INSTRUCTIONS

# PRO 965T M..
# BS 965T M..
# DTRM 905..
## DOUBLE OVEN DUAL FUEL COOKER

CE GB IE

DēLonghi

## CONTENTS

**Page Number**


Introduction . . . . . 3
Important Safety Precautions & Recommendations . . . . . 4 - 10
**Advice for the installer** . . . . . 11
Installation . . . . . 11 - 15
Gas Installation . . . . . 16 - 21
Electrical Installation . . . . . 22 - 22
**Advice for the users** . . . . . 23
Cooking Hob . . . . . 23
Control Panel . . . . . 24
Use of the Hob Burners . . . . . 25 - 29
Left Main Oven . . . . . 30 - 36
Right Oven . . . . . 37 - 41
Cooking advice . . . . . 41 - 46
Oven Temperature Guide . . . . . 47
60’ or 120’ alarm - Cut-off timer . . . . . 47 - 48
Electronic clock/programmer “Touch-control“ . . . . . 48 - 51
Cleaning & Maintenance . . . . . 51 - 62

Guarantee & After Sales Service . . . . . 63

**Dear Customer,**

*Thank you for purchasing the De'Longhi PRO 965T M.. / BS 965T M.. / DTRM 905.. double oven dual fuel cooker.*

*The safety precautions and recommendations listed below are for your own safety and that of others. They will also provide a means by which to make full use of the features offered by your appliance.*

*Please retain this booklet for future reference.*

***This appliance must be used only for the task it has explicitly been designed for, that is for cooking foodstuffs. Any other form of usage is to be considered as inappropriate and therefore potentially dangerous.***

***The manufacturer declines all responsibility in the event of damage caused by improper, incorrect or illogical use of the appliance.***

## DECLARATION OF CE CONFORMITY

- This appliance has been designed to be used only for cooking. Any other use (such as heating a room) is improper and dangerous.
- This appliance has been designed, constructed, and marketed in compliance with:
  - Safety requirements of the "Gas" Regulation (EU) 2016/426;
  - Safety requirements of the "Low voltage" Directive 2014/35/EU;
  - Safety requirements of the "EMC" Directive 2014/30/EU;
  - Requirements of EU Directive 93/68/EEC;
  - Requirements of EU Directive 2011/65/EU.

CE GB IE

## IMPORTANT INFORMATION FOR CORRECT DISPOSAL OF THE PRODUCT IN ACCORDANCE WITH EC DIRECTIVE 2012/19/EC.

At the end of its working life, the product must not be disposed of as urban waste. It must be taken to a special local authority differentiated waste collection centre or to a dealer providing this service.
Disposing of a household appliance separately avoids possible negative consequences for the environment and health deriving from inappropriate disposal and enables the constituent materials to be recovered to obtain significant savings in energy and resources. As a reminder of the need to dispose of household appliances separately, the product is marked with a crossed-out wheeled dustbin.

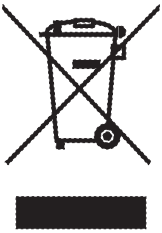

## IMPORTANT SAFETY PRECAUTIONS AND RECOMMENDATIONS

**IMPORTANT: This appliance is designed and manufactured solely for the cooking of domestic (household) food and is not suitable for any non domestic application and therefore should not be used in a commercial environment.**
**The appliance guarantee will be void if the appliance is used within a non domestic environment i.e. a semi commercial, commercial or communal environment.**

**Read the instructions carefully before installing and using the appliance.**

- This appliance has been designed and manufactured in compliance with the applicable standards for the household cooking products and it fulfills all the safety requirements shown in this manual, including those for surface temperatures.
  Some people with sensitive skin may have a more pronounced temperature perception with some components although these parts are within the limits allowed by the norms.
  The complete safety of the appliance also depends on the correct use, we therefore recommend to always pay a extreme attention while using the product, especially in the presence of children.
- After having unpacked the appliance, check to ensure that it is not damaged and that the oven door closes correctly.
  In case of doubt, do not use it and consult your supplier or a professionally qualified technician.
- Packing elements (i.e. plastic bags, polystyrene foam, nails, packing straps, etc.) should not be left around within easy reach of children, as these may cause serious injuries.
- Some appliances are supplied with a protective film on steel and aluminium parts. **This film must be removed before using the appliance.**
- IMPORTANT: The use of suitable protective clothing/gloves is recommended when handling or cleaning this appliance.
- Do not attempt to modify the technical characteristics of the appliance as this may become dangerous to use. The

manufacturer declines all responsibility for any inconvenience resulting from the inobservance of this condition.

- CAUTION: this appliance must only be installed in a permanently ventilated room in compliance with the applicable regulations.
- Do not operate your appliance by means of an external timer or separate remote-control system.
- Do not carry out cleaning or maintenance operations on the appliance without having previously disconnected it from the electric power supply.
- WARNING: Ensure that the appliance is switched off before replacing the oven lamp to avoid the possibility of electric shock.
- Do not use a steam cleaner because the moisture can get into the appliance therefore making it unsafe.
- Do not touch the appliance with wet or damp hands (or feet).
- Do not use the appliance whilst in bare feet.
- If you should decide not to use this appliance any longer (or decide to substitute another model), before disposing of it, it is recommended that it be made inoperative in an appropriate manner in accordance to health and environmental protection regulations, ensuring in particular that all potentially hazardous parts be made harmless, especially in relation to children who could play with unused appliances.
- The various components of the appliance are recyclable. Dispose of them in accordance with the regulations in force in your country. If the appliance is to be scrapped, remove the power cord.
- After use, ensure that the knobs are in the off position.
- Children less than 8 years of age shall be kept away unless continuously supervised.
- This appliance can be used by children aged from 8 years and above and persons with reduced physical, sensory or mental capabilities or lack of experience and knowledge if they have been given supervision or instruction concerning use of the appliance in a safe way and understand the hazards involved. Children shall not play with the appliance. Cleaning and user maintenance shall not be made by children without supervision.

- The manufacturer declines all liability for injury to persons or damage to property caused by incorrect or improper use of the appliance.
- WARNING: During use the appliance and its accessible parts become hot; they remain hot for some time after use.
  - Care should be taken to avoid touching heating elements (on the hob and inside the oven).
  - The door is hot, use the handle.
  - To avoid burns and scalds, young children should be kept away.
- Make sure that electrical cables connecting other appliances in the proximity of the cooker cannot come into contact with the hob or become entrapped in the oven door.
- WARNING: Unattended cooking on a hob with fat or oil can be dangerous and may result in fire. NEVER try to extinguish a fire with water, but switch off the appliance and then cover flame e.g. with a lid or a fire blanket.
- WARNING: Danger of fire: do not store items on the cooking surfaces.
- WARNING: When correctly installed, your product meets all safety requirements laid down for this type of product category. However special care should be taken around the rear or the underneath of the appliance as these areas are not designed or intended to be touched and may contain sharp or rough edges, that may cause injury.
- FIRST USE OF THE OVEN - it is advised to follow these instructions:
  - Furnish the interior of the oven as described in the chapter “CLEANING AND MAINTENANCE”.
  - Switch on the empty oven on max to eliminate grease from the heating elements.
  - Disconnect the appliance from the electrical power supply, let the oven cool down and clean the interior of the oven with a cloth soaked in water and neutral detergent; then dry carefully.

- CAUTION: Do not use harsh abrasive cleaners or sharp metal scrapers to clean the oven door glass since they can scratch the surface, which may result in shattering of the glass.
- Do not line the oven walls or base with aluminium foil. Do not place baking trays or the drip tray on the base of the oven chamber.
- Do not cover the hob with aluminium foils.
- FIRE RISK! Do not store flammable material in the oven or in the storage compartment.
- Always use oven gloves when removing the shelves and food trays from the oven whilst hot.
- Do not hang towels, dishcloths or other items on the appliance or its handle – as this could be a fire hazard.
- Clean the oven regularly and do not allow fat or oils to build up in the oven base or tray. Remove spillages as soon as they occur.
- Do not stand on the cooker or on the open oven door.
- Always stand back from the appliance when opening the oven door to allow steam and hot air to escape before removing the food.
- SAFE FOOD HANDLING: Leave food in the oven for as short a time as possible before and after cooking. This is to avoid contamination by organisms which may cause food poisoning. Take particular care during warmer weather.
- WARNING: Take care NOT to lift the cooker by the door handle.
- CAUTION: The cooking process has to be supervised. A short term cooking process has to be supervised continuously.
- The appliance must not be installed behind a decorative door in order to avoid overheating.
- The oven accessories (e.g. oven wire rack) must be fitted correctly as indicated at page 55.
- IMPORTANT NOTE: The oven shelves (for some products one shelf only is provided) have not been designed to place the food directly on the shelf itself. When cooking, always place the food in special containers or use specific materials suitable for the food contact.

- If the power supply cable is damaged, it must be replaced only by an authorized service agent in order to avoid a hazard.
- If the appliance is not fitted with a supply cord and a plug, or with other means for disconnection from the supply mains having a contact separation in all poles that provide full disconnection under overvoltage category III conditions, means for disconnection must be incorporated in the fixed wiring in accordance with the wiring rules.
- WARNING: The appliance and its accessible parts become hot during use.
  Care should be taken to avoid touching heating elements.
  Children less than 8 years of age shall be kept away unless continuously supervised.
- WARNING: Use only hob guards designed by the manufacturer of the cooking appliance or indicated by the manufacturer of the appliance in the instructions for use as suitable or hob guards incorporated in the appliance. The use of inappropriate guards can cause accidents.

## ENERGY LABELLING/ECODESIGN

- Commission delegated regulation (EU) No 65/2014 (supplementing Directive 2010/30/EU of the European Parliament and of the Council).
- Commission regulation (EU) No 66/2014 (implementing Directive 2009/125/EC of the European Parliament and of the Council).

Reference to the measurement and calculation methods used to establish compliance with the above requirements:

- Standard EN 60350-1 (electric ovens).
- Standard EN30-2-1 (hobs: gas fired burners).

## USE OF THE APPLIANCE, ENERGY SAVING TIPS

### OVEN

- Check the oven door always closes properly and the door gasket is clean and in order. During use, open the oven door only when strictly necessary to avoid heat losses (for some functions it may be necessary to use the oven with the door half-closed, check the oven operating instructions).
- Turn off the oven 5-10 minutes before the end of the theoretical cooking time to recuperate the stored heat.
- We recommend using oven proof dishes and adjusting the oven temperature during cooking if necessary.

### HOB

### GAS FIRED BURNERS

- It is important that the diameter of the pot be suitable to the potentiality of the burner so as not to compromise the high output of the burners and therefore energy waste. A small pot on a large burner does not give you a boiling point in a shorten amount of time since the capacity of heat absorption of a liquid mass depends on the volume and the surface of the pot.
- Avoid keeping a burner on without something on it (without pot).

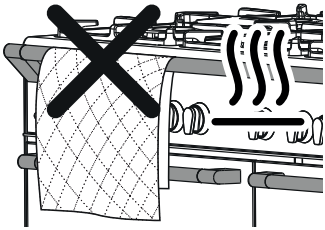

## WARNING – VERY IMPORTANT!

**FIRE/OVERHEATING HAZARD:**

- Do not place towels/cloths etc. onto the hob rail or oven door handle/s whilst the product is in use or hot.

**TO AVOID DAMAGE TO THE APPLIANCE:**

- Do not lift/move the cooker by the hob rail or oven door handle/s.
- Do not lean on the hob rail or oven door handle/s.

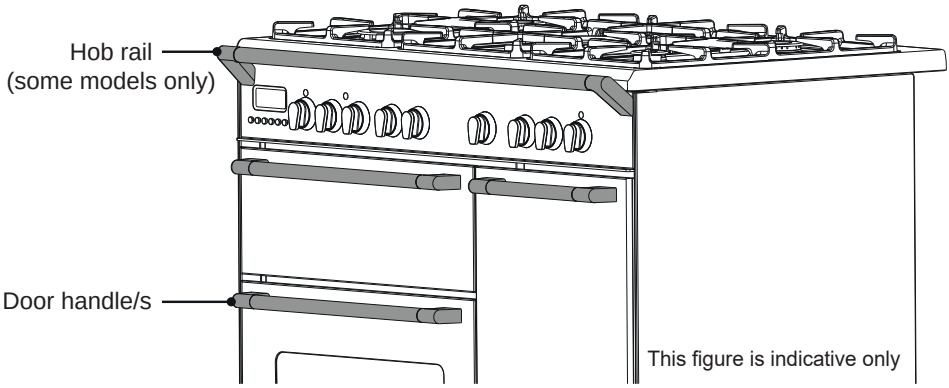

# Advice for the installer

## 1 INSTALLATION

### IMPORTANT

- The appliance is designed and approved for domestic use only and should not be installed in a commercial, semi commercial or communal environment, in Motorhomes, Caravans (except Static/Park Homes), or any boat or vessel used on the sea, estuary, lakes or inland waterways.
  **Your product will not be guaranteed if installed in any of the above environments and could affect any third party or public liability insurances you may have.**
  The appliance may be installed in a kitchen, kitchen/diner or a bed sitting room, but not in a room or space containing a bath or a shower without first consulting current regulations.
  The appliance must not be installed in a bed-sitting room of less than 20 $m^3$.
- Cooker installation must only be carried out by a **SUITABLY QUALIFIED AND REGISTERED TECHNICIAN** and in compliance with local safety standards.
  Failure to observe this rule will invalidate the warranty.
- The appliance must be installed in compliance with regulations in force in your country and in observation of the manufacturer's instructions.
- Always disconnect the appliance from the power supply before carrying out any maintenance operations or repairs.
- Take care NOT to lift the oven by the door handle/s.
- Some appliances are supplied with a protective film on steel and aluminium parts.
  **This film must be removed before using the cooker.**
- **Important: The use of suitable protective clothing/gloves is recommended when handling or installing this appliance.**
- **The walls of the units must not be higher than work top and must be capable of resisting temperatures of 70 °C above room temperature.**
- **We would point out that the adhesive which bonds the plastic laminate to the furniture must withstand temperatures not less than 150 °C to avoid delamination.**
- **Do not install the appliance near inflammable materials (e.g. curtains).**

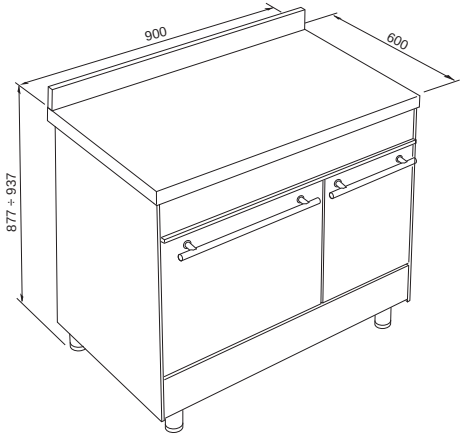


**WARNING**
**When correctly installed, your product meets all safety requirements laid down for this type of product category.**
**However special care should be taken around the rear or the underneath of the appliance as these areas are not designed to be touched and may contain sharp or rough edges, that may cause injury.**

**This cooker has class “2/1” overheating protection so that it can be installed next to a cabinet.**

If the cooker is installed adjacent to furniture which is higher than the gas hob cooktop, a gap of at least 200 mm must be left between the side of the cooker and the furniture.

The walls and kitchen furniture surrounding the appliance must be made of non-flammable material. The veneered synthetic material and the glue used must be resistant to a temperature of 150 °C in order to avoid ungluing or deformations. It is recommended that a 10 mm gap to each side is made if the adjacent kitchen furniture is made of a plastic laminate wrap.

Curtains must not be fitted immediately behind appliance or within 500 mm of the sides.

It is essential that the cooker is positioned as stated below.

We do not recommend the cooker is located on a plinth. If this is unavoidable, it will be necessary to provide safety measures to prevent the appliance falling off.

**The cooker must be installed by a suitably qualified technician and in compliance with local safety standards.**

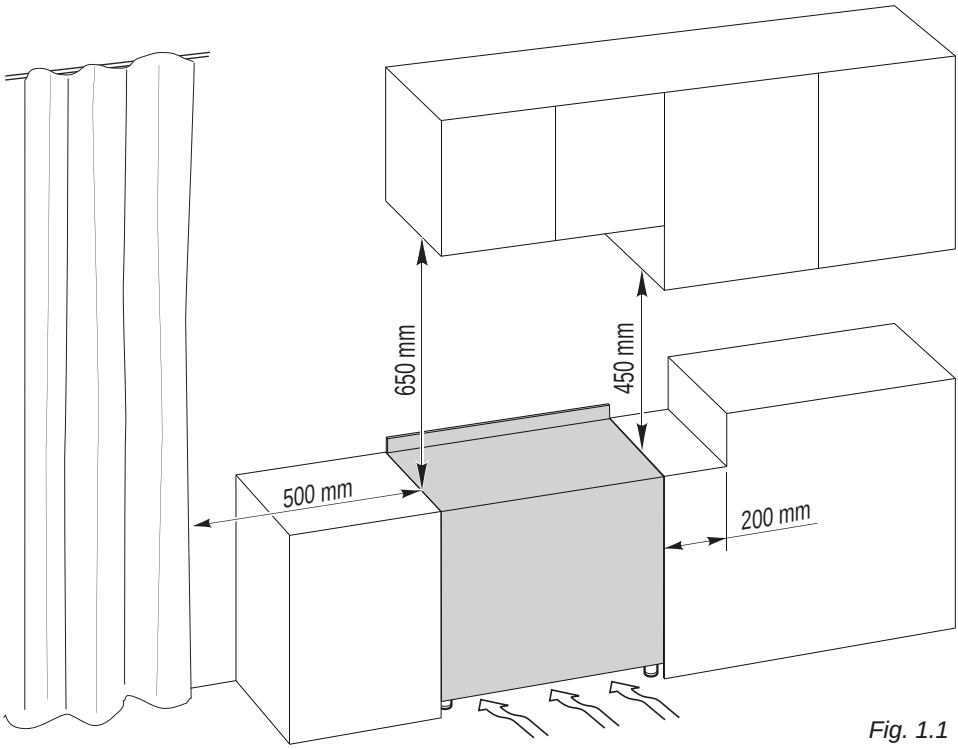


*Fig. 1.1*

## FITTING THE ADJUSTABLE FEET

The adjustable feet must be fitted to the base of the cooker before use (fig. 1.2).
Rest the rear of the cooker on a piece of the polystyrene packaging exposing the base for the fitting of the feet.
Fit the 4 legs by screwing them tight into the support base as shown in figure 1.3.

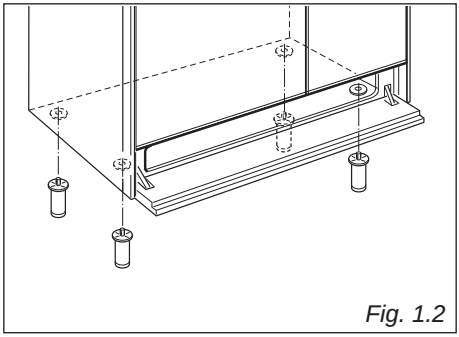

*Fig. 1.2*

## LEVELLING THE COOKER

The cooker may be levelled by screwing the lower ends of the feet IN or OUT (fig. 1.4).

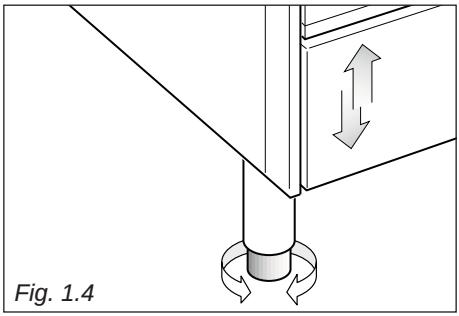

*Fig. 1.4*

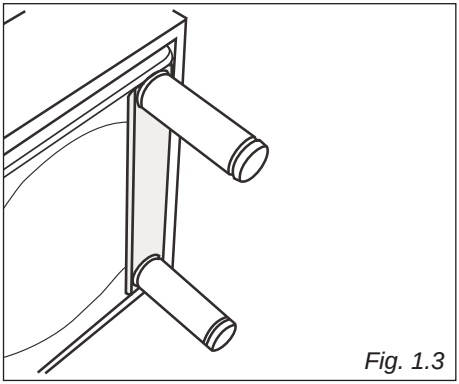

*Fig. 1.3*

## BACKGUARD (some models only)

Before installing the cooker, assemble the backguard "**C**" (fig. 1.5).

- The backguard "**C**" can be found packed at the rear of the cooker.
- Before assembling remove any protective film/ adhesive tape.
- Remove the two spacers "**A**" and the screw "**B**" from the rear of the cooktop.
- Assemble the backguard as shown in figure 1.5 and fix it by screwing the central screw "**B**" and the spacers "**A**".

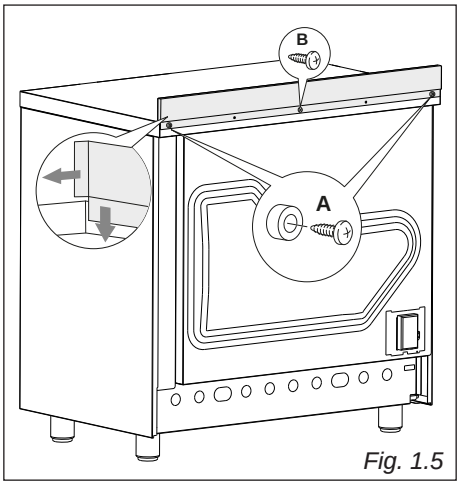


*Fig. 1.5*

## MOVING THE COOKER

**WARNING: When raising cooker to upright position always ensure two people carry out this manoeuvre to prevent damage to the adjustable feet (fig. 1.6).**

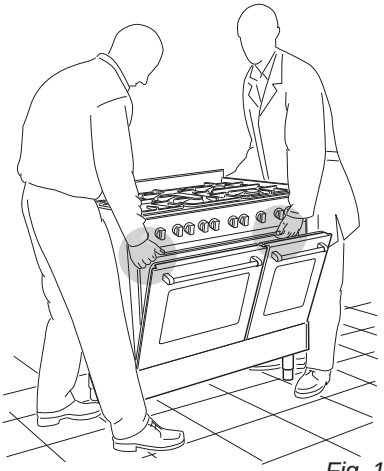

*Fig. 1.6*

## WARNING

**Be careful: do not lift the cooker by the door handle when raising to the upright position (fig. 1.7).**

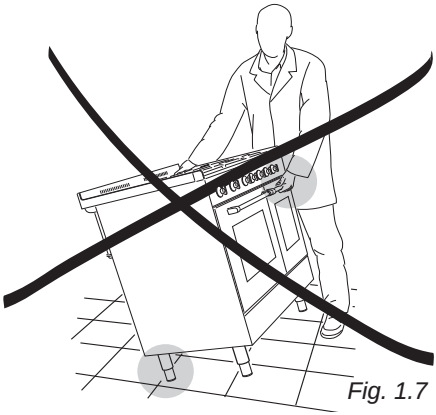

*Fig. 1.7*

## WARNING

**When moving cooker to its final position DO NOT DRAG (fig.1.8).**
**Lift feet clear of floor (fig. 1.6).**

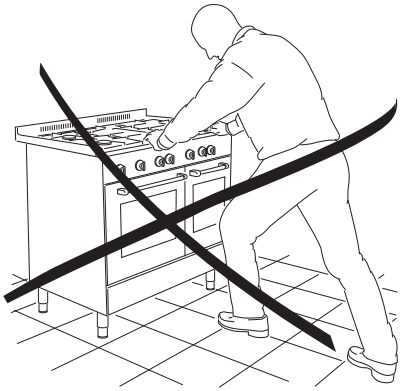

*Fig. 1.8*

**IMPORTANT (only for some models): When handling the oven, take care not to damage the door sensor lever "L" (fig. 1.9) (near the top left corner of the oven seal in the left oven, and near the top right corner of the oven seal in the right oven).**

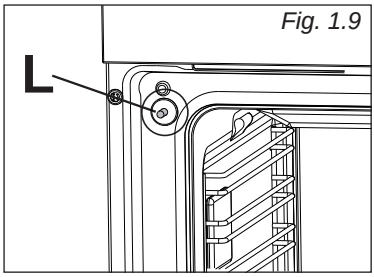


*Fig. 1.9*

## ANTI-TILT BRACKET

**Important!**

**To restrain the appliance and prevent it tipping accidentally, fit the supplied bracket to the rear wall to fix it securely.**

To fit the anti-tilt bracket:

1. After you have located where the cooker is to be positioned, mark on the wall the place where the two screws of the anti-tilt bracket have to be fitted.
   Please follow the indications given in fig. 1.10.
2. Drill two 8 mm diameter holes in the wall and insert the plastic plugs supplied.
   **Important!**
   **Before drilling the holes, check that you will not damage any pipes or electrical wires.**
3. Loosely attach the anti-tilt bracket with the two screws supplied.
4. Move the cooker to the wall and adjust the height of the anti-tilt bracket so that it can engage in the slot on the cooker's back, as shown in fig. 1.10.
5. Tighten the screws attaching the anti-tilt bracket.
6. Push the cooker against the wall so that the anti-tilt bracket is fully inserted in the slot on the cooker's back.
   **Attention!**
   **When sliding the cooker into place pay special attention not to trap the power supply cable in the stability bracket.**
   **Pay special attention to the gas connection hose.**

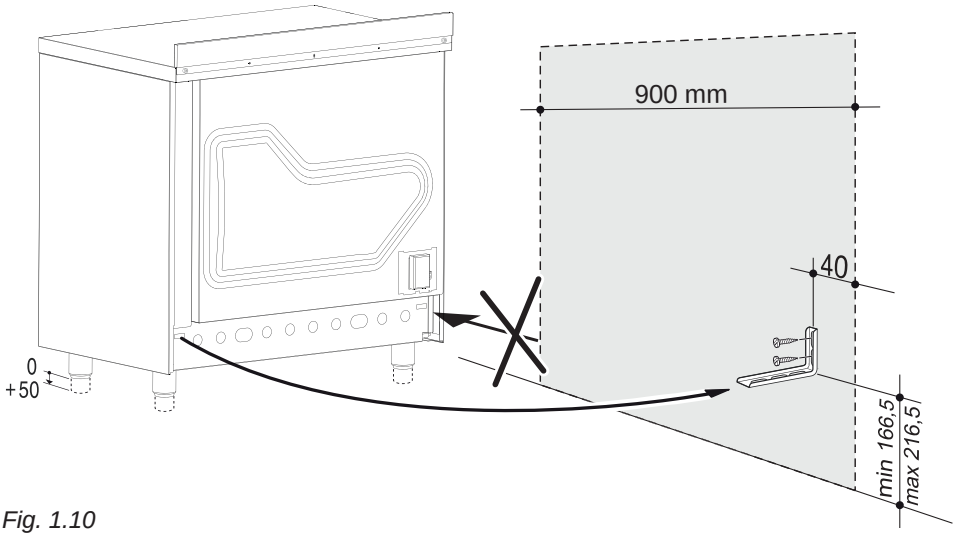


*Fig. 1.10*

## PROVISION FOR VENTILATION

- The appliance should be installed into a room or space with an air supply in accordance with the current version of BS 5440-2: 2000.
- For rooms with a volume of less than 5m$^3$ - permanent ventilation of 100 cm$^2$ free area must be provided.
- For rooms with a volume of between 5 m$^3$ and 10 m$^3$ a permanent ventilation of 50 cm$^2$ free area will be required unless the room has a door which opens directly to the outside air in which case no permanent ventilation is required.
- For rooms with a volume greater than 10 m$^3$ - no permanent ventilation is required.

**Note: Regardless of room size, all rooms containing the appliance must have direct access to the outside air via an openable window or equivalent.**

- Where there are other fuel burning appliances in the same room, the current version of BS 5440-2: 2000 should be consulted to determine the correct amount of free area ventilation requirements.
- The above requirements allow also for use of a gas oven and grill but if there are other gas burning appliances in the same room, consult a qualified engineer.

# 2 GAS SECTION

## IMPORTANT NOTE

This appliance is supplied for use on NATURAL GAS or LPG (check the gas regulation label attached on the appliance).

- Appliances supplied for use on NATURAL GAS are adjusted for this gas only and cannot be used on any other gas (LPG) without modification. The appliances are manufactured for conversion to LPG.
- Appliances supplied for use on LPG are adjusted for this gas only and cannot be used on any other gas (NATURAL GAS) without modification. The appliances are manufactured for conversion to NATURAL GAS.

If the NATURAL GAS/LPG conversion kit is not supplied with the appliance this kit can be purchased by contacting the After-Sales Service.

## INSTALLATION & SERVICE REGULATIONS (UNITED KINGDOM)

It is a legal requirement that all gas appliances are Installed & Serviced by a competent person in accordance with the current editions of the following Standards & Regulations or those regulations appropriate to the geographical region in which they are to be installed:

- Gas Safety (Installation & Use) Regulations
- Building Regulations
- British/European Standards
- Regulations for Electrical Installation

Installation and service of any gas product must be made by a suitably qualified and registered person competent on the type of product being installed or serviced and holding a valid certificate of competence for the work being carried out. Currently the proof of competence is the Accredited Certification Scheme (ACS) or N/SVQ that has been aligned to the ACS.

It is also a requirement that all businesses or self employed installers are members of a class of person approved by the Health and Safety Executive.

Failure to install the appliance correctly could invalidate any manufacturer's warranty and lead to prosecution under the above quoted regulations.

## GAS CONNECTION

GB

IE

**Cat: II 2H 3+**

It is a requirement that a restraining chain (not supplied with the appliance) is also used to prevent stress being applied to the gas hose or pipework. The chain should be attached securely to the product and on the wall (fig. 2.1).

### Installation to Natural Gas

Installation to Natural Gas must conform to the Code of Practice, etc.
The supply pressure for Natural Gas is 20 mbar.
The installation must conform to the relevant British/European Standards.

### Installation to LP Gas

When operating on Butane gas a supply pressure of 28-30 mbar is required.
When using Propane gas a supply pressure of 37 mbar is required.
The installation must conform to the relevant British/European Standards.

**Warning:** Only a suitably qualified and registered installer, also with technical knowledge of electricity should install the appliance.
He should observe the Regulations and Codes of Practice governing such installation of gas appliances.
Note: It is recommended that the gas connection to the appliance is installed with a flexible hose connecting tube made to BS669 or EN 14800.

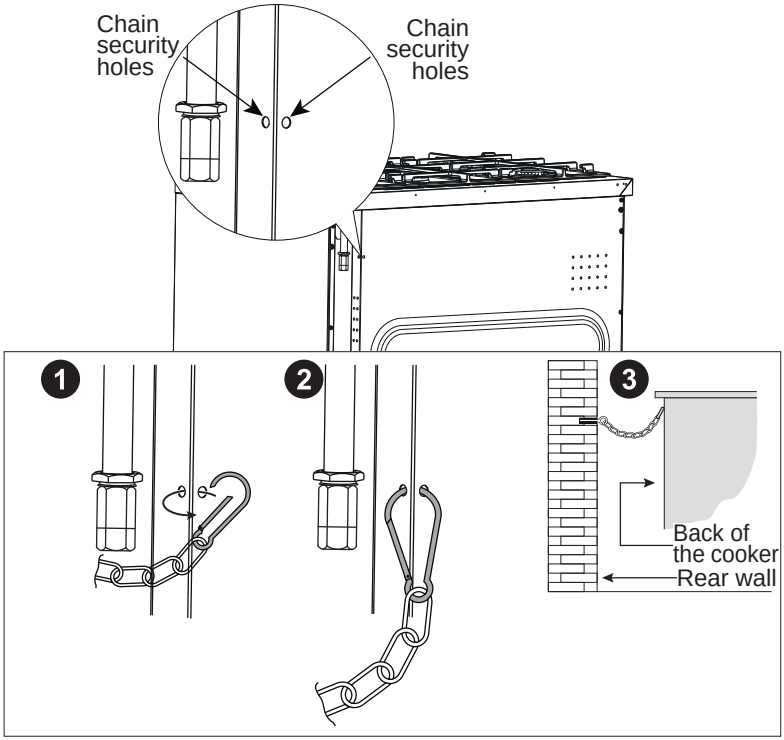

*Fig. 2.1*

## Notes:

- **Flexible hoses can be used where the sited ambient temperature of the hose does not exceed 70 °C. These hoses must be manufactured in accordance with BS669 part 1 or EN 14800 and be of the correct construction for the type of gas being used.**
- **Gas hoses designed for natural gas MUST NOT be used for supplying LPG gas (LPG gas hoses can be identified by a either a red band or stripe on the rubber outer coating of the hose).**
  **The hose should not be crushed or trapped or be in contact with sharp or abrasive edges.**

**IMPORTANT! It is the responsibility of the gas installer to ensure that the product is fully tested and commisioned in accordance with current regulations to ensure there are no gas escapes.**

## Gas connection (figs. 2.2a, 2.2b, 2.3, 2.4)

- The gas supply must use the gas inlet pipe which is located at the left hand side at the rear of the appliance.
- **IMPORTANT NOTE:** Before connecting the appliance to the gas mains fit the female connector (supplied with the appliance in a separate kit) to the inlet pipe using the fibre washer supplied.
- **IMPORTANT: Check the correct positioning of the connector as per pictures and always operate using two suitable spanners.**
- The pipe does not cross the rear panel of the cooker. In case of crossing the back panel, ensure the pipe is positioned close to the bottom part of the appliance.
- The hose should not be crushed or trapped or be in contact with sharp or abrasive edges. It should also not be subjected to corrosion by acidic cleansing agents.
  The hose should also be connected in such away that it does not touch the floor and must hang in a natural loop between the appliance and the bayonet fitting.
- To avoid damage to the appliance gas rail inlet pipe the fittings should be tightened using two suitable spanners.

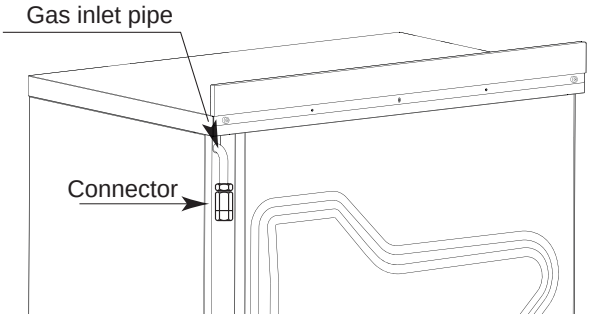


*Fig. 2.2a*

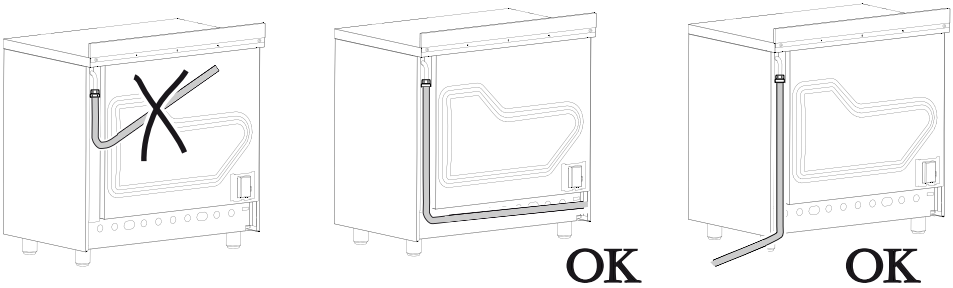


*Fig. 2.2b*

*Fig. 2.3*

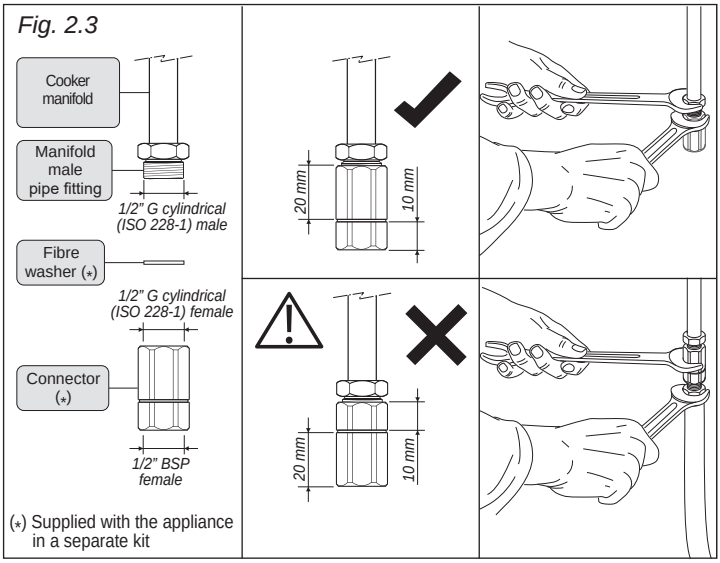


(*) Supplied with the appliance in a separate kit

## IMPORTANT PRESCRIPTIONS FOR GAS CONNECTION

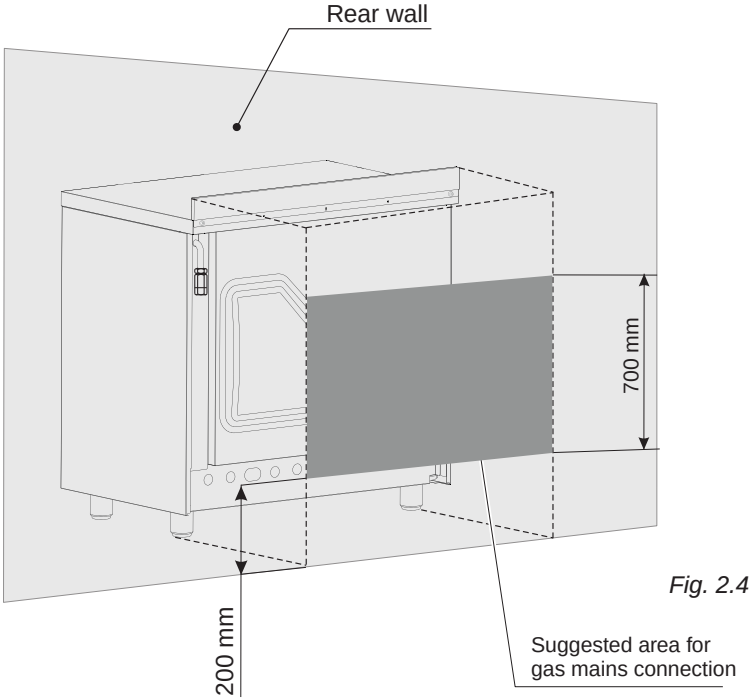


*Fig. 2.4*

# Conversion to Natural Gas or to LPG

## REPLACEMENT OF THE INJECTORS OF THE TOP BURNERS

**If the injectors are not supplied they can be obtained from the After-Sales Service.**

Select the injectors to be replaced according to the "Table for the choice of the injectors".

The nozzle diameters, expressed in hundredths of a millimetre, are marked on the body of each injector.

To replace the injectors proceed as follows:

- Remove pan supports and burners from the cooktop.
- Using a wrench, substitute the nozzle injectors "**J**" (figs. 2.5, 2.6, 2.7) with those most suitable for the kind of gas for which it is to be used.

**The burners are conceived in such a way so as not to require the regulation of the primary air.**

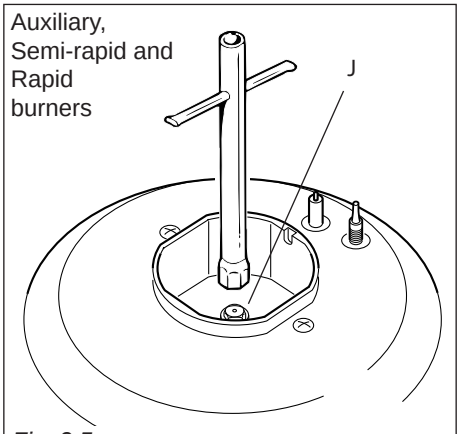


*Fig. 2.5*

## ADJUSTING OF THE MINIMUM OF THE TOP BURNERS

In the minimum position the flame must have a length of about 4 mm and must remain lit even with a quick turn from the maximum position to that of minimum.

The flame adjustment is done in the following way:

- Turn on the burner.
- Turn the tap to the MINIMUM position.
- Take off the knob.
- With a thin screwdriver turn the screw "**A**" until adjustment is correct (fig. 2.8).
- **Dual burner:** For the dual burner set the minimum (as indicated above) for both the gas valves (one for the inner and one for the outer ring). The operations must be carried out one gas valve at a time.

**Normally for LPG, tighten up the regulation screw.**

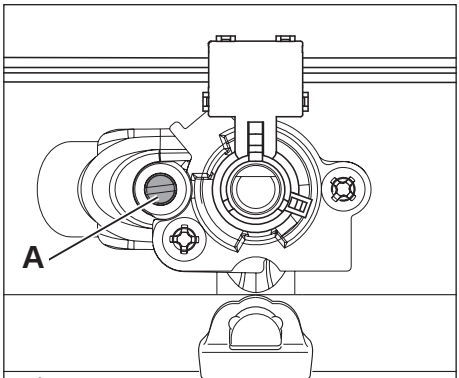


*Fig. 2.8*

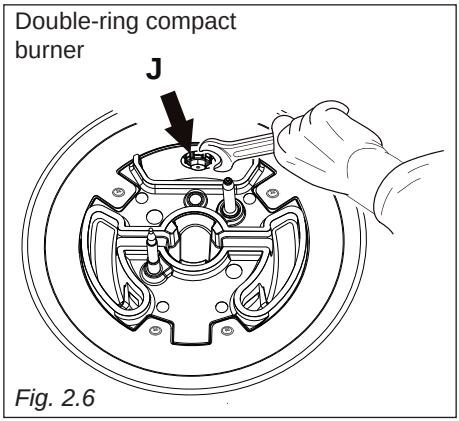


*Fig. 2.6*

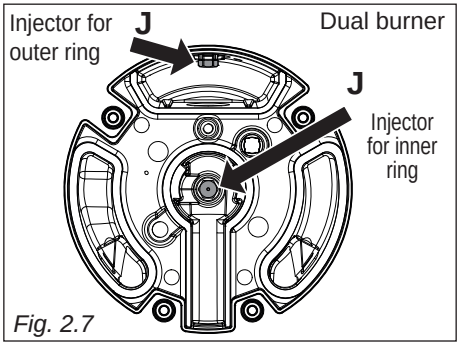


*Fig. 2.7*

## TABLE FOR THE CHOICE OF THE INJECTORS

GB IE **Cat: II 2H3+**

| BURNERS | | Nominal power [kW] | Reduced power [kW] | **LPG** G30 28-30 mbar G31 37 mbar | **Natural Gas** G20 20 mbar |
|---|---|---|---|---|---|
| | | | | Ø injector [1/100 mm] | Ø injector [1/100 mm] |
| Auxiliary (A) | | 1,00 | 0,40 | 50 | 72 (X) |
| Semi-rapid (SR) | | 1,75 | 0,45 | 65 | 97 (Z) |
| Rapid (R) | | 3,00 | 0,75 | 85 | 128 (H3) |
| Double-ring compact (DCC) | | 4,00 | 1,50 | 100 | 150 (H3) |
| Dual (D) | inner crown | 0,80 | 0,40 | 44 | 68 (H1) |
| | outer crown | 4,20 (3,80 at G30/G31 | 1,50 | 98 | 155 (H3) |

| AIR VENT NECESSARY FOR GAS COMBUSTION = (2 $m^3$/h x kW) | | |
|---|---|---|
| BURNERS | | Air necessary for combustion [$m^3$/h] |
| Auxiliary (A) | | 2,00 |
| Semi-rapid (SR) | | 3,50 |
| Rapid (R) | | 6,00 |
| Double-ring compact (DCC) | | 8,00 |
| Dual (D) | inner crown | 1,60 |
| | outer crown | 8,40 (7,60 at G30/G31) |
| | inner & outer crown | 10,00 (9,20 at G30/G31) |

## LUBRICATION OF THE GAS TAPS

- In case of difficulty in the gas taps operation, call Service.

**IMPORTANT**
**All intervention regarding installation maintenance of the appliance must be fulfilled with original factory parts.**
**The manufacturer declines any liability resulting from the non-compliance of this obligation.**

# 3 ELECTRICAL SECTION

**IMPORTANT: The appliance must be installed in accordance with the manufacturer's instructions. Incorrect installation, for which the manufacturer accepts no responsibility, may cause damage to persons, animals and property.**

**The connection of the appliance to earth is mandatory. The manufacturer declines all responsibility for any inconvenience resulting from the inobservance of this condition.**

**Before carrying out any work on the electrical parts of the appliance, the appliance must be disconnected and locked off from the mains.**

The appliance must be connected to the electrical network verifying that the voltage corresponds to the value indicated on the specifications plate and that the cables section of the electrical wiring can bear the load which is indicated on the rating plate.
We recommend that the appliance is connected by a suitably qualified person who will comply with the current IEE and local regulations.

It is recomended that the appliance is connected via a dedicated cooker circuit using a double pole cooker switch with a rating equal or greater than the total loading of the cooker, with a minimum opening between the contacts of 3 mm.

Alternative connection methods may be available as long as they conform to current IEE wiring regulations.

The power supply cable must not touch the hot parts and must be positioned so that it does not exceed 50 °C at any point.

Once the cooker has been installed, the switch must always be easily accessible within 2 metres.

## ELECTRICAL FEEDER CABLE CONNECTION

**WARNING: If the power supply cable is damaged, it must be replaced only by an authorised service agent in order to avoid a hazard.**

To connect the supply cable:

- Remove the screws that holds shield "**A**" behind the cooker (fig. 3.1).
- Insert the feeder cable of the suitable section (as described in the next chapter) into the cable clamp "**C**".
- Connect the wires to the terminal block "**B**" according to the diagram in figure 3.2.
- Pull the feeder cable and secure it with cable clamp "**C**".
- Re-mount shield "**A**".

**NOTE: The earth conductor must be left about 3 cm longer than the others.**

**IMPORTANT: To connect the power supply cable DO NOT unscrew the screws fixing the cover plate behind the terminal block.**

## POWER SUPPLY

220-240 V 50/60 Hz 4850 W

## FEEDER CABLE SPECIFICATIONS
## Type "H05RR-F"

220-240 V ac 3 x 2,5 $mm^2$ (*)

(*) Connection with wall box connection.

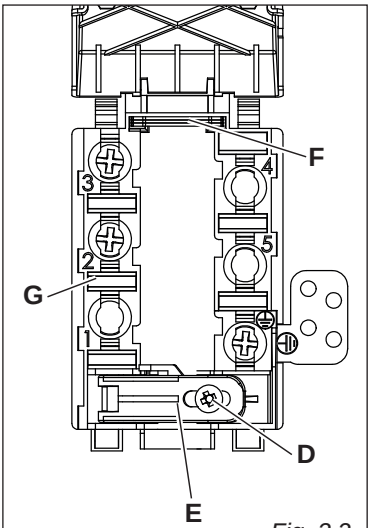

*Fig. 3.2*

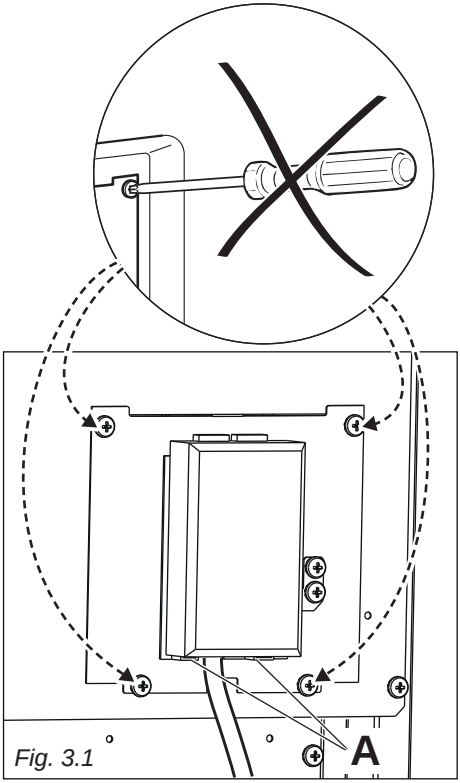

*Fig. 3.1*

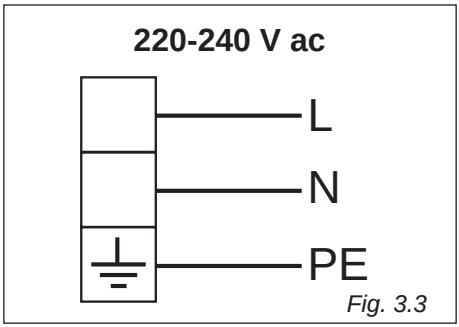

*Fig. 3.3*

# Advice for the installer

## 1 COOKING HOB

*Fig. 1.1*

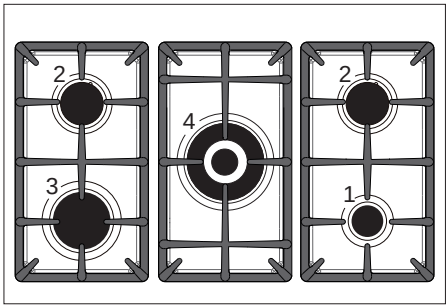


*Fig. 1.2*

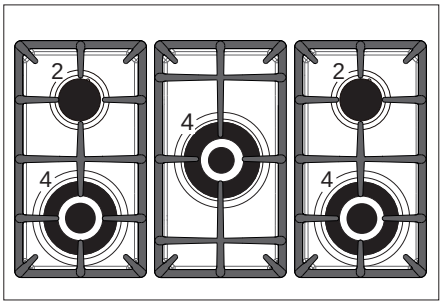


*Fig. 1.3*

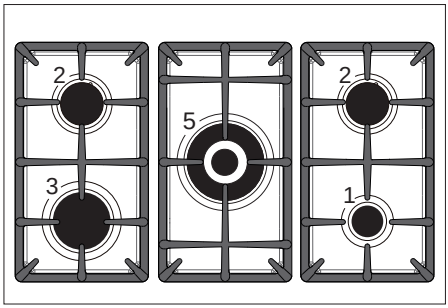


*Fig. 1.4*

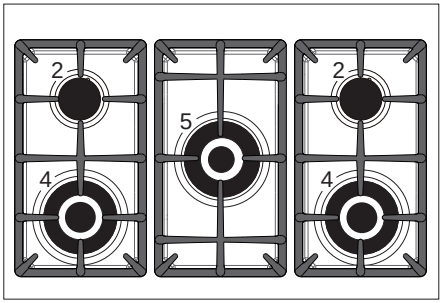


*Fig. 1.5*

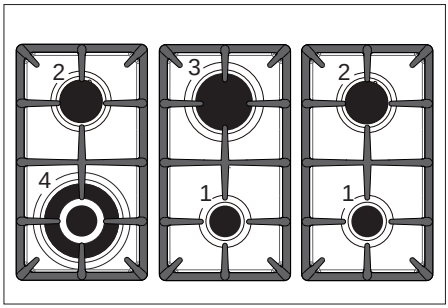


### GAS BURNERS

| | |
|---|---|
| 1. Auxiliary burner (A) | 1,00 kW |
| 2. Semi-rapid burner (SR) | 1,75 kW |
| 3. Rapid burner (R) | 3,00 kW |
| 4. Double-ring compact burner (DCC) | 4,00 kW |
| 5. Dual burner (D) (*) | 5,00 kW |

**CAUTION: Do not cover the hob with aluminium foils.**

**(*)** **IMPORTANT: The Dual burner is controlled by two separate knobs; one knob for the inner ring only and one knob for the outer ring only.**
**The inner and outer ring can be used together or separately.**

**After using the dual burner check both the control knobs are in the closed " ● " (off) position.**

## Notes:

- The electric ignition is incorporated in the knobs.
- The appliance has a safety valve system fitted, the flow of gas will be stopped if and when the flame should accidentally go out.

## CAUTION:

If the burner is accidentally extinguished, turn the gas off at the control knob and wait at least 1 minute before attempting to relight.

## CAUTION:

Gas hobs produce heat and humidity in the environment in which they are installed.
Ensure that the cooking area is well ventilated by opening the natural ventilation grilles or by installing an extractor hood connected to an outlet duct that vents to the outside.

## CAUTION:

If the hob is used for a prolonged time it may be necessary to provide further ventilation by opening a window or by increasing the suction power of the extractor hood if fitted and vented to the outside.

# 2 CONTROL PANEL

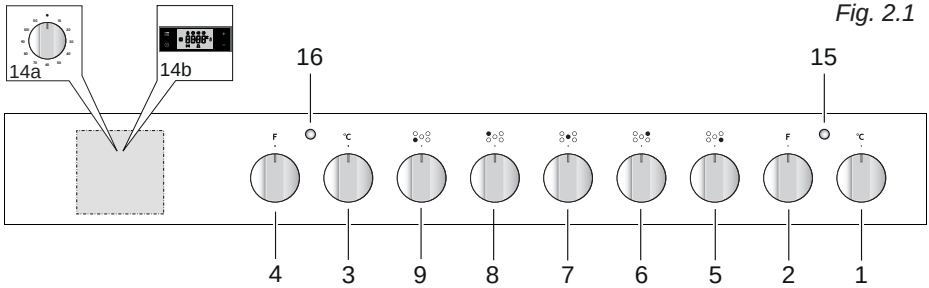


*Fig. 2.1*

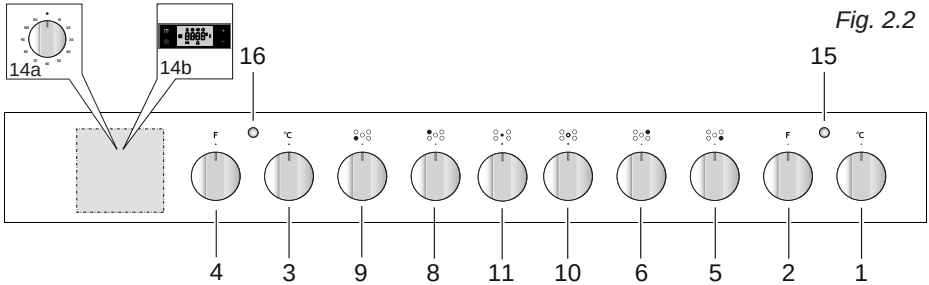


*Fig. 2.2*

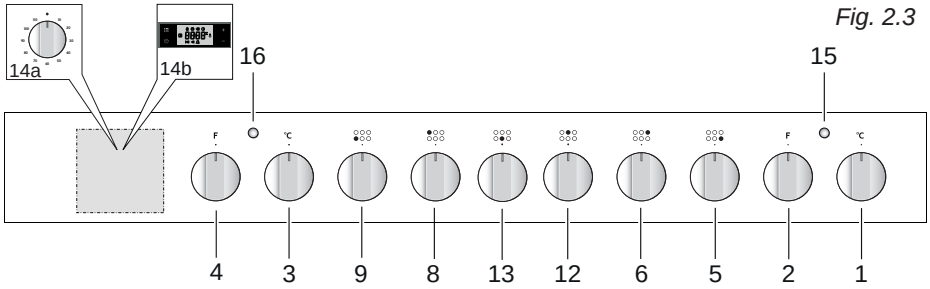


*Fig. 2.3*

## CONTROLS DESCRIPTION

1. Right oven thermostat knob
2. Right oven switch knob
3. Left oven thermostat knob
4. Left oven switch knob
5. Front right burner control knob
6. Rear right burner control knob
7. Central burner control knob
8. Rear left burner control knob
9. Front left burner control knob
10. Dual burner control knob (outer ring only)
11. Dual burner control knob (inner ring only)
12. Rear central burner control knob
13. Front central burner control knob
14. Depending on the model:
    a. Alarm (60 or 120 minutes) control knob or cut-off timer control knob
    b. Electronic clock/programmer “Touch-control”
15. Right oven thermostat indicator light
16. Left oven thermostat indicator light (some models only)

**NOTE:**
**The knob and symbols may vary.**
**The symbols may be printed on the knob itself or on the control panel.**

**Please note:** This appliance incorporates a safety cooling fan which you will hear operating whenever the oven or grill is being used.
The cooling fan may even run on after the appliance has been switched off.
The duration of this time is dependent on several factors, including previous cooking temperature, duration and ambient temperature. Times in excess of 30 minutes are not uncommon.

# 3 USE OF HOB BURNERS

## GAS BURNERS

Gas flow to the burners is adjusted by turning the knobs (illustrated in fig. 3.1) which control the safety valves. Turning the knob, so that the indicator line points to the symbols printed on the panel, achieves the following functions:

- symbol ● closed valve
- symbol maximum aperture or flow
- symbol minimum aperture or flow

√ The maximum aperture position permits rapid boiling of liquids, whereas the minimum aperture position allows slower warming of food or maintaining boiling conditions of liquids.

√ To reduce the gas flow to minimum rotate the knob further anti-clockwise to point the indicator towards the small flame symbol.

√ Other intermediate operating adjustments can be achieved by positioning the indicator between the maximum and minimum aperture positions, and never between the maximum aperture and closed positions.

**Caution!**
**Do not cover the hob with aluminium foils.**

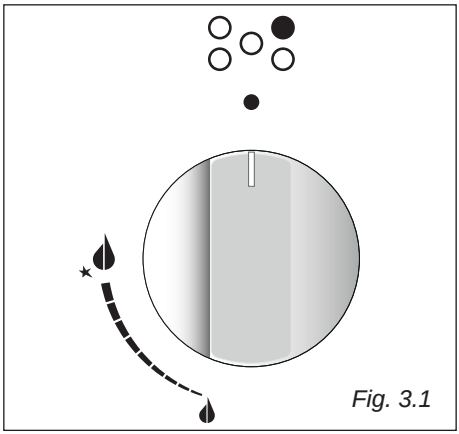

*Fig. 3.1*

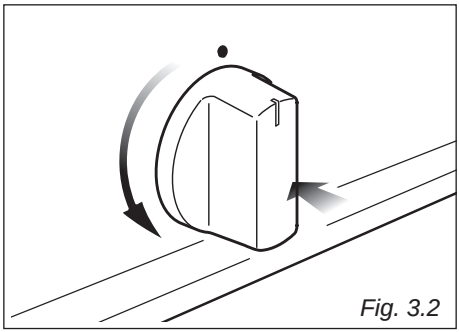

*Fig. 3.2*

**NOTE:**
**The knob and symbols may vary.**

**Caution!**
**The cooking hob becomes very hot during operation.**
**Keep children well out of reach.**

**N.B. When the cooker is not being used, set the gas knobs to their closed positions.**

## LIGHTING THE BURNERS

To ignite the burner, the following instructions are to be followed:

1. Press in the corresponding knob and turn counter-clockwise (fig. 3.2) to the full flame position marked by the ★ symbol (fig. 3.1); hold the knob in unt il the flame has been lit.
   In the case of a mains failure light the burner with a match or lighted taper.
2. Wait for a few seconds after the gas burner has been lit before letting go of the knob (valve activation delay).
3. Adjust the gas valve to the desired position.

If the burner flame should go out for some reason, the safety valve will automatically stop the gas flow.
To re-light the burner, return the knob to the closed ● **position, wait for at least 1 minute** and then repeat the lighting procedure.

If your local gas supply makes it difficult to light the burner with the knob set to maximum, set the knob to minimum and repeat the operation.

## DUAL BURNER

The Dual Burner is a very flexible burner which allows different regulations and optimal cooking.
It is composed by one inner and one outer crown: **the inner and outer crown can be used together or separately**.

The Dual burner is **controlled by two separate knobs:**

- one knob for the inner crown only (“ ● ” symbol identifying the control knob);
- one knob for the outer crown only “○” symbol identifying the control knob).

The Dual burner can be used:

- as a small burner (flame produced only by the inner crown);
- as an Ultra-rapid burner (flame produced only by the outer crown);
- as a high-power burner (all flames produced simultaneously by inner and outer crown).

**IMPORTANT: After using the dual burner check both the control knobs are in the closed “ ● ” position.**

## DEEP FAT FRYING

For safety purposes when deep fat frying, do not fill the pan more than one third full of oil.
DO NOT cover the pan with a lid and DO NOT leave the pan unattended.
In the unfortunate event of a fire, leave the pan where it is and turn off the control knobs.
Place a damp cloth or lid over the pan to smother the flames. Leave the pan to cool for at least 30 minutes before moving the pan.
DO NOT USE WATER ON THE FIRE.

## CHOICE OF THE BURNER

On the control panel, near every knob there is a diagram that indicates which burner is controlled by that knob.
The suitable burner must be chosen according to the diameter and the capacity used.
The burners and pans must be used in accordance with the following instructions:

| DIAMETERS OF PANS WHICH MAY BE USED ON THE BURNERS | | | |
|---|---|---|---|
| **BURNERS** | | **MINIMUM** | **MAXIMUM** |
| Auxiliary (with 'closed' prongs of pan support) | | 6 cm | 14 cm |
| Auxiliary (with 'open' prongs of pan support) | | 12 (*) cm | 14 cm |
| Semi-rapid | | 16 cm | 24 cm |
| Rapid | | 24 cm | 26 cm |
| Double-ring compact | | 26 cm | 28 cm |
| Dual (inner crown only) | | 12 (*) cm | 14 cm |
| Dual (outer crown only) | | 24 cm | 26 cm |
| Dual (inner + outer crown) | | 26 cm | 28 cm |
| Wok (**) | | - | Max 36 cm |
| **do not use pans with concave or convex bases** | | | |

(*) with grill for small cookware: minimum diameter 6 cm
(**) only for models with Double-ring compact or Dual burner and with wok pan adapter supplied

It is important that the diameter of the pot be suitable to the potentiality of the burner so as not to compromise the high output of the burners and therefore energy waste.
A small pot on a large burner does not give you a boiling point in a shorter amount of time since the capacity of heat absorption of a liquid mass depends on the volume and the surface of the pot. Too large a pot can cause damage to the burner and surrounding hob area.

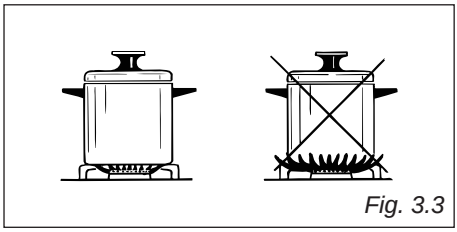
*Fig. 3.3*

**CAUTION:** Make sure the pans are central to the burner for maximum stability and greater efficiency.
Make sure the pans are not in contact with the control knobs, otherwise the flame could overheat the knobs and permanently damage them.

## SMALL PAN ADAPTER (Some models only) (Type A) (fig. 3.4)

This adapter is to be placed on top of the (smaller) auxiliary burner when using small diameter pans, in order to prevent them from tipping over.
It can be used also on the dual burner **when using the inner ring only** with small diameter pans. **Do not use this grate when using the outer ring or the outer & inner ring of the dual burner.**

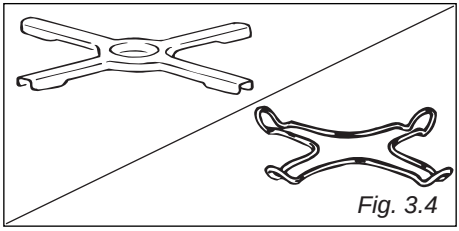
*Fig. 3.4*

## SMALL PAN ADAPTER (Some models only) (Type B)

This adapter is to be placed:

- on top of the (smaller) auxiliary burner when using small diameter pans, in order to prevent them from tipping over;
- It can be used also on the dual burner **when using the inner ring only** with small diameter pans. **Do not use this grate when using the outer ring or the outer & inner ring of the dual burner.**

**IMPORTANT: To avoid any burner malfunction, this adapter MUST be placed correctly (figs. 3.5, 3.6).**

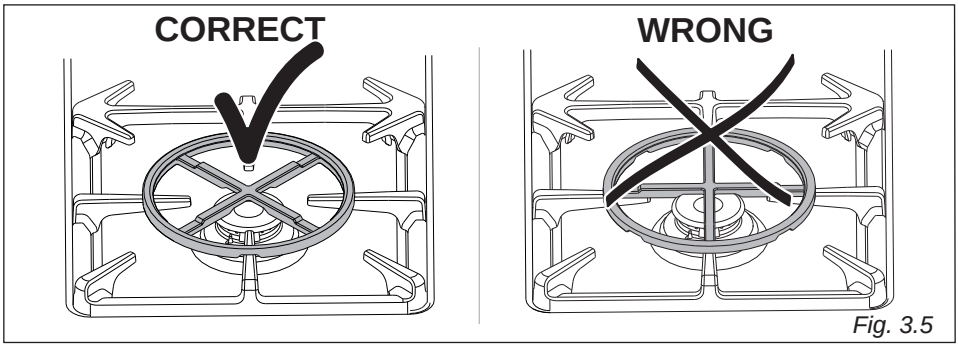


*Fig. 3.5*

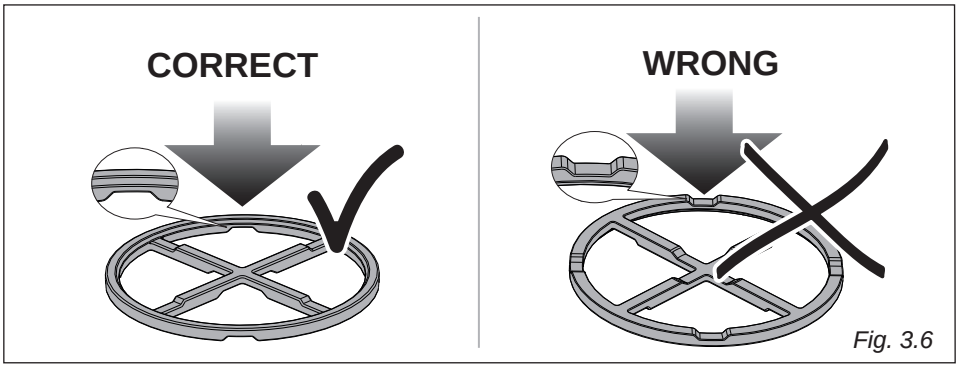


*Fig. 3.6*

## WOK STAND (Some models only) (figs. 3.7a - 3.7b - 3.8a - 3.8b)

This special grille for woks should be placed over the pan-rest for the Double-ring compact and Dual burner. When using a WOK, the supplied wok stand **must** be placed onto the pan stand to avoid any faulty operation of the double-ring compact or dual burner (fig. 3.7a). The wok should not be placed directly onto the pan support without the use of the supplied wok stand (fig. 3.7b).

**Warning:**

- Using woks without this special grille may cause the burner to malfunction.
- Do not use the grille for ordinary, flat-bottomed saucepans.

**IMPORTANT:**

The special grille for wok pans **MUST BE PLACED ONLY** over the pan-rest for the Double-ring compact and Dual burner.

**Under no circumstances should the wok stand be placed under the pan supports** (figs 3.8a - 3.8b). Incorrect placement of the wok stand in this manner may impinge the flame resulting in incomplete combustion and give rise to harmful levels of Carbon Monoxide (CO).

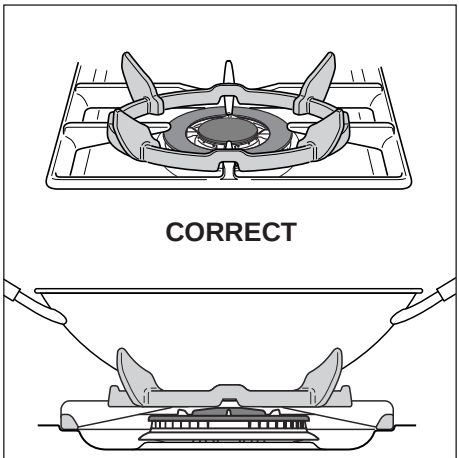


*Fig. 3.7a*

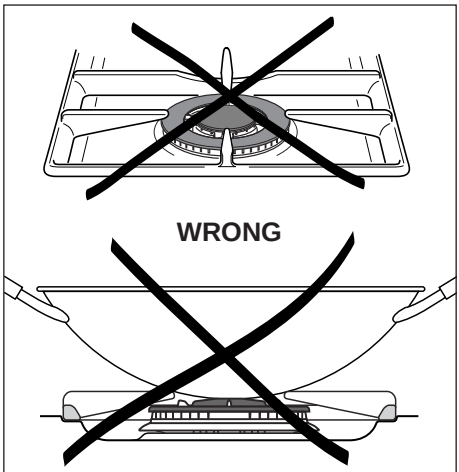


*Fig. 3.7b*

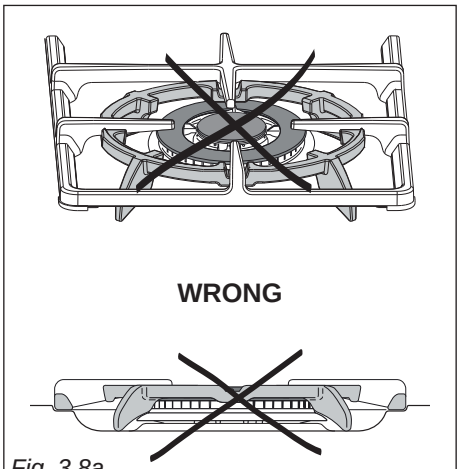


*Fig. 3.8a*

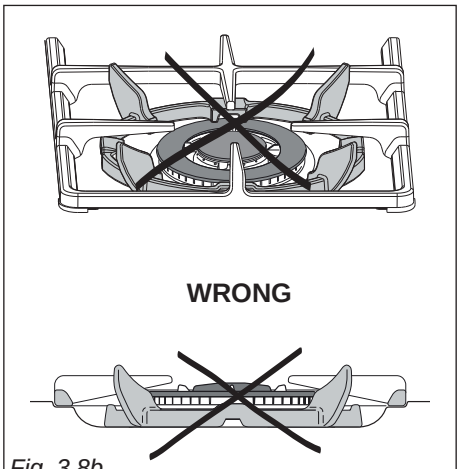


*Fig. 3.8b*

# 4 LEFT MAIN OVEN

**Attention: The oven door becomes very hot during operation.**

**Keep children away.**

## WARNING:

**The door is hot, use the handle.**

**During use the appliance becomes hot. Care should be taken to avoid touching heating elements inside the oven.**

**Do not line the oven walls or floor with aluminium foil. Do not place any trays on the base of the oven chamber.**
**RISK OF IRREPARABLE DAMAGE TO THE ENAMEL.**

**NOTE:** When using the oven for the first time, in order to eliminate any traces of substances or odours left over from the production process, switch the oven on and run it empty (without the accessories, which should be washed separately), keeping the installation environment sufficiently ventilated:

- for 60 minutes in the position at 250 °C;
- for 30 minutes in the position at 250 °C;
- for 15 minutes in the position at 225 °C.

Note: depending on model, only some of these functions may be available.

When the oven has cooled down completely, unplug it from the mains power socket and clean inside it as described in “CLEANING AND MAINTENANCE”.

## THERMOSTAT CONTROL KNOB

To turn on the heating elements of the oven, set function selector knob to the required position and the thermostat knob to the desired temperature.
To set the temperature, line up the temperature knob indicator with the required temperature.
The elements will turn on or off automatically which is determined by the thermostat. The operation of the heating elements is signalled by the oven temperature indicator light.

**NOTE: The symbols shown in this section are for guidance only and represent the primary function.**

**Depending on your model, your oven may only have some of these functions.**
**For best results, always preheat the oven.**

| FUNCTION | NAME OF THE FUNCTION | DESCRIPTION OF THE FUNCTION |
|---|---|---|
| | **OVEN LIGHT** | By turning the function selector knob to this setting, the oven light/s will illuminate in the oven cavity.<br>**Models with electronic clock/programmer “Touch-control” only:**<br>When this function is active, “ ” may appear on the programmer display. This is normal and does not signal the operation of the heating elements, which do not activate in this setting.<br>The oven light/s will operate on all selected functions. |
| | **TRADITIONAL CONVECTION COOKING** | The upper and lower heating elements are switched on.<br>The heat is diffused by natural convection and the temperature must be regulated between the minimum and the maximum position with the thermostat knob.<br>**Recommended for:**<br>For foods which require the same cooking temperature both internally and externally, i. e. roasts, meringue, etc. |
| | **CONVECTION COOKING WITH VENTILATION** | The upper and lower heating elements and the fan motor are switched on.<br>The heat coming from the top and bottom is diffused by forced convection.<br>The temperature must be regulated between the minimum and the maximum position with the thermostat knob.<br>**Recommended for:**<br>For foods of large volume and quantity which require the same internal and external degree of cooking; for ex: rolled roasts, turkey, legs, cakes, etc. |

| | | |
|---|---|---|
| | **LOWER HEATING ELEMENT** | In this position only the lower heating element is switched on.<br>Heat is distributed by natural convection.<br>The temperature must be regulated between the minimum and 250 °C maximum.<br>**Recommended for:**<br>To complete cooking of dishes that require higher temperature at the bottom. |
| | **LOWER HEATING ELEMENT WITH VENTILATION** | The lower heating element and the fan motor are switched on.<br>The heat coming from the bottom is diffused by forced convection.<br>The temperature must be regulated between the minimum and 250 °C maximum with the thermostat knob.<br>**Recommended for:**<br>To complete cooking of dishes that require higher temperature at the bottom. |
| | **UPPER HEATING ELEMENT** | In this position only the upper heating element is switched on.<br>Heat is distributed by natural convection.<br>The temperature must be regulated between the minimum and the maximum position with the thermostat knob.<br>**Recommended for:**<br>To complete cooking of dishes that require higher temperature at the top. |
| | **TRADITIONAL GRILLING** | The infrared heating element is switched on. The heat is diffused by radiation.<br>Use with the oven door **closed** and the thermostat knob must be regulated between the minimum and 225 °C maximum.<br>For correct use see chapter “USE OF THE GRILL”.<br>**Recommended for:**<br>Grilling action for cooking with the broiler; browning, crisping, “au gratin”, toasting, etc. |
| | **DOUBLE GRILL COOKING** | The infrared heating element and the upper heating element is switched on. The heat is diffused by radiation.<br>Use with the oven door **closed** and the thermostat knob must be regulated between the minimum and 225 °C maximum.<br>For correct use see chapter “USE OF THE GRILL”.<br>**Recommended for:**<br>Intense grilling action for cooking with the broiler; browning, crisping, “au gratin”, toasting, etc. |
| | **HOT AIR COOKING** | The circular heating element and the fan motor are switched on.<br>The heat is diffused by forced convection and the temperature must be regulated between the minimum and the maximum position with the thermostat knob.<br>**Recommended for:**<br>For foods that must be well done on the outside and tender or rare on the inside, i. e. lasagna, lamb, roast beef, whole fish, etc. |
| | **VENTILATED DOUBLE GRILL COOKING** | The infrared heating element, the upper heating element and the fan motor are switched on.<br>The heat is mainly diffused by radiation and the fan then distributes it throughout the oven.<br>Use with the oven door **closed** and the thermostat knob must be regulated between the minimum and 200 °C maximum.<br>It is necessary to preheat the oven for about 5 minutes.<br>For correct use see chapter “GRILLING AND AU GRATIN”.<br>**Recommended for:**<br>For grill cooking when a fast outside browning is necessary to keep the juices in, i. e. veal steak, steak, hamburger, etc. |

| | | |
|---|---|---|
| | **DEFROSTING FROZEN FOODS** | Only the oven fan is switched on.<br>To be used with the thermostat knob in the "●" (off) position because the other positions have no effect.<br>The defrosting is done by simple ventilation without heat.<br>**Recommended for:**<br>To rapidly defrost frozen foods; 1 kilogram requires about one hour. The defrosting times vary according to the quantity and type of foods to be defrosted. |
| | **HOT AIR COOKING WITH UPPER HEATING ELEMENT** | The circular heating element, the fan motor and the upper heating elements are switched on.<br>The heat is diffused by forced convection and the temperature must be regulated between the minimum and the maximum position with the thermostat knob.<br>**Recommended for:**<br>cooking of frozen products.<br>This function can also be used for quick preheating.<br>Set the thermostat knob to the desired temperature; when the pre-heating temperature has been reached, the oven temperature indicator light, placed on the control panel, switches off. You can then select the cooking function you want. |
| | **HOT AIR COOKING WITH LOWER HEATING ELEMENT** | The circular heating element, the fan motor and the lower heating elements are switched on.<br>The heat is diffused by forced convection and the temperature must be regulated between the minimum and the maximum position with the thermostat knob.<br>**Recommended for:**<br>Foods that need to be cooked with more heat underneath, e.g. pizza, quiche, etc. |
| | **GENTLE COOKING** | This function is particularly beneficial for the gentle cooking of small quantities of food on a single shelf. It is recommended to place the food on the first rack from the bottom.<br>It is not necessary to preheat the oven and use with the oven door closed.<br>Cooking times may be longer than standard functions.<br>Do not use this function to preheat the oven. |

| **OPTIONAL ADDITIONAL FUNCTIONS TO THE PRIMARY FUNCTION** | | |
|---|---|---|
| | EASY STEAM | See chapter "EASY STEAM" |
| | IDROCLEAN | For the Idroclean function, see chapter "CLEANING AND MAINTENANCE" |
| | ROTISSERIE | See chapter "ROTISSERIE" and "USE OF THE ROTISSERIE" |
| | LEAVENING FUNCTION | See chapter "LEAVENING FUNCTION" |

| | | |
|---|---|---|
| | REGENERATION - KEEPING FOOD WARM | See chapter “REGENERATION” |
| | PIZZA FUNCTION | See chapter “PIZZA FUNCTION” |
| or | TURBO / BOOSTER | This special function allows a fast pre-heating of the cavity.<br>The circular heating element, the fan motor and the upper heating elements are switched on.<br>Set the thermostat knob to the desired temperature; when the pre-heating temperature has been reached, the oven temperature indicator light, placed on the control panel, switches off. You can then select the cooking function you want.<br>For optimum preheating, wait for at least 20 minutes before placing food in the oven. |
| AIR FRY | AIR FRY | With the aid of the **Air Fry** function AIR FRY it is possible to cook food in a healthy way, without adding oils and fats.<br>The operation in combination with circular heating element, fan motor and upper heating element, allows to cook without added condiments, French fries, chicken wings, croquettes and other frozen or precooked foods.<br>In addition, the special Air Fry enamelled tray (*) has a perforated surface so as to facilitate the entry of air, giving the dishes a tasty crispy effect (see dedicated section).<br>**Recommended for:** frozen and/or pre-cooked products.<br>This function can also be used for quick preheating. See function “TURBO / BOOSTER”. |

(*) Not all of the accessories / ovenware are included in the standard equipment.

## EASY STEAM (some models only)

By evaporating water inside the oven, the Easy Steam function helps make food soft on the inside and crisp on the outside.

1. With the oven cold, pour 250 ml of drinking water (or the quantities of water indicated in the cooking tables) into the circular well on the floor of the oven.
2. Place the food in the oven and activate the Easy Steam function.

   **Caution: never open the door or top up the water when cooking is in progress. Burns hazard!**
3. At the end of the cooking process, open the door slowly and let the steam out.

**Caution: to prevent the formation of lime-scale, you are advised to clean the bottom of the oven after each cooking cycle with Easy Steam, once the oven has cooled down completely.**

**You are also advised to wipe the condensation off the door glass with a soft cloth (see “CLEANING AND MAINTENANCE”).**

**Alternate Easy Steam cycles with conventional cooking cycles.**

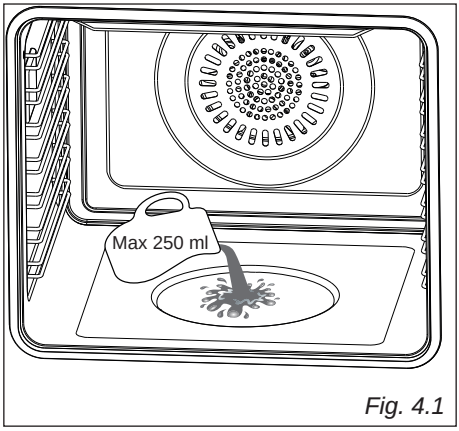

*Fig. 4.1*

## ROTISSERIE (some models only)

This is used for spit roasting and comprises:

- an electrical motor mounted on the rear part of the oven;
- a stainless steel rod, equipped with a detachable athermic grip and 2 recordable forks;
- a rod support to be inserted into the central guides of the oven cavity.

The rotisserie motor is operated by switch the knob in the position .

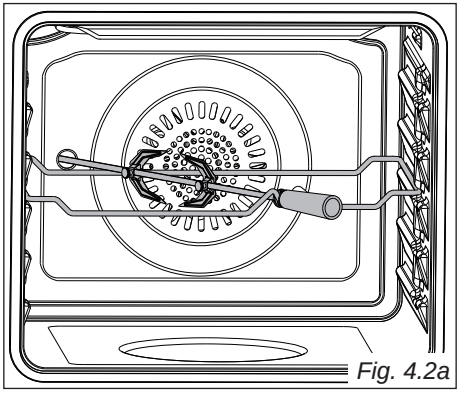

*Fig. 4.2a*

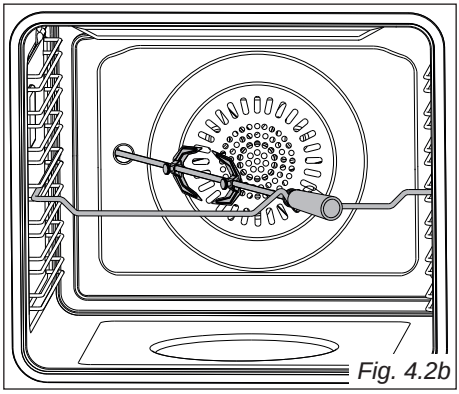

*Fig. 4.2b*

## ROTISSERIE (some models only)

This is used for spit roasting and comprises:

- an electrical motor mounted on the rear part of the oven;
- a stainless steel rod, equipped with a detachable athermic grip and 2 recordable forks;
- a rod support to be inserted into the central guides of the oven cavity.

The rotisserie motor is operated by switch the knob in the position .

## USE OF THE ROTISSERIE (fig.4.2a, 4.2b)

- Insert the baking tray into the lowest rack holders of the oven and insert the rod support into the intermediate rack holders (fig. 4.2a, 4.2b).
- Put the meat to be cooked onto the rod, being careful to secure it in the center with the special forks.
  **Important!**
  **Take care, the forks are sharp!**
- Insert the rod into the motor opening (fig. 4.2a, 4.2b). It is correctly fitted only if the rod does not turn when inserted. It will then rotate only when the spit motor is operating (check the right rotation of the rod).
- Rest the rod onto the support of the spit collar (fig. 4.2a, 4.2b); then remove the grip by turning it to the left.
- Close the oven door and switch the knob in the position .
  The rotation direction of the rotisserie can be either clockwise or counter-clockwise.

**Very important: The rotisserie must always be used with the oven door closed.**

**Do not grill for longer than 60 minutes at any one time.**

**Attention: The oven door becomes very hot during operation. Keep children away.**

**CAUTION: When the grill is on, some parts may become hot. Keep children away.**

## STERILIZATION

Sterilization of foods to be conserved, in full and hermetically sealed jars, is done in the following way:

a. Set the switch to position .
b. Set the thermostat knob to position 185 °C and preheat the oven.
c. Fill the baking tray with hot water.
d. Set the jars into the baking tray making sure they do not touch each other and the door and set the thermostat knob to position 135 °C.

When sterilization has begun, that is, when the contents of the jars start to bubble, turn off the oven and let cool.

## REGENERATION

Set the switch to position and the thermostat knob to position 150 °C.
Bread becomes fragrant again if wet with a few drops of water and put into the oven for about 10 minutes at the highest temperature.

## COOKING DIFFERENT DISHES AT THE SAME TIME

With the function selector in position and , the ventilated oven allows you to cook different types of food at the same time.
Fish, cakes and meat can be cooked together without the smells and flavours mixing.
The only precautions required are the following:

- The cooking temperatures must be as close as possible with a maximum difference of 20 - 25 °C between the different foods.
- Different dishes must be placed in the oven at different times according to the cooking time required for each one. This type of cooking obviously provides a considerable saving on time and energy.

## GRILLING AND “AU GRATIN”

Grilling may be done by selecting grill+fan setting with the function selector knob, because the hot air completely envelops the food that is to be cooked.

Set the thermostat knob between **the minimum position and 200 °C maximum**, and after having preheated the oven, simply place the food on the grid.
**Close the door** and let the oven operate until grilling is done.
Adding a few dabs of butter before the end of the cooking time gives the golden “au gratin” effect.

**Do not grill for longer than 60 minutes at any one time.**

**CAUTION: When the grill is on, some parts may become hot. Keep children away.**

## USE OF THE GRILL

Leave to warm up for approximately 5 minutes with the door closed.
Place the food inside positioning the rack as near as possible to the grill.
Insert the baking tray under the rack to collect the cooking juices.
Always grill with the oven door closed.

CAUTION: You can only use the grill function after an oven-cooking cycle if the temperature you set is higher than the one just used for oven cooking.

**Do not grill for longer than 60 minutes at any one time.**

**CAUTION: When the grill is on, some parts may become hot. Keep children away.**

## OVEN COOKING

To cook, before introducing the food, preheat the oven to the desired temperature.
When the oven has reached the desired temperature, introduce the food, control the cooking time and tum off the oven 5 minutes before the theoretical time to recuperate the stored heat.

# PIZZA STONE (SOME MODELS ONLY)

Pizza Stone, the baking stone that retains the moisture from the dough and distributes heat evenly, is made with materials that can reach and maintain high temperatures. Ideal accessory for cooking pizza, bread and focaccia.

# PIZZA FUNCTION

1. Place the pizza stone on an oven grid. Insert the grid on the first level of the side rack, counting from the bottom.
2. Turn on and preheat the oven with the stone inside. Select the pizza function and set the temperature to 300 °C. Now preheat for at least 30 minutes. Do not preheat the oven with the turbo/booster function.
3. Once the oven has reached 300 °C, place the pizza on the pizza stone.
4. For optimum cooking, see the Pizza Function table.
5. After cooking, leave the stone in the oven to cool completely.

## CLEANING THE PIZZA STONE

Once the pizza stone has cooled down, clean it with a soft damp cloth, avoiding direct contact with water.
If necessary, use a metal spatula or knife to remove any food residues before cleaning with the cloth.
The stone is made of porous material, so do not wash it with detergents.
Do not wash in a dishwasher.
With use, dark patches may appear on the pizza stone: these have no effect on the quality of cooking.

## LEAVENING FUNCTION (some models only)

The leavening function cuts the time it takes for your dough to rise.

Put the dough in an oven-proof container and place the container on an oven grid on the third level.

Turn the switch knob to the leavening function and set the thermostat to 40 °C. See corresponding icons.

Leave the dough to rise in the oven until it reaches twice its original volume. Leavening times may vary according to dough type and room temperature.

## DESSERT DISH (some models only)

Aluminium tray, ideal for cooking biscuits and pastries.
The tray has a flat, non-stick surface, so there is no need to grease it or use baking paper to get perfect bakes.

Do not wash in a dishwasher.

## AIR FRY ENAMELLED TRAY (some models only)

The special Air Fry enamelled tray has a perforated surface so as to facilitate the entry of air, giving the dishes a tasty crispy effect without adding condiments.

**Recommended for:**
French fries (frozen potatoes classic or rustics), chicken wings, potato croquettes and other frozen or pre-cooked foods.

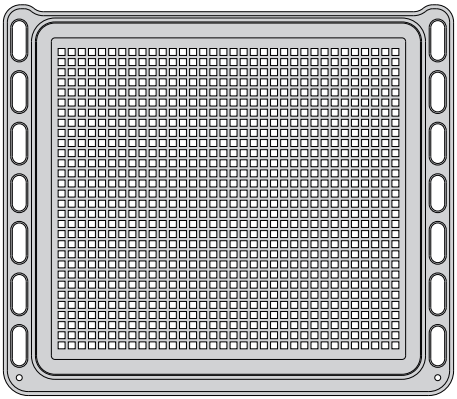

# 5 RIGHT OVEN

**Attention: the oven door becomes very hot during operation.**
**Keep children away.**

**WARNING:**
**The door is hot, use the handle.**

**During use the appliance becomes hot. Care should be taken to avoid touching heating elements inside the oven.**

**Do not line the oven walls or base with aluminium foil. Do not place baking trays or the drip tray on the base of the oven chamber.**

**NOTE:** When using the oven for the first time, in order to eliminate any traces of substances or odours left over from the production process, switch the oven on and run it empty (without the accessories, which should be washed separately), keeping the installation environment sufficiently ventilated:

- for 60 minutes in the position (maximum temperature);
- for 60 minutes in the position (maximum temperature);
- for 15 minutes in the position (maximum temperature).

Note: depending on model, only some of these functions may be available.

When the oven has cooled down completely, unplug it from the mains power socket and clean inside it as described in “CLEANING AND MAINTENANCE”.

## THERMOSTAT CONTROL KNOB

To turn on the heating elements of the oven, set function selector knob to the required position and the thermostat knob to the desired temperature.
To set the temperature, line up the temperature knob indicator with the required temperature.
The elements will turn on or off automatically which is determined by the thermostat. The operation of the heating elements is signalled by the oven temperature indicator light.

**NOTE: The symbols shown in this section are for guidance only and represent the primary function.**

**Depending on your model, your oven may only have some of these functions.**
**For best results, always preheat the oven.**

| FUNCTION | NAME OF THE FUNCTION | DESCRIPTION OF THE FUNCTION |
|---|---|---|
| | **OVEN LIGHT** | By turning the function selector knob to this setting, the oven light/s will illuminate in the oven cavity.<br>The oven light/s will operate on all selected functions. |
| In some models, the following symbol may be present in combination with : | **TRADITIONAL CONVECTION COOKING**<br>and/or<br>**PLATE WARMING** | The upper and lower heating elements are switched on.<br>The heat is diffused by natural convection and the temperature must be regulated between the minimum and the maximum position with the thermostat knob.<br>**Recommended for:**<br>For foods which require the same cooking temperature both internally and externally, i. e. roasts, meringue, etc.<br>**Models equipped with special dish rack only:** This function can be used for plate warming using the special dish rack.<br>The temperature must be set at about 60 °C.<br>See also chapters “USE OF SPECIAL DISH RACK”, “USING THE SPECIAL SHELF AS A DISH RACK”, and “USING THE SPECIAL RACK FOR NORMAL COOKING“. |

| | | |
|---|---|---|
| | **CONVECTION COOKING WITH VENTILATION** | The upper and lower heating elements and the fan motor are switched on.<br>The heat coming from the top and bottom is diffused by forced convection.<br>The temperature must be regulated between the minimum and the maximum position with the thermostat knob.<br>**Recommended for:**<br>For foods of large volume and quantity which require the same internal and external degree of cooking; i. e.: rolled roasts, turkey, legs, cakes, etc. |
| | **LOWER HEATING ELEMENT** | In this position only the lower heating element is switched on.<br>Heat is distributed by natural convection.<br>The temperature must be regulated between the minimum and 250 °C maximum.<br>**Recommended for:**<br>To complete cooking of dishes that require higher temperature at the bottom. |
| | **LOWER HEATING ELEMENT WITH VENTILATION** | The lower heating element and the fan motor are switched on.<br>The heat coming from the bottom is diffused by forced convection.<br>The temperature must be regulated between the minimum and 250 °C maximum with the thermostat knob.<br>**Recommended for:**<br>To complete cooking of dishes that require higher temperature at the bottom. |
| | **UPPER HEATING ELEMENT** | In this position only the upper heating element is switched on.<br>Heat is distributed by natural convection.<br>The temperature must be regulated between the minimum and the maximum position with the thermostat knob.<br>**Recommended for:**<br>To complete cooking of dishes that require higher temperature at the top. |
| | **TRADITIONAL GRILLING** | The infrared heating element is switched on. The heat is diffused by radiation.<br>Use with the oven door **closed** and the thermostat knob must be regulated between the minimum and 225 °C maximum.<br>For correct use see chapter “USE OF THE GRILL”.<br>**Recommended for:**<br>Grilling action for cooking with the broiler; browning, crisping, “au gratin”, toasting, etc. |
| | **DOUBLE GRILL COOKING** | The infrared heating element and the upper heating element is switched on. The heat is diffused by radiation.<br>Use with the oven door **closed** and the thermostat knob must be regulated between the minimum and 225 °C maximum.<br>For correct use see chapter “USE OF THE GRILL”.<br>**Recommended for:**<br>Intense grilling action for cooking with the broiler; browning, crisping, “au gratin”, toasting, etc. |
| | **HOT AIR COOKING** | The circular heating element and the fan motor are switched on.<br>The heat is diffused by forced convection and the temperature must be regulated between the minimum and the maximum position with the thermostat knob.<br>**Recommended for:**<br>For foods that must be well done on the outside and tender or rare on the inside, i. e. lasagna, lamb, roast beef, whole fish, etc. |

| | | |
|---|---|---|
| | **VENTILATED GRILL COOKING** | The infrared heating element, the upper heating element and the fan motor are switched on.<br>The heat is mainly diffused by radiation and the fan then distributes it throughout the oven.<br>Use with the oven door **closed** and the thermostat knob must be regulated between the minimum and 200 °C maximum.<br>It is necessary to preheat the oven for about 5 minutes.<br>For correct use see chapter “GRILLING AND AU GRATIN”.<br>**Recommended for:**<br>For grill cooking when a fast outside browning is necessary to keep the juices in, i. e. veal steak, steak, hamburger, etc. |
| | **DEFROSTING FROZEN FOODS** | Only the oven fan is switched on.<br>To be used with the thermostat knob in the “●” (off) position because the other positions have no effect.<br>The defrosting is done by simple ventilation without heat.<br>**Recommended for:**<br>To rapidly defrost frozen foods; 1 kilogram requires about one hour. The defrosting times vary according to the quantity and type of foods to be defrosted. |
| | **HOT AIR COOKING WITH UPPER HEATING ELEMENT** | The circular heating element, the fan motor and the upper heating elements are switched on.<br>The heat is diffused by forced convection and the temperature must be regulated between the minimum and the maximum position with the thermostat knob.<br>**Recommended for:**<br>cooking of frozen products.<br>This function can also be used for quick preheating.<br>Set the thermostat knob to the desired temperature; when the pre-heating temperature has been reached, the oven temperature indicator light, placed on the control panel, switches off. You can then select the cooking function you want. |
| | **HOT AIR COOKING WITH LOWER HEATING ELEMENT** | The circular heating element, the fan motor and the lower heating elements are switched on.<br>The heat is diffused by forced convection and the temperature must be regulated between the minimum and the maximum position with the thermostat knob.<br>**Recommended for:**<br>Foods that need to be cooked with more heat underneath, e.g. pizza, quiche, etc. |

| **OPTIONAL ADDITIONAL FUNCTIONS TO THE PRIMARY FUNCTION** | | |
|---|---|---|
| | EASY STEAM | See chapter “EASY STEAM” |
| | IDROCLEAN | For the Idroclean function, see chapter “CLEANING AND MAINTENANCE” |
| | ROTISSERIE | See chapter “ROTISSERIE” and “USE OF THE ROTISSERIE” |

| | | |
|---|---|---|
| | LEAVENING FUNCTION | See chapter “LEAVENING FUNCTION” |
| | REGENERATION - KEEPING FOOD WARM | See chapter “REGENERATION” |
| | PIZZA FUNCTION | See chapter “PIZZA FUNCTION” |
| or | TURBO / BOOSTER | This special function allows a fast pre-heating of the cavity.<br>The circular heating element, the fan motor and the upper heating elements are switched on.<br>Set the thermostat knob to the desired temperature; when the pre-heating temperature has been reached, the oven temperature indicator light, placed on the control panel, switches off. You can then select the cooking function you want.<br>For optimum preheating, wait for at least 20 minutes before placing food in the oven. |

(*) Not all of the accessories / ovenware are included in the standard equipment.

## ROTISSERIE (some models only)

This is used for spit roasting and comprises:

- an electrical motor mounted on the rear part of the oven;
- a stainless steel rod, equipped with a detachable athermic grip and 2 recordable forks;
- a rod support to be inserted into the central guides of the oven cavity.

The rotisserie motor is operated by switch the knob in the position .

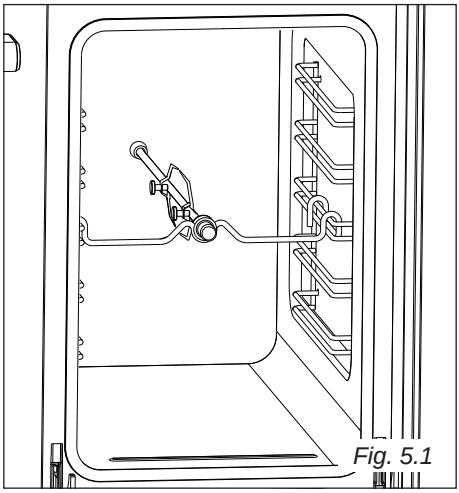

*Fig. 5.1*

## USE OF THE ROTISSERIE (fig. 5.1)

- Insert the baking tray into the lowest rack holders of the oven and insert the rod support into the intermediate rack holders (fig. 5.1).
- Put the meat to be cooked onto the rod, being careful to secure it in the center with the special forks.
  **Important!**
  **Take care, the forks are sharp!**
- Insert the rod into the motor opening (fig. 5.1). It is correctly fitted only if the rod does not turn when inserted. It will then rotate only when the spit motor is operating (check the right rotation of the rod).
- Rest the rod onto the support of the spit collar (fig. 5.1); then remove the grip by turning it to the left.
- Close the oven door and switch the knob in the position .
  The rotation direction of the rotisserie can be either clockwise or counter-clockwise.

**Very important: The rotisserie must always be used with the oven door closed.**

**Do not grill for longer than 60 minutes at any one time.**

**Attention: The oven door becomes very hot during operation. Keep children away.**

**CAUTION: When the grill is on, some parts may become hot. Keep children away.**

## USE OF SPECIAL DISH RACK (some models only)

This special shelf can be used as dish rack or turning over, as normal shelf for oven cooking.
It must be inserted between the guides of the lateral racks.

## USING THE SPECIAL SHELF AS A DISH RACK

Slide in the shelf on the guides, on the lower level of the lateral racks.
The prongs where the plates are to be inserted must be turned upwards.
The shelf must be fitted so that the safety catch, which stops it sliding out, faces the bottom of the oven (see detail of figure 5.2).
The plates must be positioned as indicated in figure 5.2.
To facilitate this operation, pull the special rack up to the safety lock.
**KEEP ATTENTION: Plates are hot after warming. It is advisable to handle the plates using oven gloves.**

## USING THE SPECIAL RACK FOR NORMAL COOKING

Slide in the shelf on the guides: the safety catch must be turned toward the oven base (see detail of figure 5.3).
The flat surface can be used to put cooking pans or food directly on the rack - the dripping pan should be placed under the rack to catch the cooking juices and fats.

*Fig. 5.2*

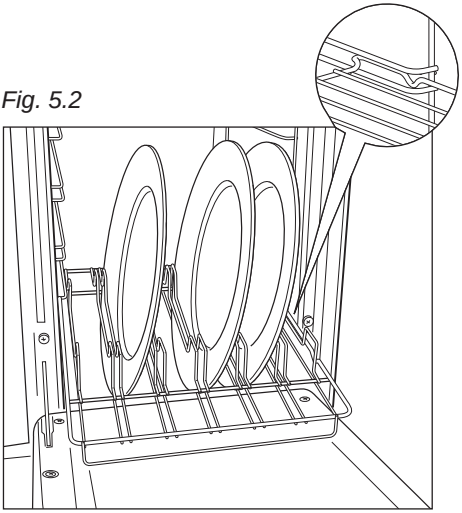

*Fig. 5.3*

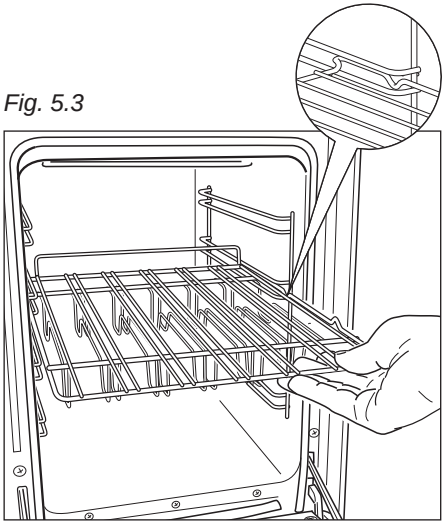

# 6 COOKING ADVICE

## LEFT MAIN OVEN

The cooking settings specified in the tables below are guidelines and may vary according to the type and quantity of ingredients and the type of accessory used.

The appliance's cooking performance may differ from the performance of your previous appliance. You may therefore need to review the settings you usually use (temperature, cooking time and which level you place the oven grid on) according to the recommendations provided in the tables.

Remember to use ovenproof dishes and to adjust the oven temperature during cooking if necessary. For best results, always preheat the oven.

Not all of the accessories/ovenware are included in the standard equipment. Those that are not included can be ordered as optional accessories or purchased on the open market.

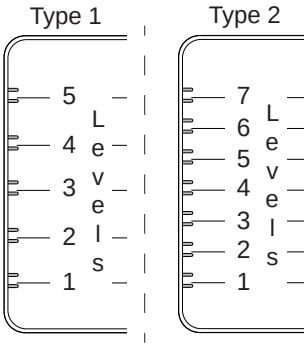

## PIZZA

| | WEIGHT [gr] | TEMP. [°C] | FUNCTION | LEVELS [1÷5] | LEVELS [1÷7] | TIME [min.] | WATER [ml] | ACCESSORIES / DISHES |
|---|---|---|---|---|---|---|---|---|
| MARGHERITA PIZZA | 180 | 300 | or | 1 or 2-3 | 1 o 3-4 | 4 - 5 | | Pizza stone |
| CAPRICCIOSA PIZZA | 180 | 300 | or | 1 or 2-3 | 1 o 3-4 | 5 - 6 | | Pizza stone |
| CALZONE PIZZA | 180 | 300 | or | 1 or 2-3 | 1 o 3-4 | 5 - 7 | | Pizza stone |

## BAKERY

| | WEIGHT [gr] | TEMP. [°C] | FUNCTION | LEVELS [1÷5] | LEVELS [1÷7] | TIME [min.] | WATER [ml] | ACCESSORIES / DISHES |
|---|---|---|---|---|---|---|---|---|
| BIGA BREAD | 390-410 | 210-230 | | 2 | 2 | 25-35 | 110-130 | Pizza stone |
| BREAD 4 pieces | 90-110 piece | 225-240 | | 2-3 | 3 | 30-40 | 100-170 | Pizza stone |
| FOCACCIA WITH OLIVES | 400-500 | 245-260 | | 2-3 | 3 | 20-25 | | Aluminium baking tray |
| CLASSIC FOCACCIA | 400-500 | 225-240 | | 2-3 | 3 | 20-25 | | Aluminium baking tray |

## FIRST COURSES

| | WEIGHT [gr] | TEMP. [°C] | FUNCTION | LEVELS [1÷5] | LEVELS [1÷7] | TIME [min.] | WATER [ml] | ACCESSORIES / DISHES |
|---|---|---|---|---|---|---|---|---|
| LASAGNE | 900-1000 | 175-190 | | 2-3 | 3 | 25-35 | | Aluminium baking tray |
| AUBERGINE PARMESAN | 600-750 | 180-200 | | 2-3 | 3 | 20-30 | | Aluminium baking tray |
| SAVOURY CAKE | 800-900 | 190-210 | | 2-3 | 3 | 40-50 | | Aluminium baking tray |

## VEGETABLES

| | WEIGHT [gr] | TEMP. [°C] | FUNCTION | LEVELS [1÷5] | LEVELS [1÷7] | TIME [min.] | WATER [ml] | ACCESSORIES / DISHES |
|---|---|---|---|---|---|---|---|---|
| POTATOES | 240-260 | 170-190 | | 2-3 | 3 | 35-45 | | Baking tray |
| CARROTS | 150-170 | 170-190 | | 2-3 | 3 | 30-40 | | Baking tray |
| BROCCOLI | 150-160 | 165-180 | | 2-3 | 3 | 20-30 | 155-165 | Baking tray |
| CAVOLFLOWERS | 400-500 | 165-180 | | 2-3 | 3 | 20-30 | | Baking tray |

## POULTRY

| | WEIGHT [gr] | TEMP. [°C] | FUNCTION | LEVELS [1÷5] | LEVELS [1÷7] | TIME [min.] | WATER [ml] | ACCESSORIES / DISHES |
|---|---|---|---|---|---|---|---|---|
| TURKEY RUMP | 400-450 | 170-190 | | 2-3 | 3 | 40-50 | 90-110 | Baking tray |
| CHICKEN | 1100-1300 | 190-210 | | 2 | 2 | 65-75 | | Baking tray |
| ROASTED CHICKEN | 1200-1400 | 190-210 | | | | 85-95 | | Rotisserie |

## MEAT

| | WEIGHT [gr] | TEMP. [°C] | FUNCTION | LEVELS [1÷5] | LEVELS [1÷7] | TIME [min.] | WATER [ml] | ACCESSORIES / DISHES |
|---|---|---|---|---|---|---|---|---|
| ROAST VEAL | 350-450 | 160-180 | | 2-3 | 3 | 80-100 | 150-170 | Baking tray |

## FISH

| | WEIGHT [gr] | TEMP. [°C] | FUNCTION | LEVELS [1÷5] | LEVELS [1÷7] | TIME [min.] | WATER [ml] | ACCESSORIES / DISHES |
|---|---|---|---|---|---|---|---|---|
| SEA BASS | 900-1000 | 175-190 | | 3 | 4 | 30-40 | | Baking tray |
| TROUT 2 Portions | 1100-1300 | 175-190 | | 3 | 4 | 20-30 | 195-210 | Baking tray |
| SEA BREAM | 500-650 | 175-190 | | 2-3 | 3 | 25-35 | 100-125 | Baking tray |
| BAKED SEA BREAM | 450-550 | 175-180 | | 2-3 | 3 | 25-35 | | Baking tray |
| SLICE OF SALMON | 150-250 | 190-210 | | 2-3 | 3 | 10 - 15 | 100-125 | Baking tray |

## SWEETS

| | WEIGHT [gr] | TEMP. [°C] | FUNCTION | LEVELS [1÷5] | LEVELS [1÷7] | TIME [min.] | WATER [ml] | ACCESSORIES / DISHES |
|---|---|---|---|---|---|---|---|---|
| SPUNGE CAKE | 360-430 | 175-180 | | 2-3 | 3 | 20-30 | | Round cake tin |
| JAM CROSTATA | 700-800 | 175-185 | | 2-3 | 3 | 20-30 | | Cake tin |
| PLUM CAKE | 450-550 | 160-180 | | 2 | 2 | 30-40 | | Rectangular cake tin |
| MUFFIN | 350-450 | 160-180 | | 2 | 2 | 20-35 | 140-160 | Muffin cups |
| STRUDEL | 650-750 | 175-185 | | 2-3 | 3 | 25-35 | | Baking tray |
| POUND CAKE | 680-730 | 175-185 | | 2-3 | 3 | 35-45 | | Round cake tin |
| APPLE CAKE | 1350-1500 | 175-185 | | 2-3 | 3 | 35-45 | | Round cake tin |
| BISCUITS | 135-150 | 175-185 | | 2 | 2 | 12-18 | | Dessert dish |
| BISCUITS | 270-300 | 175-185 | | Multilevel 2 and 4 | Multilevel 2 and 4 | 12-18 | | Dessert dish |

## FROZEN FOODS

| | WEIGHT [gr] | TEMP. [°C] | FUNCTION | LEVELS [1÷5] | LEVELS [1÷7] | TIME [min.] | WATER [ml] | ACCESSORIES / DISHES |
|---|---|---|---|---|---|---|---|---|
| FROZEN POTATOES Classic | 580-620 | 195-205 | | 3 | 3 | 12 - 15 | | Air fry tray |
| FROZEN POTATOES Rustics | 600-700 | 215-225 | | 3 | 3 | 12 - 15 | | Air fry tray |
| NUGGETS | 220-270 | 175-185 | | 3 | 4 | 12 - 17 | | Air fry tray |
| POTATO CROQUETTES | 700-800 | 215-225 | | 3 | 4 | 14 - 17 | | Air fry tray |
| BATTERED VEGETABLE | 450-550 | 215-225 | | 3 | 3 | 12 - 15 | | Air fry tray |

## RIGHT OVEN

The cooking settings specified in the tables below are guidelines and may vary according to the type and quantity of ingredients and the type of accessory used.

The appliance's cooking performance may differ from the performance of your previous appliance. You may therefore need to review the settings you usually use (temperature, cooking time and which level you place the oven grid on) according to the recommendations provided in the tables.

Remember to use ovenproof dishes and to adjust the oven temperature during cooking if necessary. For best results, always preheat the oven.

Not all of the accessories/ovenware are included in the standard equipment. Those that are not included can be ordered as optional accessories or purchased on the open market.

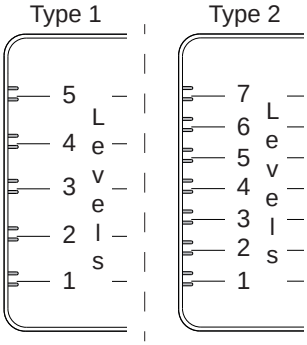


## BAKERY

| | WEIGHT [gr] | TEMP. [°C] | FUNCTION | LEVELS [1÷5] | LEVELS [1÷7] | TIME [min.] | WATER [ml] | ACCESSORIES / DISHES |
|---|---|---|---|---|---|---|---|---|
| BREAD | 800 | 200 | | 2 | 2 | 35-45 | | Baking tray |
| BREAD | 800 | 200 | | 2 | 2 | 25-35 | 150 | Baking tray |

## PIZZA

| | WEIGHT [gr] | TEMP. [°C] | FUNCTION | LEVELS [1÷5] | LEVELS [1÷7] | TIME [min.] | WATER [ml] | ACCESSORIES / DISHES |
|---|---|---|---|---|---|---|---|---|
| PAN PIZZA | 450 | 300 | | 2-3 | 3-4 | 9 - 10 | | Baking tray |
| ROUND PIZZA | 200 | 300 | or | 2-3 | 3-4 | 5 - 6 | | Baking tray |

## MEAT

| | WEIGHT [gr] | TEMP. [°C] | FUNCTION | LEVELS [1÷5] | LEVELS [1÷7] | TIME [min.] | WATER [ml] | ACCESSORIES / DISHES |
|---|---|---|---|---|---|---|---|---|
| ROAST | 700-900 | 160-200 | | 2-3 | 3 | 50 - 60 | | Baking tray |

## SWEETS

| | WEIGHT [gr] | TEMP. [°C] | FUNCTION | LEVELS [1÷5] | LEVELS [1÷7] | TIME [min.] | WATER [ml] | ACCESSORIES / DISHES |
|---|---|---|---|---|---|---|---|---|
| PLUM CAKE | 800-900 | 160-180 | | 2 | 2 | 40 - 50 | | Rectangular cake tin |
| MUFFIN | 250 | 160 | | 2-3 | 3 | 20 - 30 | | Muffin cups |

# 7 OVEN TEMPERATURE GUIDE

| Cooking process | Oven heat | Gas mark | Electric oven temperature | |
|---|---|---|---|---|
| | | | °C | °F |
| Keeping food hot, milk puddings | very cool | ½ | 120 | 250 |
| Egg custards | cool | 1 | 140 | 275 |
| Rich fruit cakes, braising | cool | 2 | 150 | 300 |
| Low temperature roasting, shortbread | moderate | 3 | 160 | 325 |
| Victoria sandwich, plain fruit cake, baked fish | moderate | 4 | 180 | 350 |
| Small cakes, choux pastry | fairly hot | 5 | 190 | 375 |
| Short pastry, Swiss rolls, soufflés | fairly hot | 6 | 200 | 400 |
| High temperature roasting, flaky pastry, scones | hot | 7 | 220 | 425 |
| Puff pastry, bread | very hot | 8 | 230 | 450 |
| Small puff pastries, browning cooked foods | very hot | 9 | 240 | 475 |

These temperatures relate to the centre oven temperature.
Remember to use ovenproof dishes and to adjust the oven temperature during cooking if necessary.

**NOTE:** Reduce the oven temperature by 10 – 20 °C for fan assisted ovens.
For dishes that take over an hour to cook, reduce the cooking time by 10 minutes per hour.

# 8 60’ or 120’ ALARM - CUT-OFF TIMER

## MODELS WITH 60 OR 120 MINUTES ALARM (fig. 8.1, 8.2)

The minute counter is a timed acoustic warning device which can be set for a maximum of 60 or 120 minutes. The knob (fig. 8.1, 8.2) must be rotated clockwise as far as the 60 or 120 minutes position and then set to the required time by rotating it counterclockwise.

**ATTENTION - MOST IMPORTANT: This is only an alarm that DOES NOT switch off the oven or grill. REMEMBER TO TURN OFF THE OVEN/GRILL MANUALLY.**

**NOTES:**
**The knobs and symbols may vary.**
**The symbols may be printed on the knob itself or on the control panel.**

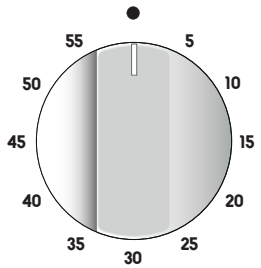

*Fig. 8.1*

## CUT-OFF TIMER (fig. 8.3a, 8.3b)

The timer runs the oven for a preset time.

**1) Starting up.**
After setting the function selector and thermostat to the required mode and temperature, rotate the timer knob clockwise until you reach the required cooking time (max 120 minutes) (fig. 8.3a).
Once this time has elapsed, the timer will return to the "**0**" (off) position and the oven will automatically switch off.

**2) Manual position.**
If the cooking time is longer than two hours or if you wish to use the oven manually, switching it off as required, the knob must be turned to position ✋ (fig. 8.3b).

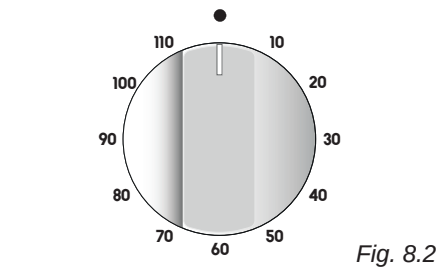

*Fig. 8.2*

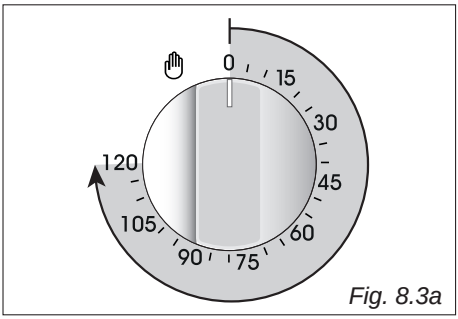

*Fig. 8.3a*

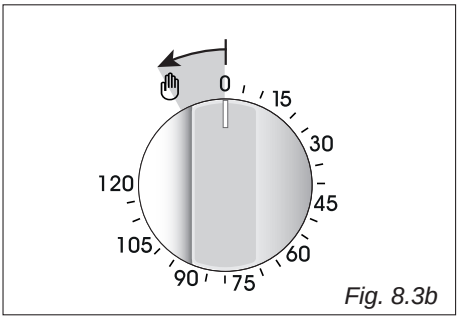

*Fig. 8.3b*

# 9 ELECTRONIC CLOCK/PROGRAMMER "TOUCH-CONTROL"

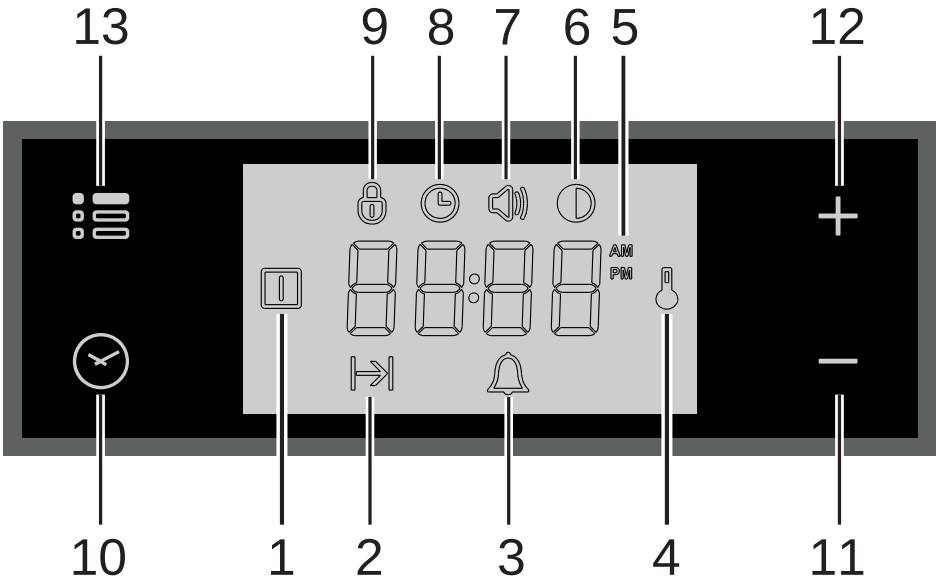

## Description of display symbols:

1. Oven on
2. Cooking time
3. Timer
4. Oven temperature
5. AM/PM time format
6. Screen brightness
7. Acoustic signal volume
8. Time of day setting
9. Programmer ‘touch’ control panel key lock

## Description of the ‘touch control’ panel symbols:

10. Program selection
11. Digit backward setting for all functions
12. Digit forward setting for all functions
13. Menu selection

**IMPORTANT NOTE:** When using the timer and during a semi-automatic cooking, the countdown of the function with less time remaining prevails on the display.

**ATTENTION - MOST IMPORTANT:**
**ELECTRONIC PROGRAMMER DISPLAY CLEANING**
**Strictly follow the information indicated in the chapter "CLEANING AND MAINTENANCE".**

## “TOUCH-CONTROL” KEYS

The “touch-control” keys shall be operated by the fingers (just by touching the key).
When using touch controls it is best to use the ball of your finger rather than the tip.
Program and menu selection: after starting the procedure, the selection is automatically deactivated after approx. 5 seconds from the last touch on the display.

## SETTING THE CLOCK

When connecting for the first time, or after a power failure, the word “OFF” flashes on the display and the “ ” symbol is lit. Adjust the time touching the “**+**” or “**—**” key.
**Important: The oven does not operate, in manual cooking, without first having set the clock.**

To change the time with the appliance already installed, touch the “ ” key for more than 2 seconds, then touch it again until the “ ” symbol flashes. Then adjust the time, within 5 seconds, using the “**+**” or “**—**”.
**Important: It is not possible to adjust the clock if a cooking program is in progress.**

## USING THE TIMER

You can use the timer at any time, even when the oven is not in use.
**ATTENTION - MOST IMPORTANT: This is only an alarm that DOES NOT switch off the oven or grill.**
**REMEMBER TO TURN OFF THE OVEN/GRILL MANUALLY.**

The timer can be set for a maximum time of 23 hours and 59 minutes.

1. To set the timer, with the appliance already connected, touch the “ ” key (several times) until the “ ” symbol flashes on the display. Set the time (increase in minutes) within 5 seconds using the “**+**” or “**—**”. key. At the end of the adjustment the display shows the countdown.
2. At the end of the count, the timer starts beeping and the “ ”symbol flashes on the display. Touch any key to turn off the acoustic signal that would otherwise stop after 7 minutes.
3. Turn the oven off manually (switch and thermostat knobs in the off position) if you do not wish to continue with manual cooking.

To reset the timer in operation at any time:

1A. <u>Only timer function active (no semi-automatic or automatic cooking in progress)</u>: touch the “ ” key for 3 seconds.

1B. With semi-automatic or automatic cooking in progress: touch the key several times " " until the " " symbol flashes on the display. Then touch the "—" key within 5 seconds until " 00:00 " appears on the display.

2. The time of day is shown on the display.

## SEMI-AUTOMATIC COOKING

This is used to automatically switch off the oven after the desired cooking time has elapsed.
Check the clock shows the correct time.
The semi-automatic cooking program can be set for a maximum period of 10 hours.

1. Select the function and temperature (function and temperature knobs). The oven will come on.
2. Touch the " " key until the " " symbol flashes on the display. Set the cooking time (increase in minutes - consider the preheating time, if necessary) within 5 seconds using the "+" or "—". At the end of the adjustment the display shows the countdown.
3. At the end of the count the oven turns off, the timer starts beeping, the " " symbol flashes and the word "**End**" appears on the display.
4. Turn the temperature and function knobs to the off position.
5. Touch the " " key to deactivate the acoustic signal (which otherwise will stop after 7 minutes) and to return the programmer to manual mode (the time is shown on the display). If instead the acoustic signal is deactivated with one of the other keys, after deactivation also touch the " " key to return the programmer to manual mode (the time is shown on the display).

To cancel the semi-automatic cooking program at any time:

1A. Only semi-automatic cooking function active (no timer in use): touch the " " key for 3 seconds, the " " symbol and the word "**End**" are shown on the display.

1B. With active timer: touch the " " key several times until the " " symbol flashes. Then touch the "—" key within 5 seconds until " 00:00 " appears on the display, replaced after a few seconds by the " " symbol and the word "**End**".

2. Touch the " " key again to return the programmer to manual mode (the time of day is shown on the display). If cooking is finished turn the temperature and function knobs to the off position, otherwise continue cooking and then remember to turn the oven off manually.

**ATTENTION - VERY IMPORTANT (SEMI-AUTOMATIC COOKING):**
**If a very short power interruption occurs, the oven keeps the programming.**
**If the interruption is instead longer than a few tens of seconds, the semi-automatic cooking is cancelled. In this case, turn the temperature and function knobs to the off position and restart programming if necessary.**

## USER PREFERENCES SETTINGS

## PROGRAMMER 'TOUCH CONTROL' PANEL KEY LOCK

This function is used to prevent the accidental touch of the programmer selection keys and to avoid unintentionally activating or modifying its functions.
The key lock can be activated at any time, with a cooking in progress or with the oven off.
To lock:

- Touch the " " key for more than 2 seconds until the " " indicator light starts flashing. Then touch the "+" key to activate the key lock, the word "**On**", appears on the display, wait a few seconds until the operation is completed. When this function is active, the " " indicator light is on.

To unlock:

- Touch the " " key for more than 2 seconds until the " " indicator light starts flashing. Then touch the "—" key to deactivate the key lock, the word "**OFF**" appears on the display, wait a few seconds until the operation is completed. When this function is not active, the " " indicator light is off.

## ACOUSTIC SIGNAL TONE SETTING

It is possible to select three sound tones.

- Touch the " " key for more than 2 seconds, then touch the same key several times until the " " symbol flashes.
- Touch the "**+**" or "**—**"; key; the display shows the tone set ("**b-01**", "**b-02**" or "**b-03**").
- The last tone displayed remains active.

## SCREEN BRIGHTNESS SETTING

It is possible to select three brightness levels.

- Touch the " " key for more than 2 seconds, then touch the same key several times until the " " symbol flashes.
- Touch the "**+**" or "**—**"; key; the display shows the brightness set ("**d-01**", "**d-02**" or "**d-03**").
- The last brightness displayed remains active.

## TIME FORMAT

It is possible to choose the 24 hour or 12 hour clock format.

- To activate the 12 hour format, touch the "**+**", key for more than 5 seconds until the " AM " or " PM " symbol is activated.
- To activate the 24 hour format, touch the "**+**", key for more than 5 seconds until the " AM " or " PM " symbol is deactivated.

# 10 CLEANING AND MAINTENANCE

## GENERAL ADVICE

- **Before you begin cleaning, you must ensure that the appliance is switched off at the cooker switch.**
- The periodical lubrication of the gas taps must be done only by specialized personnel.
- If a tap becomes stiff, do not force; contact your local After Sales Service Centre.
- It is advisable to clean when the appliance is cold and especially when cleaning the enamelled parts.
- Avoid leaving alkaline or acidic substances (lemon juice, vinegar, etc.) on the surfaces.
- **Avoid using cleaning products with a chlorine or acidic base.**
- **Important: The use of suitable protective clothing/gloves is recommended when handling or cleaning this appliance.**
- **Under no circumstances should any external covers be removed for servicing or maintenance except by suitable qualified personnel.**

**WARNING:**
**When correctly installed, your product meets all safety requirements laid down for this type of product category.**
**However special care should be taken around the rear or the underneath of the appliance as these areas are not designed or intended to be touched and may contain sharp or rough edges, that may cause injury.**

**Important: The manufacturer declines all liability for possible damage caused by the use of unsuitable products to clean the appliance.**

**Attention!**
**The appliance gets very hot, mainly around the cooking areas. It is very important that children are not left alone in the kitchen when you are cooking.**

**Do not use a steam cleaner because the moisture can get into the appliance thus make it unsafe.**

**Do not use harsh abrasive cleaners or sharp metal scrapers to clean the oven door glass since they can scratch the surface, which may result in shattering of the glass.**

## CLEANING

- **Stainless steel hob:** Spillage on the hob can usually be removed by a damp soapy cloth. More obstinate stains can be removed by using a proprietary stainless steel cleaning product that does not contain chlorine or acidic base.
- **Control panel facia:** Clean very carefully with water and neutral soap; the cloth used must be rinsed well and must be free of any cleaning chemicals to avoid damaging any screen print on the facia.
- **Door, glass & painted surfaces:** Clean very carefully with water and neutral soap; the cloth used must be rinsed well and must be free of any cleaning chemicals.
- **Pan stands & burner caps:** Clean with a sponge and soapy water or proprietary cream cleaner. Always dry throughly. DO NOT PUT IN THE DISHWASHER.
- **Burner bodies (aluminium alloy):** They should be cleaned with soapy water and a clean cloth. For stubborn stains a proprietary cream or stainless steel cleaner may be used; however to maintain an uniform finish we would recommend the whole area is cleaned. NOTE: Please ensure the slots/ castlellations are kept free of the any material/ cleaner. DO NOT PUT BURNER BODIES INTO A DISHWASHER AS THIS MAY TURN THEM BLACK.
- **Inside of oven:** The oven should always be cleaned after use when it has cooled down. The cavity should be cleaned using a mild detergent solution and warm water. Suitable proprietary chemical cleaners may be used only on enamel after first consulting the instructions supplied with the oven cleaner and testing a small sample on the oven cavity. Abrasive cleaning agents or scouring pads/cloths should not be used on the cavity surface.

  **NOTE:** The manufacturers of this appliance will accept no responsibility for damage caused by chemical or abrasive cleaning.

  **Let the oven cool down and pay special attention not to touch the hot heating elements inside the oven cavity.**

## ENAMELLED PARTS

All the enamelled parts must be cleaned with a sponge and soapy water or other non-abrasive products.
Dry preferably with a microfibre or soft cloth.
Acidic substances like lemon juice, tomato sauce, vinegar etc. can damage the enamel if left too long.

## STAINLESS STEEL, ALUMINIUM PARTS, PAINTED AND SILK-SCREEN PRINTED SURFACES

Clean using an appropriate product.

Always dry thoroughly.

IMPORTANT: these parts must be cleaned very carefully to avoid scratching and abrasion. You are advised to use a soft cloth and neutral soap.

## INSIDE OF OVEN

The oven should always be cleaned after use when it has cooled down.
The cavity should be cleaned using a mild detergent solution and warm water.
Suitable proprietary chemical cleaners may be used after first consulting with the manufacturers recommendations and testing a small sample of the oven cavity. Abrasive cleaning agents or scouring pads/cloths should not be used on the cavity surface.

**NOTE:** The manufacturers of this appliance will accept no responsibility for damage caused by chemical or abrasive cleaning.

**Let the oven cool down and pay special attention no to touch the hot heating elements inside the oven cavity.**

**Fire risk! Do not store flammable material in the oven.**

## ELECTRONIC PROGRAMMER DISPLAY CLEANING (some models only)

Clean the programmer display using a soft cloth, warm water and neutral soap, or a soft cloth with a liquid detergent (non-abrasive).
When cleaning, be careful to move the cloth in one direction only.
Then wipe the display with a damp cloth and dry it with a soft cloth.

**IMPORTANT:**
**DO NOT use chlorine-based or acid-based cleaning products, abrasive products or non-neutral detergents as they may cause irreparable damage to the surface. DO NOT spray cleaning liquids directly on the programmer display.**

## CLEANING THE CIRCULAR WELL ON THE FLOOR OF THE OVEN

After using the Easy Steam and Idroclean functions, you are advised to clean and dry the circular well on the floor of the oven.
All enamelled parts must be cleaned using a sponge and soapy water or other suitable non-abrasive products.
Dry with a soft cloth.

## GLASS CONTROL PANEL (some models only)

Clean using an appropriate product. Always dry thoroughly.
Do not use harsh abrasive cleaners or sharp metal scrapers to clean the control panel since they can scratch the surface, which may result in shattering of the glass.

## BURNERS AND PAN SUPPORTS

These parts must be cleaned using a sponge and soapy water or other suitable non-abrasive products. Dry with a soft cloth.
**Warning! Not dishwasher safe.**
After cleaning, the burners and their flame spreaders must be well dried and correctly replaced.
It is very important to check that the burner flame spreader and the cap have been correctly positioned. Failure to do so can cause serious problems with correct combustion and may cause irreversible damage to the hob surface.
Check that the electrode "**S**" (figs. 10.1, 10.3) next to each burner is always clean to ensure trouble-free sparking.
Check that the probe "**T**" (figs. 10.1, 10.3) next to each burner is always clean to ensure correct operation of the safety valves.

**Both the probe and ignition plug must be very carefully cleaned.**

**Note: To avoid damage to the electric ignition do not use it when the burners are not in place.**

**Note: Continuous use may cause a change in the glaze around the burners and grids, corresponding to the areas exposed to the heat. This is a natural phenomenon and does not prevent the parts from working properly.**

## CORRECT REPLACEMENT OF THE AUXILIARY, SEMI-RAPID AND RAPID BURNERS

It is very important to check that the burner flame distributor "**F**" and the cap "**C**" have been correctly positioned (see figs. 10.1, 10.2) - failure to do so can cause serious problems with correct combustion and may cause irreversible damage to the hob surface.

## CORRECT REPLACEMENT OF THE DOUBLE RING COMPACT BURNER AND DUAL BURNER

The double ring compact and dual burner must be correctly positioned (see figs. 10.3, 10.4); the burner rib must be enter in their lodgment as shown by the arrow (see figs. 10.3, 10.4).
Then position the cap "**A**" and the ring "**B**" (figs. 10.5, 10.6).
The burner correctly positioned must not rotate (fig. 10.5).
Failure to do so can cause serious problems with correct combustion and may cause irreversible damage to the hob surface.
**IMPORTANT:** the Dual burner flame spreader has a centring pin ("**CP**" in fig. 10.4).

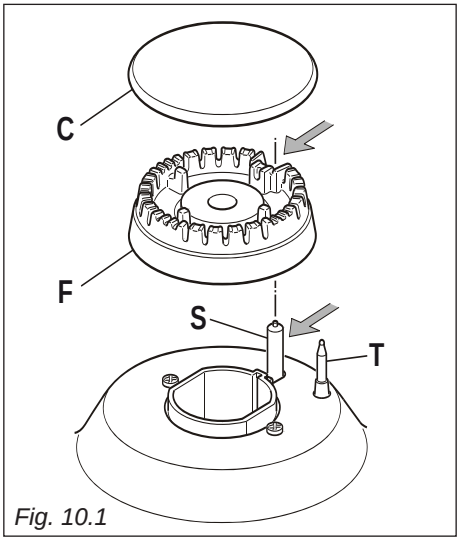

*Fig. 10.1*

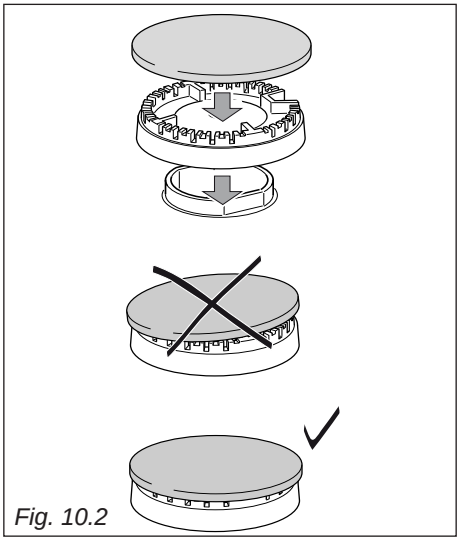
*Fig. 10.2*

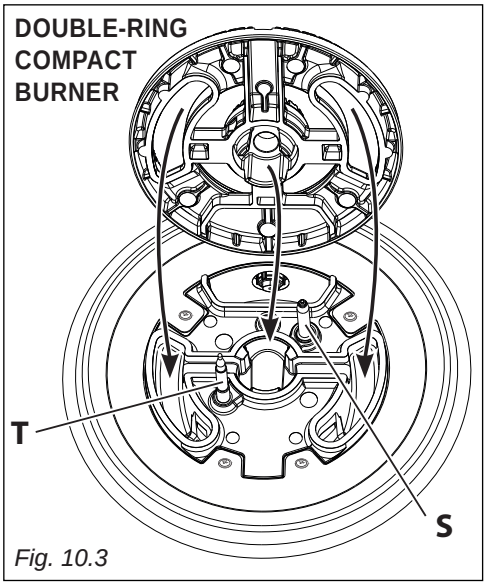

*Fig. 10.3*

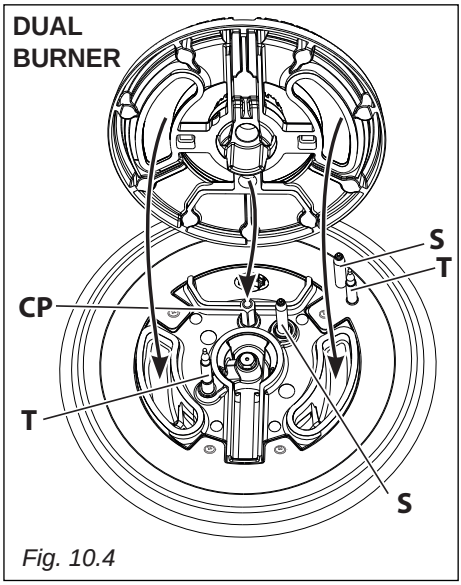

*Fig. 10.4*

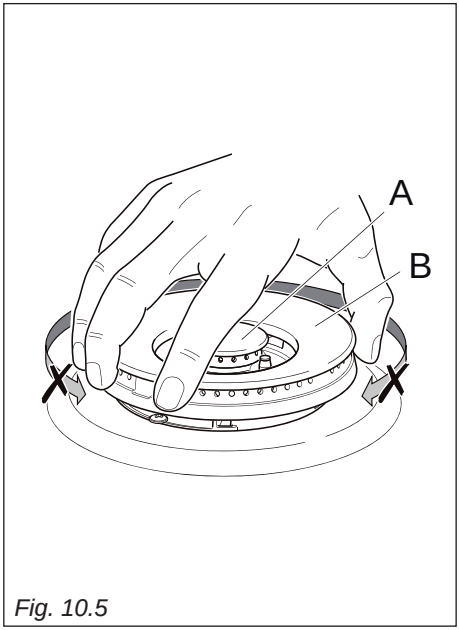

*Fig. 10.5*

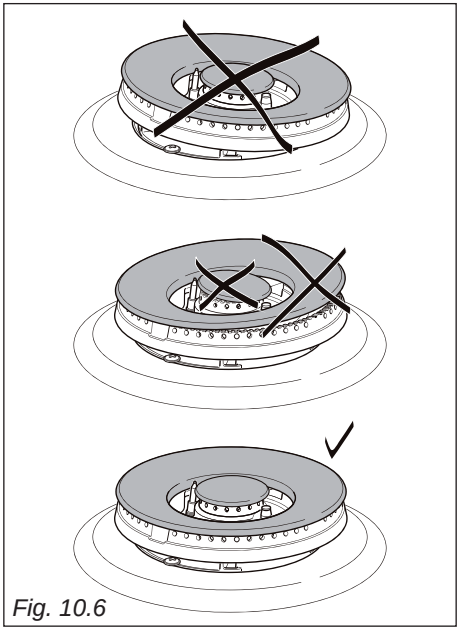
*Fig. 10.6*

# OVEN FITTING OUT

## Assembly of the side runner frames

- Slide the rear prongs of the side rack into the holes "**A**" at the rear of the oven (fig. 8.7a).
- Slide the front prong of the side rack into the holes at the front of the oven (fig. 8.7b).
- Slide in, on the guides, the shelf and the tray (fig. 8.7c).
  The shelf must be fitted so that the safety notch, which stops it sliding out, faces the inside of the oven; the guard rail shall be at the back.
  **Only for the models supplied with Air Fry tray:** The Air Fry tray must be fitted so that the safety notch, which stops it sliding out, faces the inside of the oven (fig. 8.7d).
- To dismantle, operate in reverse order.

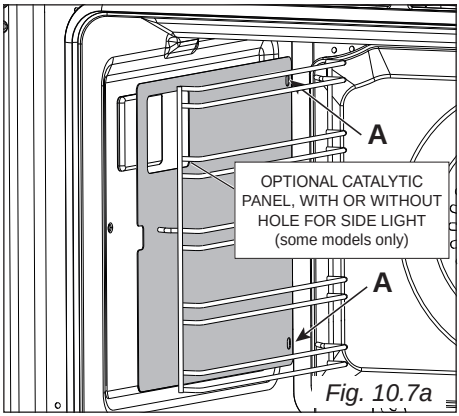

*Fig. 10.7a*

## Fit the catalytic panel to the side rack (some models only)

- Make sure the panels are fitted correctly (with the arrow pointing up and the rear holes aligned with holes "**A**" in the back of the oven): the cut-out in the panel must be placed over the light in the oven (certain models only).
- The panels must be positioned between the inside wall of the oven and the side rack. Once the catalytic panels are in place, securing the side rack will also secure the panels.

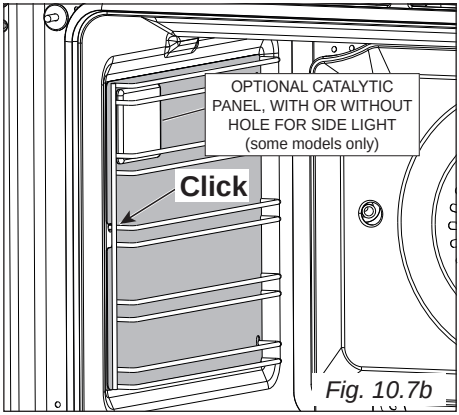

*Fig. 10.7b*

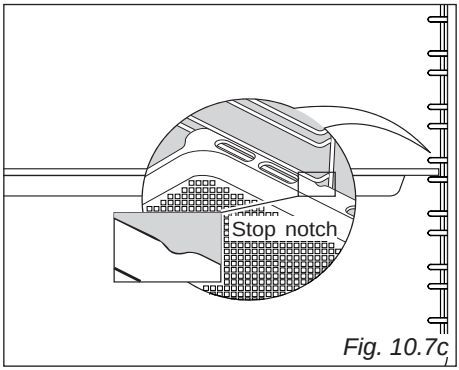

*Fig. 10.7c*

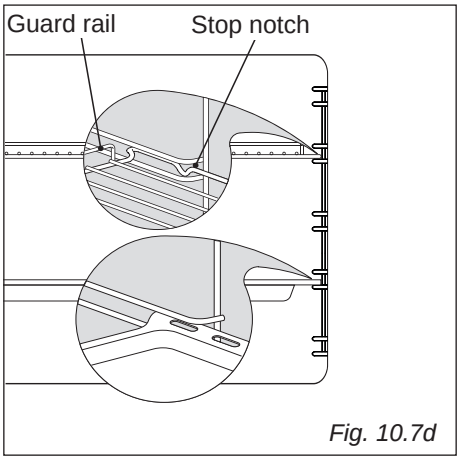

*Fig. 10.7d*

## ADVICE FOR USE AND MAINTENANCE OF CATALYTIC PANELS

The catalytic panels are covered with special microporous enamel which absorbs and does away with oil and fat splashes during normal baking over 200 °C.
If, after cooking very fatty foods, the panels remain dirty, operate the oven “idling” on max temperature for about 30 minutes.
These panels do not require to be cleaned, however it is advised to periodically remove them from the oven (at least the side panels) and to wash them with tepid soapy water and then wipe off with a soft cloth.

**DO NOT CLEAN OR WASH THEM WITH ABRASIVE PRODUCTS OR WITH PRODUCTS CONTAINING ACIDS OR ALKALIS.**

The side panels are reversible and when the catalytic microporous enamel degrades, they can be turned to the other side.

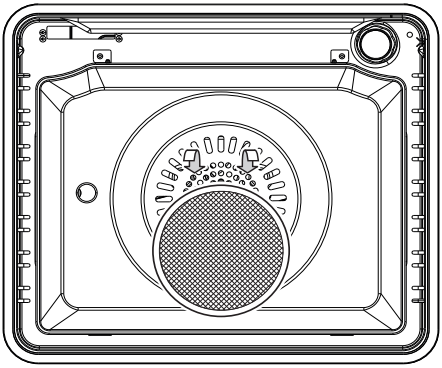

*Fig. 10.8*

## GREASE FILTER (some models only)

- A special screen is provided at the back of the oven to catch grease particles, mainly when meat is being roasted. Slide in the grease filters on the back of the oven as in fig. 10.8.
- When baking pastry etc. this filter should be removed.
- **Clean the filter after any cooking!**
  The grease filter can be removed for cleaning and should be washed regularly in hot soapy water. Always clean the filters after cooking as any solid residues on it might adversely affect the oven performance.
- Always dry the filter properly before fitting it back into the oven.

## IDROCLEAN (some models only)

1. **With the oven cold, remove all accessories**, pour 100 ml of drinking water into the circular well on the floor of the oven and switch on the Idroclean function at 80 - 90 °C.
   Do not use any type of detergent.
   **Models with electronic clock/programmer “Touch-control” only:**
   **VERY IMPORTANT:** After having activated the Idroclean function, do not adjust the temperature before completion of pre-heating. If you wish to adjust it anyway, cancel the program by turning the knobs to the “OFF” position, then set the Idroclean function again with the desired temperature.
2. Run the function for at least 35 minutes, depending on the type of dirt: the moisture generated inside the oven will help remove the dirt.

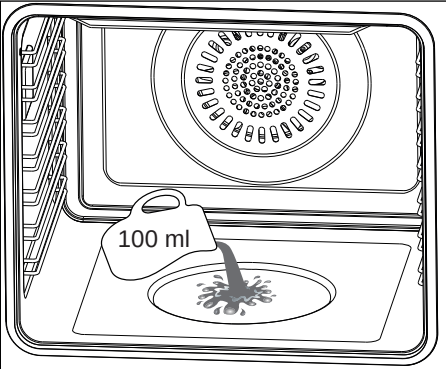


*Fig. 10.9*

3. **Once the oven is completely cold,** wipe the inside of the oven with a damp cloth to remove any residues, and use a soft cloth to wipe any condensation off the inside of the oven or the inside of the door glass.

The Idroclean function provides quick, everyday, detergent-free cleaning, but **is not a substitute for the more thorough cleaning** needed to remove baked-on dirt: for this purpose, clean by hand, using specific products. For best results, the Idroclean function should be used after each cooking cycle.

**CAUTION: Never open the oven door or top up the water in the well on the floor of the oven when the Idroclean function is in operation. Burns hazard!**

## STORAGE COMPARTMENT

The storage compartment is accessible through the pivoting panel (fig. 10.10).

**Do not store flammable material in the oven or in the storage compartment.**

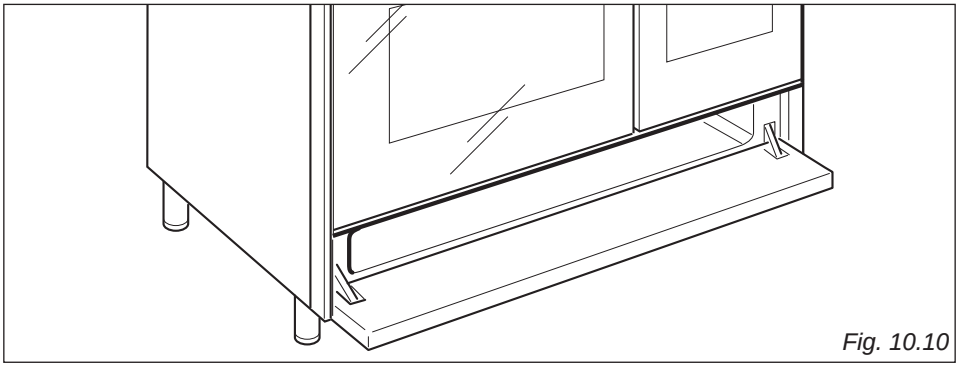

*Fig. 10.10*

## REPLACING THE OVEN LIGHTS

**(NOTE: DEPENDING ON YOUR MODEL, YOUR OVEN MAY ONLY HAVE SOME OF THESE LIGHTS)**

**WARNING: Ensure the appliance is switched off before replacing the lamp to avoid the possibility of electric shock.**

- Let the oven cavity and the heating elements to cool down.
- Switch off the electrical supply.
- Remove the protective cover (fig. 10.11 - 10.12).
- Replace the halogen lamp with a new one suitable for high temperatures having the following specifications: 220 - 240 V ac, 50 - 60 Hz and same power (check watt power as stamped in the bulb itself) of the replaced lamp.
  **IMPORTANT WARNING: Never replace the lamp with bare hands; contamination from your fingers can cause premature failure. Always use a clean cloth or gloves.**
- Refit the protective cover.

**NOTE:** Oven bulb replacement is not covered by your guarantee.

The intended purpose of the lamp, fitted on this appliance, is to illuminate the oven cavity and thus help the user to better monitor the food while cooking. This lamp is not suitable for other usage (e.g. environments lighting).

This product contains a light source of energy efficiency class G.

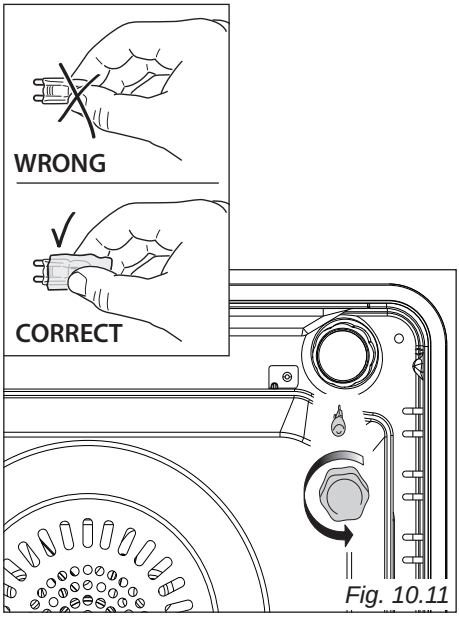

*Fig. 10.11*

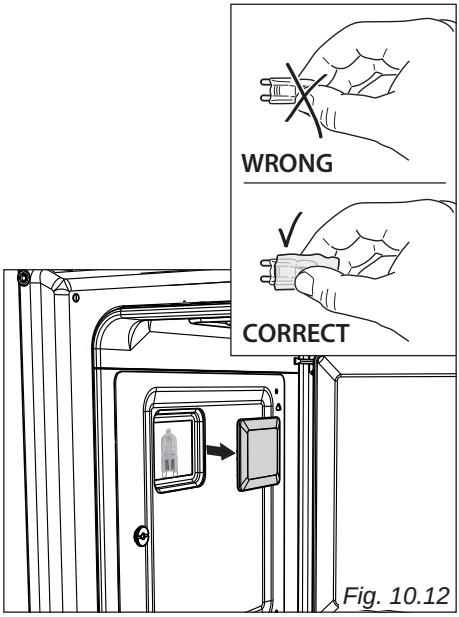

*Fig. 10.12*

## TELESCOPIC SLIDING SHELF SUPPORTS (some models only)

The telescopic sliding shelf supports make it safer and easier to insert and remove the oven shelves and trays. They stop when they are pulled out to the maximum position.

**Important!** When fitting the sliding shelf supports, make sure that you fit:

- The slides to the top wire of a rack. They do not fit on the lower wire.
- The slides so that they run out towards the oven door.
- Both sides of each pair of shelf slides.
- Both sides on the same level.

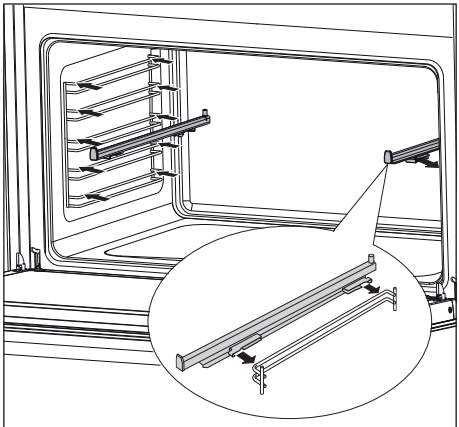

*Fig. 10.13a*

## TO FIX THE SLIDING SHELF SUPPORTS ONTO THE SIDE RACKS:

- Screw the side racks onto the oven wall (and the catalytic liners if supplied - fig. 10.13a).
- Fit the sliding shelf supports onto the top wire of a rack and press (fig. 10.13a). You will hear a click as the safety locks clip over the wire.

**IMPORTANT NOTE: When cooking with the rotisserie DO NOT position the grill tray on the sliding shelf supports.**

To remove the telescopic sliding shelf supports:

- Remove the side racks (and the catalytic liners if supplied) by unscrewing the fixing screws (fig. 10.13a).
- Lay down the sliding shelf support and side racks, with the telescopic sliding shelf support underneath.
- Find the safety locks. These are the tabs that clip over the wire of the side rack (arrow "**1**" in fig. 10.13b).
- Pull the safety locks away from the wire to release the wire (arrow "**2**" in fig. 10.13b).

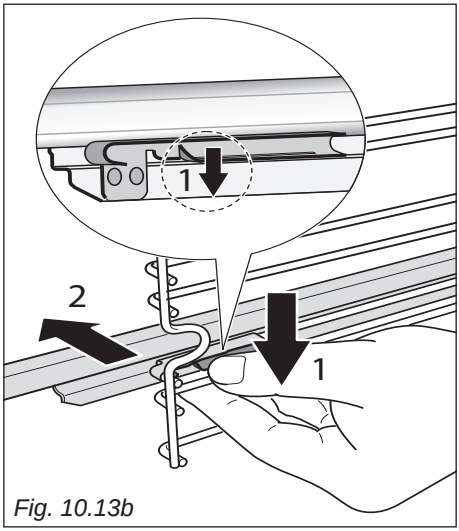


*Fig. 10.13b*

## CLEANING THE SLIDING SHELF SUPPORTS:

- Wipe the supports with a damp cloth and a mild detergent only.
- Do not wash them in the dishwasher, immerse them in soapy water, or use oven cleaner on them.

## REMOVING AND REPLACING THE INNER AND MIDDLE DOOR GLASS PANES FOR CLEANING

If you wish to clean the inner pane of glass of the door, make sure you follow the precautions and instructions very carefully.

Replacing the glass pane and the door incorrectly may result in damage to the appliance and may void your warranty.

## IMPORTANT!

- Take care, the oven door is heavy. If you have any doubts, do not attempt to remove the door.
- Make sure the oven and all its parts have cooled down. Do not attempt to handle the parts of a hot oven.
- Take extreme care when handling the glass pane. Avoid the edges of the glass bumping against any surface. This may result in the glass shattering.
- **CAUTION:**
  Do not use harsh abrasive cleaners or sharp metal scrapers to clean the oven door panes of glass since they can scratch the surface, which may result in shattering of the glass.
- If you notice any sign of damage on any of the glass panes (such as chipping, or cracks), do not use the oven. Call your Authorised Service Centre or Customer Care.
- Make sure you replace the glass pane correctly. Do not use the oven without glass pane correctly in place.
- If the glass pane feels difficult to remove or replace, do not force it. Call your Authorised Repairer or Customer Care for help.
  **Note:** service visits providing assistance with using or maintaining the oven are not covered by your warranty.

## REMOVING THE OVEN DOOR

The oven door can easily be removed as follows:

- Open the door to the full extent (fig. 10.15).
- Open the lever "**A**" completely on the left and right hinges (fig. 10.16).
- Hold the door as shown in fig. 10.14.
- Gently close the door (fig. 10.15) until left and right hinge levers "**A**" are hooked to part "**B**" of the door (fig. 10.17).
- Withdraw the hinge hooks from their location following arrow "**C**" (fig. 10.18).
- Rest the door on a soft surface.

### Important!

Always keep a safe distance from the door hinges, paying special attention to the position of your hands.
If the door hinges are not correctly hooked, they could unhook and close suddenly and unexpectedly with risk of injury.

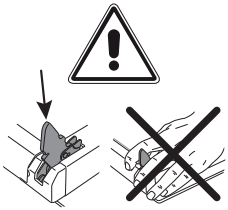

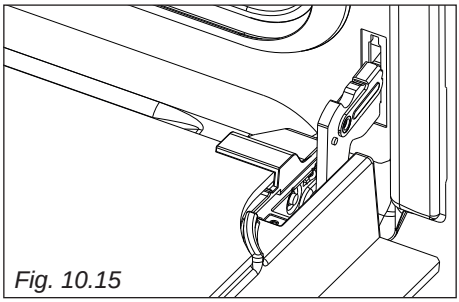

*Fig. 10.15*

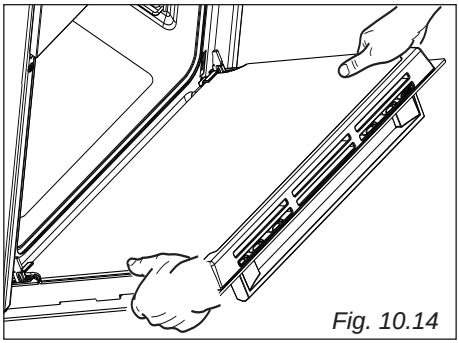

*Fig. 10.14*

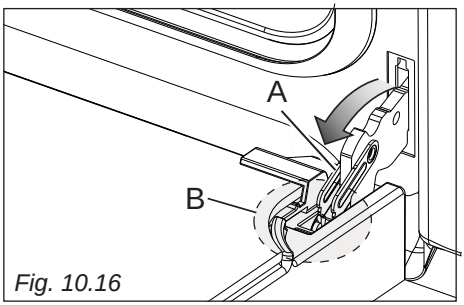


*Fig. 10.16*

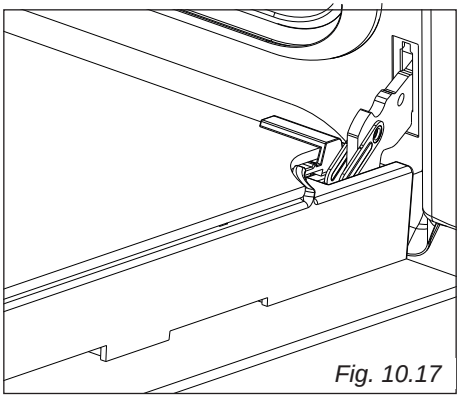

Fig. 10.17

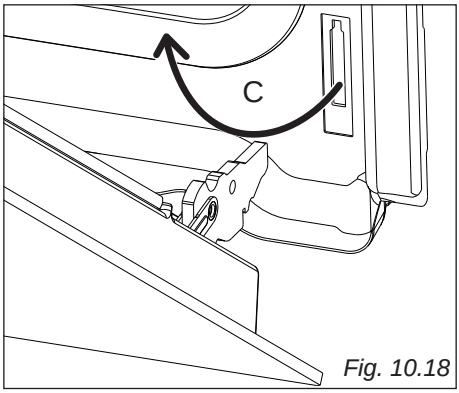


Fig. 10.18

## To remove the inner pane

- Touch the glass retainer tabs in on both sides of the door and remove the glass retainer (fig. 10.19, 10.20).
- Gently lift and pull out the inner pane of glass by releasing it from the bottom retainers. Do not angle the pane too much as you may damage the glass (fig. 10.21).

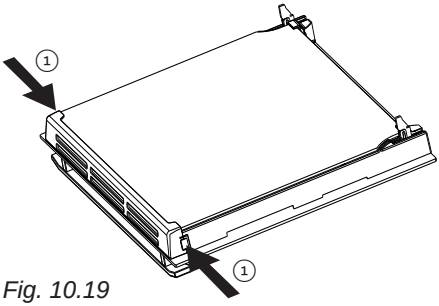


Fig. 10.19

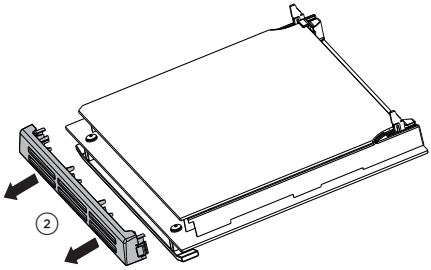


Fig. 10.20

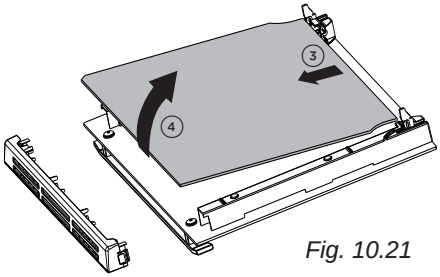


Fig. 10.21

## To remove the middle pane (some models only)

- Gently lift and pull out the middle pane of glass by releasing it from the bottom retaining notches (fig. 10.22).

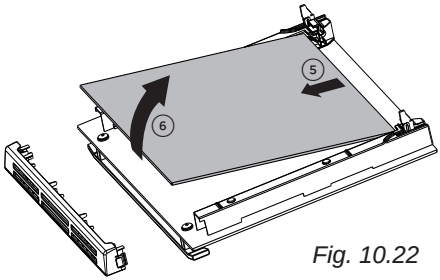


Fig. 10.22

## After cleaning replace the door glass panes

### When replacing the glass panes make sure that:

- you replace the inner pane correctly as shown. The pane must be in the position described below in order to fit into the door and to ensure that the oven operates safely and correctly;
- you take extra care not to bump the edges of the glass against any object or surface
- you do not force any of the panes into place. If you are experiencing difficulties replacing the panes, remove them and start the process again from the beginning. If this still does not help, call Customer Care.

### Replace the middle pane (some models only)

Ensure the pane is the right way up (the warning text should be readable back to front when the pane is fitted correctly).

- Slot the bottom of the pane into the lower notch at the bottom of the door.
- Position the pane by gently lowering it.

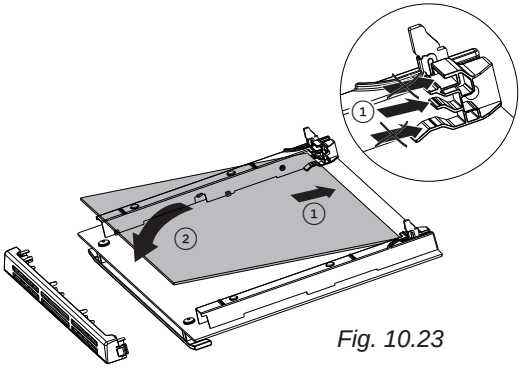


*Fig. 10.23*

### Replace the inner pane

Make sure you fit the glass the right way up, with the bevelled top corner in the correct position.

- Slot the bottom of the pane into the lower notch at the bottom of the door.
- Position the pane by gently lowering it.
- Slide the glass retainer back into place and ensure it is fully clipped securely in place.

  **IMPORTANT!**
  **Make sure the glass retainer is correctly and firmly in place and the glass pane is secure.**

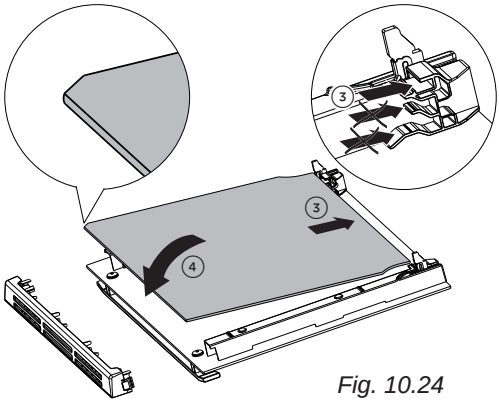


*Fig. 10.24*

# 11 GUARANTEE

Your new **"De' Longhi"** product comes with 12-month guarantee covering all parts and labour.

If your appliance proves to be defective as a result of faulty materials or workmanship during the guarantee period, these parts will be repaired or replaced free of charge.

## AFTER SALES SERVICE

Should you require service, spares or product information and advice:

- Please Telephone 01908 733 010 (Great Britain)
  028 9744 2461 (Northern Ireland - Mon to Fri 9:00am to 5:00pm
  Excluding Bank Holidays)
- Details of your purchase receipt will be required if you require service within the first 12-month of purchase.

1. The rights and benefits under this guarantee are additional to your statutory rights, which are not affected by this guarantee.
2. The manufacturer undertakes within the specified period, to repair or replace free of charge any parts of the appliance found to be defective provided that:
   - We are promptly informed of the defect.
   - The appliance is installed and used in accordance with the written instructions enclosed with the appliance.
   - The appliance is used only on an electrical supply as indicated on the rating label fixed to the appliance.
   - The appliance has not been altered in any way or subject to misuse or repaired by a person other than an authorised service agent.
3. No rights are given under this guarantee to a person acquiring the appliance second hand or for commercial, semi-commercial or communal use.
4. This guarantee applies throughout the UK and Channel Islands.
5. Any repaired or replacement appliances will be guaranteed on these terms for the unexpired portion of the guarantee.

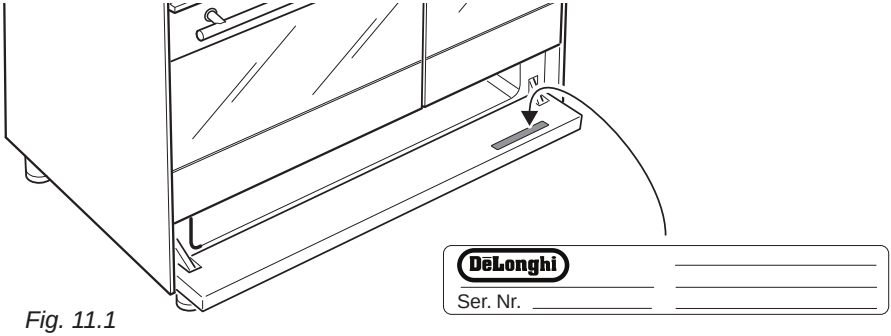


*Fig. 11.1*

Descriptions and illustrations in this booklet are given as simply indicative. The manufacturer reserves the right, considering the characteristics of the models described here, at any time and without notice, to make eventual necessary modifications for their construction or for commercial needs.

www.delonghi-cookers.co.uk

Cod. 1106791 - ß4