

SIEMENS



Built-in oven

CM656GB.6B

[en] Instruction manual

Register your product on My Siemens and discover exclusive services and offers.
siemens-home.bsh-group.com/welcome

The future moving in.

Siemens Home Appliances

Table of contents

Intended use 4

Important safety information 5
General information 5
Microwave 6

Causes of damage 7
General information 7
Microwave 8

Environmental protection 8
Saving energy 8
Environmentally-friendly disposal 9

Getting to know your appliance 10
Control panel 10
Controls 10
Display 10
Operating modes menu 11
Types of heating 11
Further information 12
Cooking compartment functions 12

Accessories 13
Accessories included 13
Inserting accessories 13
Optional accessories 13

Before using for the first time 14
Initial use 14
Cleaning the cooking compartment and accessories 14

Operating the appliance 15
Switching the appliance on and off 15
Starting or interrupting operation 15
Selecting an operating mode 15
Setting the type of heating and temperature 15
Rapid heat up 16

Time-setting options 16
Timer 16
Cooking time 17
End time 17

Childproof lock 18
Activating and deactivating 18

Basic settings 18
Changing settings 18
List of settings 18
Changing the time 18

Microwave 19
Cookware 19
Microwave power settings 19
Setting the microwave combined with a type of heating 19
Setting the microwave 20
Dry 20

Sabbath mode 21
Starting Sabbath mode 21

Cleaning function 21
Before running the cleaning function 21
Setting the cleaning function 21
Once the cleaning function has finished 22

Home Connect 22
Setting up 22
Remote Start 22
Home Connect settings 22
Remote diagnostics 23
About data protection 23
Declaration of Conformity 23

Cleaning agent 23
Suitable cleaning agents 23
Surfaces in the cooking compartment 24
Keeping the appliance clean 24

Rails 25
Detaching and refitting the rails 25

Appliance door 26
Removing the door cover 26
Removing and fitting the door panels 27

Trouble shooting 28
Fault table 28
Maximum operating time exceeded 28
Cooking compartment bulbs 28

Customer service 29
E number and FD number 29

Dishes 29
Information on the settings 29
Selecting a dish 30
Applying settings for dishes 30

Tested for you in our cooking studio 31
Silicone moulds 31
Baking 31
Roasting and braising 34
Grilling 36
Convenience products 39
Microwave 41
Yogurt 43
Eco heating functions 43
Acrylamide in foodstuffs 44
Slow cook 45
Drying 46
Preserving 47
Prove dough 48
Defrosting 48
Heating food in a microwave 49
Keeping warm 51
Test dishes 51

Additional information on products, accessories, replacement parts and services can be found at **www.siemens-home.bsh-group.com** and in the online shop **www.siemens-home.bsh-group.com/eshops**

Intended use

Read these instructions carefully. Only then will you be able to operate your appliance safely and correctly. Retain the instruction manual and installation instructions for future use or for subsequent owners.

This appliance is only intended to be fully fitted in a kitchen. Observe the special installation instructions.

Check the appliance for damage after unpacking it. Do not connect the appliance if it has been damaged in transport.

Only a licensed professional may connect appliances without plugs. Damage caused by incorrect connection is not covered under warranty.

This appliance is intended for domestic use only. The appliance must only be used for the preparation of food and drink. The appliance must be supervised during operation. Only use this appliance indoors.

This appliance is intended for use up to a maximum height of 4000 metres above sea level.

This appliance may be used by children over the age of 8 years old and by persons with reduced physical, sensory or mental capabilities or by persons with a lack of experience or knowledge if they are supervised or are instructed by a person responsible for their safety how to use the appliance safely and have understood the associated hazards.

Children must not play with, on, or around the appliance. Children must not clean the appliance or carry out general maintenance unless they are at least 15 years old and are being supervised.

Keep children below the age of 8 years old at a safe distance from the appliance and power cable.

Always slide accessories into the cooking compartment the right way round.
→ *"Accessories" on page 13*

Important safety information

General information

⚠ Warning – Risk of fire!

- Combustible items stored in the cooking compartment may catch fire. Never store combustible items in the cooking compartment. Never open the appliance door if there is smoke inside. Switch off the appliance and unplug it from the mains or switch off the circuit breaker in the fuse box.
- Loose food remnants, fat and meat juices may catch fire. Before using the appliance, remove the worst of the food remnants from the cooking compartment, heating elements and accessories.
- A draught is created when the appliance door is opened. Greaseproof paper may come into contact with the heating element and catch fire. Do not place greaseproof paper loosely over accessories during preheating. Always weight down the greaseproof paper with a dish or a baking tin. Only cover the surface required with greaseproof paper. Greaseproof paper must not protrude over the accessories.

⚠ Warning – Risk of burns!

- The appliance becomes very hot. Never touch the interior surfaces of the cooking compartment or the heating elements. Always allow the appliance to cool down. Keep children at a safe distance.
- Accessories and ovenware become very hot. Always use oven gloves to remove accessories or ovenware from the cooking compartment.
- Alcoholic vapours may catch fire in the hot cooking compartment. Never prepare food containing large quantities of drinks with a high alcohol content. Only use small quantities of drinks with a high alcohol content. Open the appliance door with care.

⚠ Warning – Risk of scalding!

- The accessible parts become hot during operation. Never touch the hot parts. Keep children at a safe distance.
- When you open the appliance door, hot steam can escape. Steam may not be visible, depending on its temperature. When opening, do not stand too close to the appliance. Open the appliance door carefully. Keep children away.
- Water in a hot cooking compartment may create hot steam. Never pour water into the cooking compartment when the cooking compartment is hot.

⚠ Warning – Risk of injury!

- Scratched glass in the appliance door may develop into a crack. Do not use a glass scraper, sharp or abrasive cleaning aids or detergents.
- The hinges on the appliance door move when opening and closing the door, and you may be trapped. Keep your hands away from the hinges.

⚠ Warning – Risk of electric shock!

- Incorrect repairs are dangerous. Repairs may only be carried out and damaged power cables replaced by one of our trained after-sales technicians. If the appliance is defective, unplug the appliance from the mains or switch off the circuit breaker in the fuse box. Contact the after-sales service.
- The cable insulation on electrical appliances may melt when touching hot parts of the appliance. Never bring electrical appliance cables into contact with hot parts of the appliance.
- Do not use any high-pressure cleaners or steam cleaners, which can result in an electric shock.
- A defective appliance may cause electric shock. Never switch on a defective appliance. Unplug the appliance from the mains or switch off the circuit breaker in the fuse box. Contact the after-sales service.

⚠ Warning – Hazard due to magnetism!

Permanent magnets are used in the control panel or in the control elements. They may affect electronic implants, e.g. heart pacemakers or insulin pumps. Wearers of electronic implants must stay at least 10 cm away from the control panel.

Microwave

⚠ Warning – Risk of fire!

- Using the appliance for anything other than its intended purpose is dangerous and may cause damage.
  The following is not permitted: drying out food or clothing, heating slippers, grain or cereal pillows, sponges, damp cleaning cloths or similar.
  For example, heated slippers and grain or cereal pillows may catch fire, even several hours after they have been heated.The appliance must only be used for the preparation of food and drinks.
- Food may catch fire. Never heat food in heat-retaining packages.
  Do not leave food heating unattended in containers made of plastic, paper or other combustible materials.
  Do not select a microwave power or time setting that is higher than necessary. Follow the information provided in this instruction manual.
  Never use the microwave to dry food.
  Never defrost or heat food with a low water content, e.g. bread, at too high a microwave power or for too long.
- Cooking oil may catch fire. Never use the microwave to heat cooking oil on its own.

⚠ Warning – Risk of explosion!

Liquids and other food may explode when in containers that have been tightly sealed. Never heat liquids or other food in containers that have been tightly sealed.

⚠ Warning – Risk of burns!

- Foods with peel or skin may burst or explode during, or even after, heating. Never cook eggs in their shells or reheat hard-boiled eggs. Never cook shellfish or crustaceans. Always prick the yolk when baking or poaching eggs. The skin of foods that have a peel or skin, such as apples, tomatoes, potatoes and sausages, may burst. Before heating, prick the peel or skin.
- Heat is not distributed evenly through baby food. Never heat baby food in closed containers. Always remove the lid or teat. Stir or shake well after the food has been heated. Check the temperature of the food before it is given to the child.
- Heated food gives off heat. The ovenware may become hot. Always use oven gloves to remove ovenware or accessories from the cooking compartment.
- Airtight packaging may burst when food is heated. Always observe the instructions on the packaging. Always use oven gloves to remove dishes from the cooking compartment.
- The accessible parts become very hot when in operation. Never touch hot parts. Keep children at a safe distance.
- At the highest settings in microwave only mode, the drying function will automatically switch on an additional heating element to heat the cooking compartment. Never touch the inside surfaces of the cooking compartment or the heating elements while they are hot. Keep children at a safe distance.
- Using the appliance for anything other than its intended purpose is dangerous.
  You are not permitted to use it to dry food or clothing or to warm slippers, grain or cereal pillows, sponges, damp cleaning cloths or the like.
  This is because, for instance, overheated slippers, grain or cereal pillows, sponges and damp cleaning cloths, etc., may cause burns to the skin.

⚠ Warning – Risk of scalding!

- There is a possibility of delayed boiling when a liquid is heated. This means that the liquid reaches boiling temperature without the usual steam bubbles rising to the surface. Even if the container only vibrates a little, the hot liquid may suddenly boil over and spatter. When heating, always place a spoon in the container. This will prevent delayed boiling.

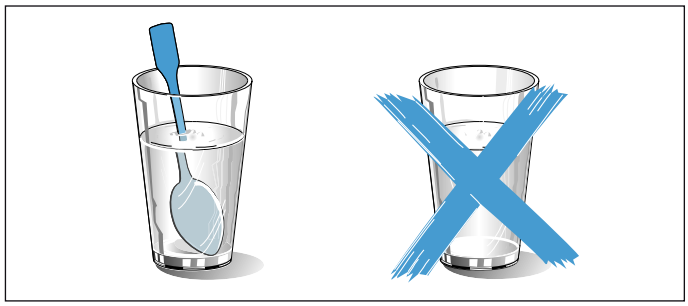

⚠ Warning – Risk of injury!

- Unsuitable ovenware may crack. Porcelain or ceramic ovenware can have small perforations in the handles or lids. These perforations conceal a cavity below. Any moisture that penetrates this cavity could cause the ovenware to crack. Only use microwave-safe ovenware.

- If using the appliance in microwave mode only, placing cookware and containers made of metal or featuring metal detailing inside the appliance may cause sparks when the appliance is operating. This may damage the appliance. Never use metal containers when using the appliance in microwave mode only.

⚠Warning – Risk of electric shock!
The appliance is a high-voltage appliance. Never remove the casing.

⚠Warning – Risk of serious damage to health!

- The surface of the appliance may become damaged if it is not cleaned properly. Microwave energy may escape. Clean the appliance on a regular basis, and remove any food residue immediately. Always keep the cooking compartment, door seal, door and door stop clean.
- Microwave energy may escape if the cooking compartment door or the door seal is damaged. Never use the appliance if the cooking compartment door, the door seal or the plastic door frame is damaged. Call the after-sales service.
- Microwave energy will escape from appliances that do not have any casing. Never remove the casing. For any maintenance or repair work, contact the after-sales service.

Causes of damage

General information

Caution!

- Accessories, foil, greaseproof paper or ovenware on the cooking compartment floor: do not place accessories on the cooking compartment floor. Do not cover the cooking compartment floor with any sort of foil or greaseproof paper. Do not place ovenware on the cooking compartment floor if a temperature of over 50 °C has been set. This will cause heat to accumulate. The baking and roasting times will no longer be correct and the enamel will be damaged.
- Aluminium foil: Aluminium foil in the cooking compartment must not come into contact with the door glass. This could cause permanent discolouration of the door glass.
- Water in a hot cooking compartment: do not pour water into the cooking compartment when it is hot. This will cause steam. The temperature change can cause damage to the enamel.
- Moisture in the cooking compartment: Over an extended period of time, moisture in the cooking compartment may lead to corrosion. Allow the cooking compartment to dry after use. Do not keep moist food in the closed cooking compartment for extended periods of time. Do not store food in the cooking compartment.
- Cooling with the appliance door open: Following operation at high temperatures, only allow the cooking compartment to cool down with the door closed. Do not trap anything in the appliance door. Even if the door is only left open a crack, the front of nearby furniture may become damaged over time. Only leave the cooking compartment to dry with the door open if a lot of moisture was produced whilst the oven was operating.
- Fruit juice: when baking particularly juicy fruit pies, do not pack the baking tray too generously. Fruit juice dripping from the baking tray leaves stains that cannot be removed. If possible, use the deeper universal pan.
- Extremely dirty seal: If the seal is very dirty, the appliance door will no longer close properly during operation. The fronts of adjacent units could be damaged. Always keep the seal clean. Never operate the appliance if the seal is damaged or missing.
- Appliance door as a seat, shelf or worktop: Do not sit on the appliance door, or place or hang anything on it. Do not place any cookware or accessories on the appliance door.
- Inserting accessories: depending on the appliance model, accessories can scratch the door panel when closing the appliance door. Always insert the accessories into the cooking compartment as far as they will go.
- Carrying the appliance: do not carry or hold the appliance by the door handle. The door handle cannot support the weight of the appliance and could break.

Microwave

Caution!

- Creation of sparks: Metal – e.g. a spoon in a glass – must be kept at least 2 cm from the cooking compartment walls and the inside of the door. Sparks can irreparably damage the glass on the inside of the door.
- Combining accessories: Do not combine the wire rack with the universal pan. Sparks may be created if they are inserted directly on top of one another. Only insert them into their own shelf level.
- Microwave only: The universal pan and baking tray are unsuitable when using the microwave only. If you use either of these, this may create sparks, which may damage the cooking compartment. Place cookware on the wire rack provided, or place it in the microwave and set a type of heating.
- Foil containers: Do not use foil containers in the appliance. They damage the appliance by producing sparks.
- Operating the microwave without food: Operating the appliance without food in the cooking compartment may lead to overloading. Never switch on the microwave unless there is food inside. The short crockery test is the exception to this rule.
  → *"Microwave" on page 19*

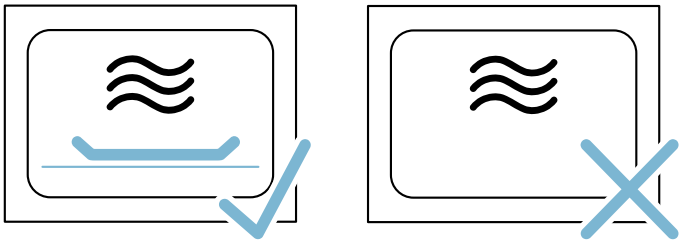

- Microwave popcorn: Never set the microwave output too high. Use a maximum microwave output of 600 watts. Always place the popcorn bag on a glass plate. The door panels may jump if overloaded.

This appliance corresponds to the standards EN 55011 and CISPR 11. It is a Group 2, Class B product.

Group 2 means that microwaves are produced for the purpose of heating food. Class B states that the appliance is suitable for private households.

Environmental protection

Your new appliance is particularly energy-efficient. Here you can find tips on how to save even more energy when using the appliance, and how to dispose of your appliance properly.

Saving energy

- Only preheat the appliance if this is specified in the recipe or in the tables in the operating instructions.
- Leave frozen food to defrost before placing it in the cooking compartment.

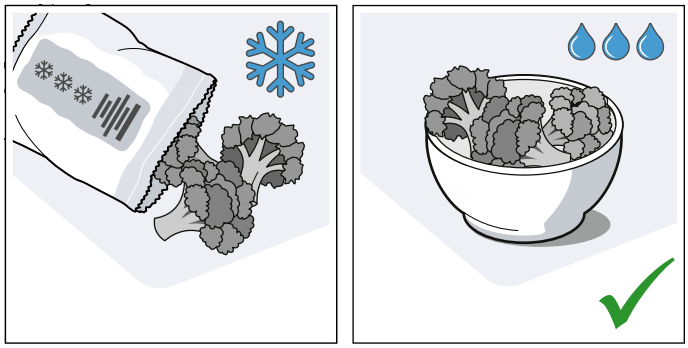

- Use baking tins that are dark-coloured, painted black or have an enamel coating. These absorb the heat particularly well.

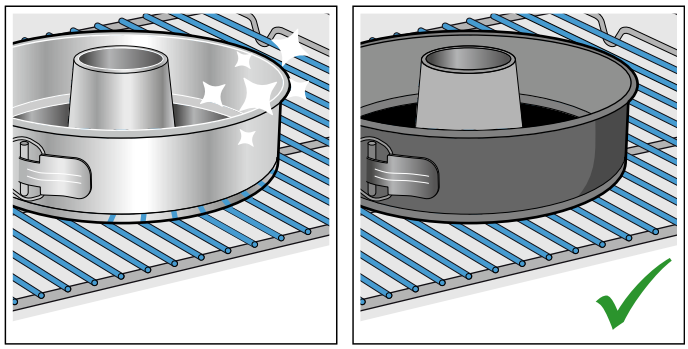

- Remove any unnecessary accessories from the cooking compartment.

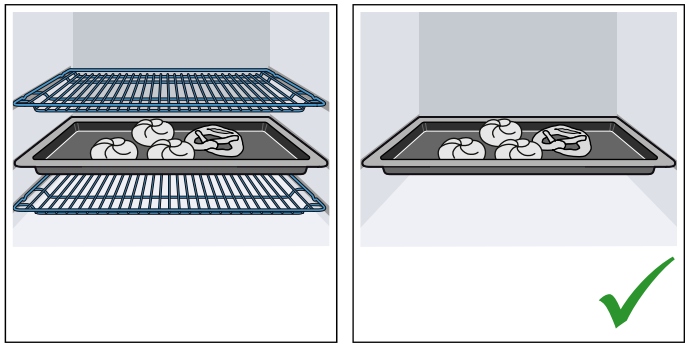

- Open the appliance door as infrequently as possible when the appliance is in use.

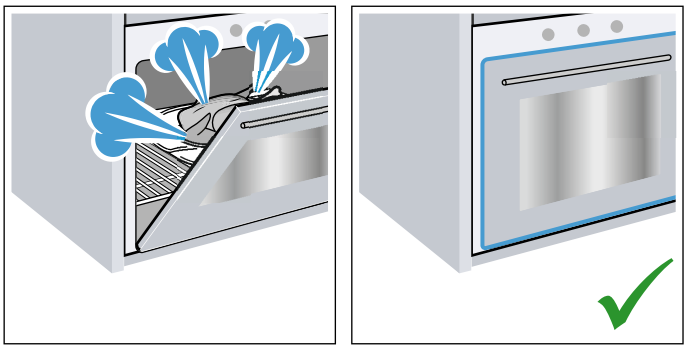

- It is best to bake several cakes one after the other. The cooking compartment stays warm. This reduces the baking time for the second cake. You can place two cake tins next to each other in the cooking compartment.

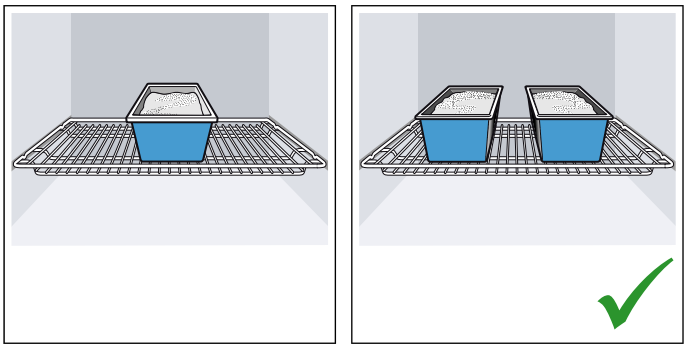

- For longer cooking times, you can switch the appliance off 10 minutes before the end of the cooking time and use the residual heat to finish cooking.

Environmentally-friendly disposal

Dispose of packaging in an environmentally-friendly manner.



This appliance is labelled in accordance with European Directive 2012/19/EU concerning used electrical and electronic appliances (waste electrical and electronic equipment - WEEE). The guideline determines the framework for the return and recycling of used appliances as applicable throughout the EU.

Getting to know your appliance

In this section, we will explain the indicators and controls. You will also find out about the various functions of your appliance.

Note: Depending on the appliance model, individual details and colours may differ.

Control panel

In the control panel, you can use the various buttons and the rotary selector to set the required function of the appliance. The current settings are shown on the display.

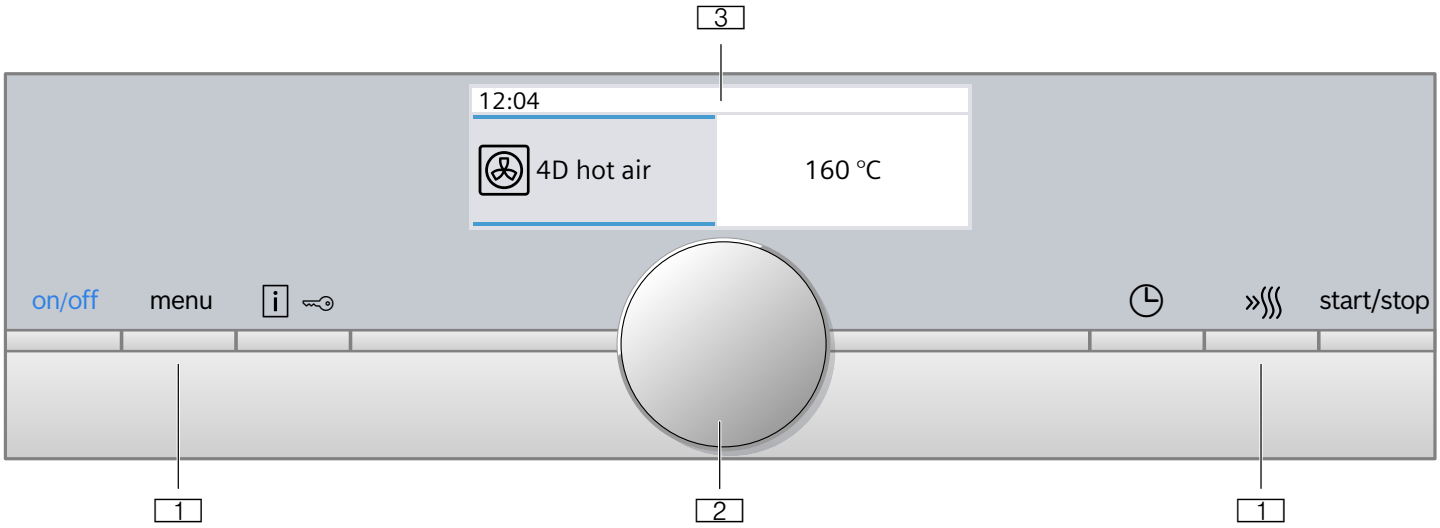

1 **Buttons**
The buttons to the left and right of the rotary selector have a pressure point. Press these buttons to activate them.

2 **Rotary selector**
You can turn the rotary selector clockwise and anti-clockwise.

3 **Touch display**
You can see the current adjustment values, options or notes in the touch display. To implement settings, touch the appropriate text field. The text fields change depending on the selection.

Controls

The individual controls are adapted for the various functions of your appliance. You can set your appliance simply and directly.

Buttons

Here you can find a short explanation of the various buttons.

Buttons		Meaning
on/off		Switches the appliance on and off
menu	Menu	Opens the operating modes menu
i 🔑	Information Childproof lock	Displays notes Activates/deactivates the child-proof lock
🕒	Time-setting options	Opens the time-setting options menu
»≋	Rapid heat up	Switches rapid heat up on and off
Start/Stop		Starts, pauses or cancels operation

Rotary selector

Use the rotary selector to change the adjustment values shown in the display.

In most selection lists, e.g. types of heating, the first selection follows the last. For temperature, for example, you must turn the rotary selector back when the minimum or maximum temperature is reached.

Display

The display is structured so that the information can be read at a glance.

The value that you can currently set is in focus. It is displayed in white lettering with a dark background.

Status bar

The status bar is at the top of the display. The time and set time functions are displayed here.

Progress line

The progress line shows you how much the oven has already heated up or how much time has elapsed, for example. The straight line below the in-focus value progresses from left to right, the longer the operation continues to run.

Countdown

If you have started your appliance without a cooking time, you can see how long the operation has already been running for at the top right in the status bar.

If you had set a cooking time and it was deleted, the countdown applies the time that has already elapsed and continues to count down from this time. You can therefore always check how long the operation has already been running.

Temperature indicator

The temperature indicator bars show the heating phases or residual heat in the cooking compartment.

Heating indicator	The heating indicator displays the rising temperature in the cooking compartment. When all bars are filled, the optimum time for placing the dish in the oven has been reached. The bars do not appear when settings are applied for grilling and cleaning.
Residual heat indicator	When the appliance is switched off, the temperature indicator shows the residual heat in the cooking compartment. Once the temperature has dropped to approximately 60 °C, the display goes out.

Note: Due to thermal inertia, the temperature displayed may be slightly different to the actual temperature inside the oven. You can use the i button to check the current heating temperature when heating up.

Operating modes menu

The menu is divided into different operating modes. In this way, you can quickly access the required function.

Operating mode	Use
Types of heating	There are several finely tuned types of heating for you to prepare your dishes.
Dishes ⟶ *"Dishes" on page 29*	Here you can find preprogrammed setting values which are suitable for many dishes.
Microwave ⟶ *"Microwave" on page 19*	Using the microwave you can cook, heat up or defrost your dishes more quickly.
Microwave combination ⟶ *"Microwave" on page 19*	Using microwave combination, you can activate a type of heating in addition to the microwave.
Dry ⟶ *"Microwave" on page 19*	Use after every microwave operation.
Cleaning function ⟶ *"Cleaning function" on page 21*	The cleaning function cleans your oven almost automatically.
Settings ⟶ *"Basic settings" on page 18*	You can adapt your appliance's basic settings to suit your needs.
HomeConnect ⟶ *"Home Connect" on page 22*	This function allows you to connect your oven with a mobile device.

Types of heating

In order for you to find the correct type of heating for your dish, we have explained the differences and scopes of application here.

When cooking at very high temperatures, the appliance lowers the temperature slightly after an extended period.

Types of heating		Temperature	Use
	4D hot air	30-275 °C	For baking and roasting on one or more levels. The fan distributes the heat from the ring heating element in the back panel evenly around the cooking compartment.
	Top/bottom heating	30-300 °C	For traditional baking and roasting on one level. Especially suitable for cakes with moist toppings. Heat is emitted evenly from above and below.
	Hot air eco	30-275 °C	For gently cooking selected types of food on one level without preheating. The fan distributes the heat from the ring-shaped heating element in the back panel around the cooking compartment. This heating function is most effective between 125 and 275 °C. This heating function is used to measure both the energy consumption in air recirculation mode and the energy efficiency class.
	Top/bottom heating eco	30-300 °C	For gently cooking selected types of food on one level. Heat is emitted from above and below. This heating function is most effective between 150 and 250 °C. This heating function is used to measure the energy consumption in the conventional mode.
	Hot air grilling	30-300 °C	For roasting poultry, whole fish and larger pieces of meat. The grill heating element and the fan switch on and off alternately. The fan circulates the hot air around the food.

	Grill, large area	Grill settings: 1 = low 2 = medium 3 = high	For grilling flat items such as steaks, sausages or bread, and for browning food. The whole area of the grill heating element becomes hot.
	Grill, small area	Grill settings: 1 = low 2 = medium 3 = high	For grilling small quantities of food such as steaks, sausages or bread, and for browning food. The centre part under the grill heating element becomes hot.
	Pizza setting	30-275 °C	For preparing pizza and dishes which require a lot of heat from underneath. The bottom heating element and the ring heating element in the back panel heat up.
	Slow cooking	70-120 °C	For gentle and slow cooking of seared, tender pieces of meat in ovenware without a lid. The heat is emitted evenly from the top and bottom at low temperatures.
	Bottom heating	30-250 °C	For cooking in a bain marie and for the final baking stage. The heat is emitted from below.
	Keeping warm	60-100 °C	For keeping cooked food warm.
	Preheating ovenware	30-70 °C	For preheating ovenware.
	CoolStart function	30-275 °C	For the quick preparation of frozen products on level 1. The temperature depends on the manufacturer's instructions. Use the highest temperature specified on the packaging. The cooking time is as specified or shorter. Preheating is not required.

Default values

For each type of heating, the appliance specifies a default temperature or level. You can accept this value or change it in the appropriate area.

Further information

In most cases, the appliance provides notes and further information on the action just carried out. To do this, press the i button. The note is shown for a few seconds.

Some notes are displayed automatically, for example as confirmation, or to provide an instruction or warning.

Cooking compartment functions

Some functions make your appliance easier to use. This, for example, enables the cooking compartment to be well lit and a cooling fan to prevent the appliance from overheating.

Opening the appliance door

If you open the appliance door during an operation, the operation is paused. The operation resumes when you close the door.

Note: When using the Microwave operating mode, you must touch the start/stop button once the door has been closed to resume the operation. You can change the basic setting for this.

Interior lighting

When you open the appliance door, the interior lighting switches on. If the door remains open for longer than 15 minutes, the lighting switches off again.

For most operating modes, the interior lighting switches on as soon as the operation is started. When the operation has finished, the lighting switches off.

Note: You can set the interior lighting not to come on during the operation in the basic settings.

Cooling fan

The cooling fan switches on and off as required. The hot air escapes above the door.

Caution!

Do not cover the ventilation slots. Otherwise the oven will overheat.

So that the cooking compartment cools down more quickly after operation, the cooling fan continues to run for a certain period afterwards.

Note: You can change how long the cooling fan continues to run for in the basic settings. → *"Basic settings" on page 18*

Accessories

Your appliance is accompanied by a range of accessories. Here, you can find an overview of the accessories included and information on how to use them correctly.

Accessories included

Your appliance is equipped with the following accessories:

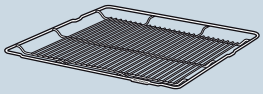

Wire rack
For ovenware, cake tins and ovenproof dishes.
For roasts, grilled items and frozen meals.
The wire rack is suitable for use in the microwave.

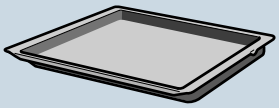

Universal pan
For moist cakes, pastries, frozen meals and large roasts.
It can be used to catch dripping fat when you are grilling directly on the wire rack.

Only use original accessories. They are specially adapted for your appliance.

You can buy accessories from the after-sales service, from specialist retailers or online.

Note: The accessories may deform when they become hot. This does not affect their function. Once they have cooled down again, they regain their original shape.

Microwave

Only the wire rack provided is suitable when using the microwave only. If you use the universal pan or the baking tray, this may create sparks, which may damage the cooking compartment.

When using the appliance in combination with the microwave or "Dishes" mode, you can use the universal pan, baking tray or any other accessories that have been included with the appliance.

Inserting accessories

The cooking compartment has three shelf positions. The shelf positions are counted from the bottom up.

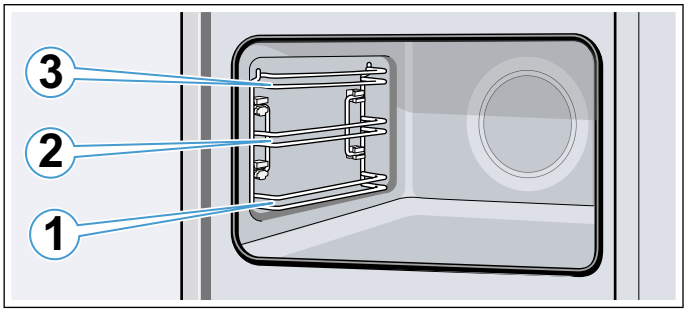

When using positions 1, 2 and 3, always insert the accessory between the two guide rods for a shelf position.

Notes

- Ensure that you always insert the accessories into the cooking compartment the right way round.
- Always insert the accessories fully into the cooking compartment so that they do not touch the appliance door.

Locking function

The accessories can be pulled out approximately halfway until they lock in place. The locking function prevents the accessories from tilting when they are pulled out. The accessories must be inserted into the cooking compartment correctly for the tilt protection to work properly.

When inserting the wire rack, ensure that the lug **a** is at the rear and is facing downwards. The word "microwave" must be at the front and the curvature must be facing downwards ⌣.

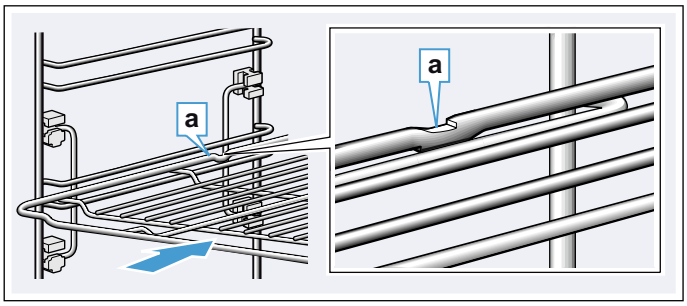

When inserting baking trays, make sure that the recess **a** is at the rear and is facing downwards. The sloping edge of the accessory **b** must be facing towards the appliance door.

Example in the picture: universal pan

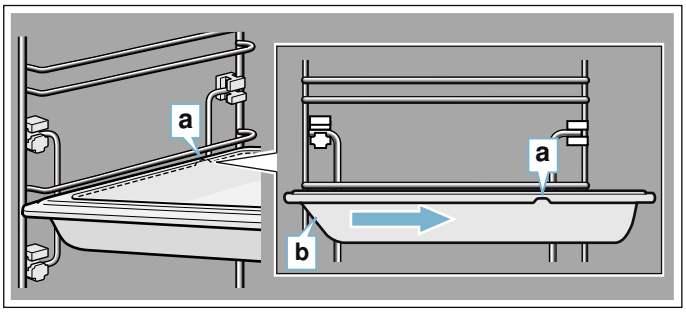

Optional accessories

You can buy optional accessories from the after-sales service, from specialist retailers or online. *You will find a comprehensive range of products for your appliance in our brochures and online.

Both availability and whether it is possible to order online differ between countries. Please see your sales brochures for more details.

Note: Not all optional accessories are suitable for every appliance. When purchasing, please always quote the exact identification number (E-no.) of your appliance.
→ *"Customer service" on page 29*

Special accessories
Wire rack For ovenware, cake tins and ovenproof dishes, and for roasts and grilled food.
Universal pan For moist cakes, pastries, frozen meals and large roasts. It can be used to catch dripping fat when you are grilling directly on the wire rack.
Baking tray For tray bakes and small baked products.
Wire insert For meat, poultry and fish. For inserting into the universal pan to catch dripping fat and meat juices.
Universal pan, non-stick For moist cakes, pastries, frozen meals and large roasts. Pastries and roasts can be removed more easily from the universal pan.
Baking tray, non-stick For tray bakes and small baked products. The pastries can be removed more easily from the baking tray.
Profi pan For preparing large quantities.
Lid for the Profi pan The lid turns the Profi pan into a Profi roasting dish.
Pizza tray For pizzas and large round cakes.
Grill tray Use for grilling in place of the wire rack or as a splatter guard.Only use in the universal pan.
Bread-baking stone For home-made bread, bread rolls and pizzas that require a crispy base. The baking stone must be preheated to the recommended temperature.
Glass roasting dish For stews and bakes. Particularly suitable for the "Meals" operating mode.
Glass tray For large roasts, moist cakes and bakes.
Glass tray For bakes, vegetable dishes and baked goods.
Decorative trims For concealing the lower shelf of the unit and the base of the appliance.

Before using for the first time

Before you can use your new appliance, you must make some settings. You must also clean the cooking compartment and accessories.

Initial use

After connecting the appliance to the power or following a power cut, the settings for initial use are shown in the display.

Note: You can change these settings at any time in the basic settings. ⟶ *"Basic settings" on page 18*

Setting the language

German is the preset language.

1. Use the rotary selector to select the required language.
2. Touch the > arrow.
   The next setting appears.

Setting the time

The time starts at 12:00.

1. Use the rotary selector to set the current time.
2. Touch the > arrow

Setting the date

The default date is "1.1.2014".

1. Use the rotary selector to set the current day, month and year.
2. Touch the > arrow until you have updated all settings.
   A note appears in the display confirming that the initial use has been completed.

With HomeConnect

1. Touch "Set using the assistant".
2. Further instructions can be found in section
   ⟶ *"Home Connect" on page 22*

Cleaning the cooking compartment and accessories

Before using the appliance to prepare food for the first time, you must clean the cooking compartment and accessories.

Cleaning the cooking compartment

To remove the new-appliance smell, heat up the cooking compartment when empty and with the oven door closed.

Make sure that there is no leftover packaging, such as polystyrene pellets, in the cooking compartment and remove the adhesive tape that is in or on the appliance. Before heating the appliance, wipe the smooth surfaces in the cooking compartment with a soft, wet cloth. Keep the kitchen ventilated while the appliance is heating.

Apply the settings indicated.

Settings	
Type of heating	4D Hotair
Temperature	maximum
Cooking time	1 hour

You can find out how to set the type of heating and the temperature in the next section.

Switch off the appliance after the cooking time indicated using the On/Off button.

After the cooking compartment has cooled down, clean the smooth surfaces with soapy water and a dish cloth.

Cleaning the accessories

Clean the accessories thoroughly using soapy water and a dish cloth or soft brush.

Operating the appliance

You have already learnt about the controls and how they work. Now we will explain how to set your appliance. You will learn about what happens when you switch the appliance on and off, and how to select the operating mode.

Switching the appliance on and off

Before you are able to set the appliance, you must switch it on.

Exception: The childproof lock and the timer can be set when the appliance is switched off.
Displays or information, e.g the residual heat indicator in the cooking compartment, remain visible in the display after the appliance has been switched off.

Switch off your appliance when you do not need to use it. If no settings are applied for a long time, the appliance switches itself off automatically.

Switching the appliance on

Use the On/Off button to switch the appliance on.
The on/off symbol above the button is illuminated in blue.

The Siemens logo appears in the display, and then a type of heating and a temperature.

Note: You can specify which operating modes should appear after the appliance is switched on in the basic settings.

Switching off the appliance

Use the On/Off button to switch off the appliance.
The lighting above the button goes out.

A set function is cancelled.

The time appears in the display.

Note: You can set whether or not the time should be displayed when the appliance is switched off in the basic settings.

Starting or interrupting operation

To start operation or to interrupt an operation which has started running, press the Start/Stop button. The cooling fan may continue to run after an operation is interrupted.

Press the On/Off button to delete all settings.

If you open the cooking compartment door during operation, operation is interrupted. Close the cooking compartment door to continue operation.

Selecting an operating mode

When you select an operating mode, the appliance must be switched on.

1. Press the menu button.
   The operating modes menu opens.
2. Touch the required operating mode.
   Depending on the operating mode, different options are available.
3. Use the rotary selector to change the selection.
   Depending on the selection, change further settings.
4. Use the start/stop button to start.
   The elapsed time appears in the display. The settings and progress line can be seen.

Setting the type of heating and temperature

After the appliance is switched on, the set suggested type of heating appears with the temperature. You can start this setting immediately with the start/stop button. If you want to set another type of heating, proceed as follows.

For other settings, you can change the values as follows:

Example in the picture: Top/bottom heating at 180 °C.

1. Set the type of heating using the rotary selector.

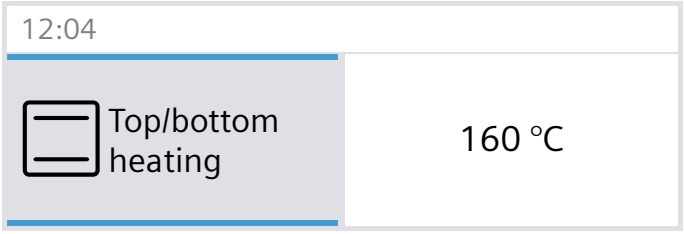

2. Touch the suggested temperature.
3. Use the rotary selector to change the temperature.

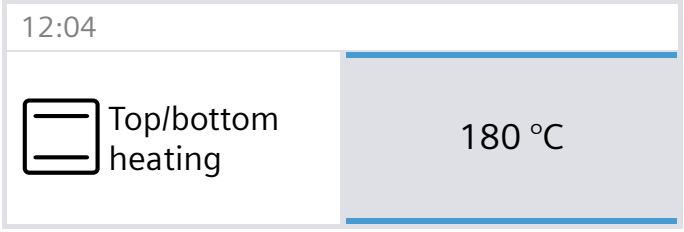

4. Use the start/stop button to start.

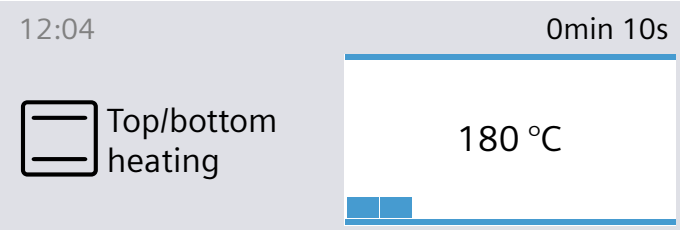

The set type of heating and the temperature are shown in the display.

Rapid heat up

You can use the »⦚ button to heat up the cooking compartment particularly quickly.
The rapid heat up function is not possible for all types of heating.

Suitable types of heating:

	4D hot air
	Top/bottom heating

To ensure an even cooking result, do not place your food and the accessory in the cooking compartment until rapid heating is complete.

Making settings

Ensure you have selected a suitable type of heating. The temperature must be set to above 100 °C, otherwise the rapid heating function cannot be started.

1. Set the type of heating and temperature.
2. Press the »⦚ button.



The »⦚ symbol appears on the left next to the temperature. The temperature indicator starts to fill in.

When rapid heating is complete, a signal sounds. The »⦚ symbol goes out. Place your dish in the cooking compartment.

Notes

- If a cooking time has been set, this runs independently of rapid heating and counts down immediately when the operation is started.
- You can use the ⓘ button to check the current cooking compartment temperature during rapid heating.

Cancelling

Press the »⦚ button. The »⦚ symbol disappears from the display.

Time-setting options

Your appliance has different time-setting options.

Time-setting option		Use
🔔	Timer	The timer functions like an egg timer. An audible signal sounds once the set time has elapsed.
|→|	Cooking time	A signal sounds once a set cooking time has elapsed. The appliance switches off automatically.
→|	End time	Set a cooking time and an end time. The appliance switches off automatically so that the operation ends at the desired time.

Notes

- A cooking time of up to one hour can be set exactly to the minute.
  A cooking time over one hour can be set in five-minute increments.
- Depending on which direction you turn the rotary selector, the cooking time starts at a default value:
  Anti-clockwise, 10 minutes,
  Clockwise, 30 minutes.
- After a time-setting option has elapsed, a signal sounds and "Finished" appears in the status bar.
- Using the ⓘ button, you can request information during the operation, which then appears briefly in the display.

Timer

You can set the timer at any time, even if the appliance is switched off. It runs parallel to the other time settings and has a separate audible signal. In this way, you can tell whether it is the timer or a cooking time which has elapsed.
The maximum setting you can apply is 24 hours.

1. Press the ◷ button.
   The field for the timer opens.
2. Use the rotary selector to set the timer duration.
   The timer starts after a few seconds.

The 🔔 symbol for the timer and the time counting down are displayed on the left in the status bar.

When the time has elapsed

An audible signal sounds. "Timer elapsed" appears in the display. Use the ◷ button to cancel the audible signal early.

Cancelling the timer duration

Press the ◷ button to open the time-setting options menu and turn the time back. Press the ◷ button to close the menu.

Changing the timer duration

Use the ◷ button to open the time-setting options menu and change the timer time in the next few seconds using the rotary selector. Start the timer with the ◷ button.

Cooking time

If you set the cooking time for your meal, the operation stops automatically once this time has elapsed. The oven stops heating.

Prerequisite: A type of heating and a temperature have been set.

For example: Setting for 4D hot air, 180 °C, cooking time 45 minutes.

1. Press the ◷ button.
   The time-setting options menu opens.

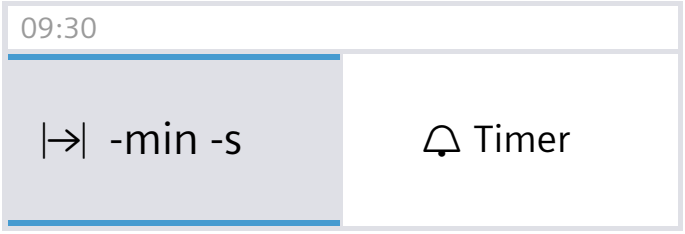

2. Set the cooking time using the rotary selector.

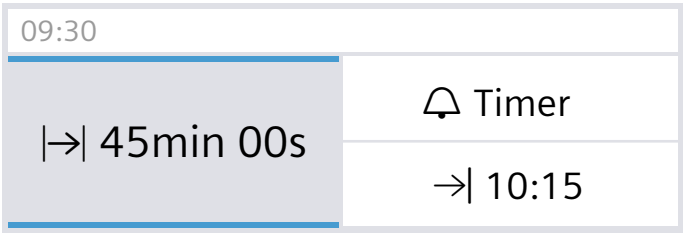

3. Press the Start/Stop button to start.
   You can see the |→| cooking time counting down in the status bar.

The cooking time has elapsed

A signal sounds. The oven stops heating. "Finished" appears in the status bar. You can cancel the audible signal early using the ◷ button.

Cancelling the cooking time

Press the ◷ button to open the time-setting options menu. Turn the time back. The type of heating and temperature set are shown in the display.

Changing the cooking time

Press the ◷ button to open the time-setting options menu. Change the cooking time using the rotary selector.

End time

If you change the end time, please remember that easily spoiled foods must not be allowed to remain in the cooking compartment for too long.

Prerequisite: The selected operation has not already begun. A cooking time has been set. The time-setting options menu ◷ is open.

Example in the picture: You put the dish in the cooking compartment at 9:30. It takes 45 minutes to cook and will be ready at 10:15, but you would like it to be ready at 12:45 instead.

1. Touch the "End →|" field.
   The end time is displayed.

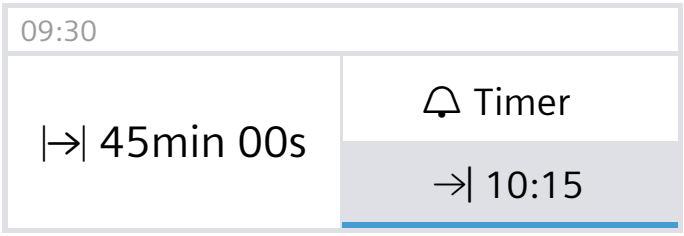

2. Using the rotary selector, set a later end time.

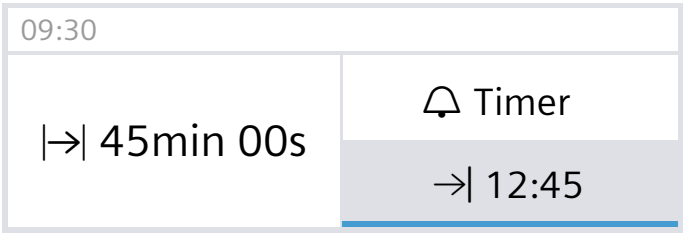

3. Confirm with the Start/Stop button.

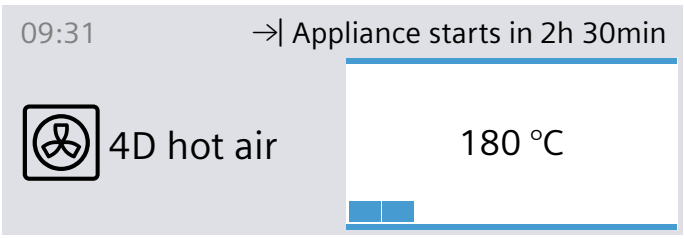

The oven is in standby. The operation starts at the appropriate time. You can see the cooking time counting down in the status bar.

The cooking time has elapsed

A signal sounds. The oven stops heating. "Finished" appears in the status bar. You can cancel the audible signal early using the ◷ button.

Correcting the end time

This is possible if the oven is in standby. Use the ◷ button to open the time-setting options menu, touch "End →|" and use the rotary selector to correct the end time. Press the ◷ button to close the menu.

Cancelling the end time

This is possible if the oven is on standby. To do so, open the time-setting options menu using the ◷ button. Touch "End →|" and reset the End time using the rotary selector. The cooking time immediately starts to count down.

Childproof lock

Your appliance is equipped with a childproof lock so that children cannot switch it on accidentally or change any settings.

The control panel is locked and no settings can be made. The appliance can only be switched off using the on/off button.

Activating and deactivating

You can activate and deactivate the childproof lock when the appliance is switched on or off.

In each case, press the button for approx. 4 seconds. A confirmation note appears in the display and the symbol appears in the status bar.

Basic settings

There are various settings available to you in order to help use your appliance effectively and simply. You can change these settings as required.

Changing settings

1. Press the On/Off button.
2. Press the menu button.
   The operating modes menu opens.
3. Select the "Settings" operating mode.
   The first basic setting appears and can be changed using the rotary selector.
4. Touch the > arrow.
5. Use the rotary selector to change the values.
6. Use the > arrow to switch to the next basic settings.
7. Press the menu button to save.
   "Save" or "Discard" appears on the display.

List of settings

This list tells you all the basic settings and how to change them. Depending on the model of the appliance you own, the display will show only those settings that apply to your appliance.

You can change the following settings:

Setting	Options
Select language	Additional languages possible
Time of day	Sets the current time
Date	Sets the current date
Audible signal duration	Short (30 s)
	Medium (1 m)
	Long (5 m)
Button tone	Switched off (button tone still sounds when switching on/off using the "On/off" button)
	Switched on
Display brightness	Can be adjusted to one of five different levels
Clock display	Digital with date
	Analogue
	Off
Lighting	On during operation
	Off during operation
Continue automatically	When closing the door
	Do not continue automatically (press the Stop/Start button)
Operation after switching on	Main menu
	Types of heating
	Microwave
	Microwave combination
	Dishes*
Warning: Baking tray in MW	Display
	Do not display
Night-time dimming	Switched off
	Switched on (display dimmed between 10 p.m. and 5.59 a.m.)
Brand name logo	Display
	Do not display
Dry microwave	On
	Off
Fan run-on time	Recommended
	Minimum
Sabbath mode	Switched on
	Switched off
Home Connect	Switches Wi-Fi on or off ⟶ *"Home Connect" on page 22*
Factory settings	Restore

*) Included, depending on appliance model

Note: Changes to the language, button tone and display brightness settings take effect immediately. All other changes take effect after the settings have been saved.

Changing the time

You can change the time in the basic settings.

For example: Changing from summer to winter time.

1. Press the On/Off button.
2. Press the menu button.
   The operating modes menu opens.
3. Touch "Settings".
4. Use the > arrow to switch to "Clock".
5. Use the rotary selector to change the time.
6. Press the menu button.
   "Save" or "Discard" appears on the display.

Power cut

Following a long power cut, the settings for initial use are shown in the display.

Reset the language, time and date.

Microwave

You can use the microwave to cook, heat up or defrost food quickly. The microwave can be used on its own, or in combination with a type of heating.

To ensure optimum use of the microwave, please observe the notes on cookware and familiarise yourself with the data in the application tables at the end of the instruction manual.

Cookware

Not all cookware is suitable for microwaves. To ensure that your food is heated and the appliance is not damaged, only use cookware that is suitable for microwaves.

Heat-resistant cookware made of glass, glass ceramic, porcelain or heat-resistant plastic is suitable. These materials allow microwaves to pass through. You can also use ceramic if it has been fully glazed and has no cracks.

You can also use serving dishes. This saves you having to transfer food from one dish to another. You should only use cookware with decorative gold or silver trim if the manufacturer guarantees that they are suitable for use in microwaves.

To bake in combined operation, you can use ordinary metal baking tins. This means that the cake is also browned from below.
Metal dishes are not suitable for other applications. Metal does not allow microwaves to pass through. Food in covered metal containers will remain cold.

Caution!

Creation of sparks: Metal (e.g. a spoon in a glass) must be kept at least 2 cm from the cooking compartment walls and the inside of the door. Sparks may irreparably damage the glass on the inside of the door.

Cookware test

Never switch on the microwave unless there is food inside. The short cookware test is the only exception to this rule.

Perform the following test if you are unsure whether your cookware is suitable for use in the microwave.

1. Heat the empty cookware at maximum power for ½ to 1 minute.
2. Check the temperature of the cookware during this time.

The cookware should remain cold or warm to the touch.

The cookware is unsuitable if it becomes hot or sparks are generated.
In this case, stop the test.

⚠ Warning – Risk of burns!

The accessible parts become very hot when in operation. Never touch hot parts. Keep children at a safe distance.

Accessories included

Only the wire rack provided is suitable when using the microwave only. If you use the universal pan or the baking tray, this may create sparks, which may damage the cooking compartment.

When using the appliance in combination with the microwave or "Dishes" mode, you can use the universal pan, baking tray or any other accessories that have been included with the appliance.

When using the microwave, it is best to insert accessories at level 1, unless otherwise specified.

Microwave power settings

A variety of microwave power settings that are suitable for different types of food and food preparation are available.

A cooking time must always be set to operate the microwave. You can either apply the default cooking time or adjust it in the relevant menu.

Setting	Food	Maximum cooking time
90 W	For defrosting delicate foods	1 hr 30 mins
180 W	For defrosting and continued cooking	1 hr 30 mins
360 W	For cooking meat and for heating delicate foods	1 hr 30 mins
600 W	For heating and cooking food	1 hr 30 mins
Max.	For heating liquids	30 mins

The maximum setting is designed for heating liquids only; it is not designed for heating food. To protect the appliance, the maximum power of the microwave is gradually reduced to 600 W during the first few minutes. Full power is made available again after a cooling period.

Setting the microwave combined with a type of heating

Not all types of heating are suitable for combining with the microwave.
You can set output settings from 90 W to 360 W.

Suitable types of heating:

	4D hot air
	Top/bottom heating
	Hot air grilling
	Grill, large area
	Grill, small area

1. Press the menu button.
   The operating modes menu opens.
2. Select the "Microwave combination" field.

A type of heating, temperature, microwave output setting and cooking time are suggested.
3. Touch the appropriate field and use the rotary selector to set the required values.
4. Press the Start/Stop button to start.
The cooking time starts counting down.

You can change the values at any time. To do so, touch the appropriate field and use the rotary selector to change the values.

The cooking time has elapsed

A signal sounds. The microwave operation has finished. |→| 0 min 00 s appears in the display end "Finished" appears in the status bar. You can cancel the audible signal before it has finished by pressing the ◷ button. If you want to set a microwave output setting again, touch the appropriate field and enter a cooking time. The operation starts again.

Pausing the operation

Press the start/stop button: The oven is paused. Press the start/stop button again; the operation continues.

Open the appliance door: The operation is interrupted. After closing the door: The operation continues.

Cancelling the operation

Press the On/Off button.

Setting the microwave

To achieve optimum results with the microwave, always insert the wire rack at shelf position 1.

1. Press the Menu button.
The Operating Modes menu opens.
2. Select the "Microwave" field.
A microwave output setting and cooking time are suggested.
3. Use the rotary selector to set the microwave output setting and/or cooking time.
4. Start the microwave using the Start/Stop button.

The cooking time starts counting down.

You can change the values at any time. To do so, touch the appropriate field and use the rotary selector to change the values.

To prevent condensation from forming when the appliance is in microwave only mode, the appliance will automatically switch on an additional heating element when it is set to 600 W or "Max.". The cooking compartment and the accessories will become hot. The cooking result is not affected by this.

Note: You can switch this function off in the basic settings. ⟶ *"Basic settings" on page 18*

⚠ Warning – Risk of burns!
At the highest settings in microwave only mode, the drying function will automatically switch on an additional heating element to heat the cooking compartment. Never touch the inside surfaces of the cooking compartment or the heating elements while they are hot. Keep children at a safe distance.

The cooking time has elapsed

A signal sounds. The microwave operation has finished. |→| 0 min 00 s appears in the display end "Finished" appears in the status bar. You can cancel the audible signal before it has finished by pressing the ◷ button. If you want to set a microwave output setting again, touch the appropriate field and enter a cooking time. The operation starts again.

Pausing the operation

Press the start/stop button: The oven is paused. Press the start/stop button again; the operation continues.

Open the appliance door: The operation is interrupted. After closing the door, press the start/stop button. The operation continues.

Note: If you have altered the basic setting, make sure that the microwave does not resume operation without food inside. ⟶ *Page 18*

⚠ Warning – Risk of burns!
The accessible parts become very hot when in operation. Never touch hot parts. Keep children at a safe distance.

Cancelling the operation

Press the On/Off button.

Dry

With the "Dry" operating mode, the cooking compartment is heated up and the moisture in the cooking compartment evaporates. Use the drying function after every microwave operation.

1. Press the menu button.
The operating modes menu opens.
2. Select the "Dry" operating mode.
3. Press the Start/Stop button to start.
The drying function starts and ends automatically after 10 minutes.

Open the appliance door for 1 to 2 minutes so that the moisture can escape.

Caution!
Enamel damage: Do not start any operations when there is water on the cooking compartment floor. Before operation, wipe away the water from the cooking compartment floor.

Drying the cooking compartment by hand

1. Allow the appliance to cool down.
2. Remove any food remnants from the walls of the cooking compartment.
3. Dry the cooking compartment with a sponge.
4. Leave the appliance door open for 1 hour so that the cooking compartment dries completely.

Sabbath mode

With the Sabbath mode, a cooking time of up to 74 hours can be set. You can keep the food in the cooking compartment warm without having to switch the oven on or off.

Starting Sabbath mode

Prerequisite: "Sabbath mode activated" is activated in the basic settings. ⟶ *"Basic settings" on page 18*

The cooking compartment heats up with top/bottom heating and a temperature between 85 °C and 140 °C.

1. Press the On/Off button.
   A type of heating and a temperature are suggested in the display.
2. Turn the rotary selector anti-clockwise and select the "Sabbath mode" type of heating.
3. Touch the suggested temperature and set the temperature using the rotary selector.
4. Press the ◷ button to open the time-setting options menu and touch the "Cooking time" field.
   25:00 hours are suggested.
5. Use the rotary selector to set the required cooking time.
6. Press the Start/Stop button to start.
   You can see the cooking time counting down in the status bar.

The cooking time has elapsed

A signal sounds. The oven stops heating. “Finished” appears in the status bar.

Setting a later end time

It is not possible to set a later end time.

Cancelling Sabbath mode

Press the On/Off button. All settings are deleted. You can apply new settings.

Cleaning function

The self-cleaning surfaces in the cooking compartment are cleaned when the operating mode is set to "Cleaning function".

The self-cleaning surfaces (back panel, ceiling panel and side panels) are coated with a porous, matt ceramic material. This coating absorbs and breaks down splashes from baking, roasting and grilling while the oven is in operation. If the surfaces no longer clean themselves adequately and dark patches appear, the surfaces can be cleaned by the cleaning function.

Note: The appliance records the number of times it is used. The appliance indicates when it has reached a point in time after which cleaning is recommended. The recommendation is displayed until the cleaning function has finished.

If you do not act on this recommendation, the self-cleaning surfaces may become damaged.
If your appliance is already prematurely very dirty or if you notice dark patches on the back panel, do not wait until your appliance recommends cleaning to do so. This is because the more often the appliance is cleaned, the longer the self-cleaning surfaces will retain their cleaning capability. You can clean your appliance at any time as required using the cleaning function.

Before running the cleaning function

Remove shelves, rails, accessories and ovenware from the cooking compartment.

Cleaning the cooking compartment floor and the inside of the appliance door

Remove the worst dirt from the cooking compartment floor, the inside of the appliance door and the interior lighting. Otherwise, patches will appear that can no longer be removed.

Caution!

Do not use oven cleaner on the self-cleaning surfaces. This will damage the surfaces. If oven cleaner does get onto these surfaces, dab it off immediately using water and a sponge cloth. Do not rub the surface and do not use abrasive cleaning aids.

⚠ Warning – Risk of burns!
⚠ The appliance becomes very hot on the outside during the cleaning function. Never touch the appliance door. Allow the appliance to cool down. Keep children at a safe distance.

Setting the cleaning function

Cleaning lasts 60 minutes.
The duration cannot be changed.

1. Press the menu button.
   The operating modes menu opens.
2. Select the "Cleaning function" operating mode.
   If you touch the "Next" field, information on the cleaning operation is displayed.
3. Press the "Start/stop" button to start the cleaning operation.
   You can see the duration counting down in the status bar.

Keep the kitchen ventilated while cleaning is in progress.

Once the cleaning has finished

An audible signal sounds. The oven stops heating. “Finished” appears in the status bar. Use the ◷ button to switch off the audible signal.

Cancelling cleaning

Press the On/Off button. All settings are deleted. You can implement new settings.

Caution!

The cleaning recommendation is not reset. The recommendation to run the cleaning function appears on the display.

You can set the cleaning to run overnight

In the section "Time settings", you can find out how to delay the end time. This allows you to use the oven at any time throughout the day. ⟶ *"Time-setting options" on page 16*

Once the cleaning function has finished

Once the cooking compartment has cooled down, wipe down the cooking compartment with a damp cloth if necessary.

Note: During operation and while the cleaning function is active, reddish patches may form on the surfaces. This is not rust, but residue from food. These spots are not harmful and do not impair the cleaning ability of the self-cleaning surfaces.

Home Connect

This appliance is Wi-Fi-capable and can be remotely controlled using a mobile device.

If the appliance is not connected to the home network, the appliance functions in the same way as an oven with no network connection and can still be operated via the display.

The availability of the Home Connect function depends on the availability of Home Connect services in your country. Home Connect services are not available in every country. You can find more information on this at www.home-connect.com.

Notes

- Ensure that you follow the safety instructions in this instruction manual and that you comply with these even when you are away from home and are operating the appliance via the Home Connect app. You must also follow the instructions in the Home Connect app.⟶ *"Important safety information" on page 5*
- Operating the appliance directly from the appliance always has priority. During this time, it is not possible to operate the appliance using the Home Connect app.

Setting up

To set up Home Connect for your appliance, you require the following:

- Your appliance, which must be connected to the mains and switched on,
- A smartphone or tablet with the latest version of the iOS or Android operating system,
- The Home Connect app,
- The supplied Home Connect installation instructions,
- And your appliance within range of the Wi-Fi signal for your home network

The app guides you through the entire process. Follow the instructions in the app.

Remote Start

In order to start and operate your appliance via the Home Connect app, you must activate remote start. If remote start has been deactivated, you can only display the operating statuses in the Home Connect app and implement appliance settings.

Note: Some of the operating modes can only be started on the oven.

Remote start is automatically deactivated:
- if you open the oven door 15 minutes after remote start has been activated.
- if you open the oven door 15 minutes after the end of operation.

When you start the oven using the controls on the appliance itself, remote start is automatically activated. You can now make changes or start a new programme from your mobile device.

Activating remote start

1. Press the menu button.
2. Touch "Remote start".

appears in the display.

Home Connect settings

You can adjust Home Connect to suit your requirements at any time.

Note: You will find the Home Connect settings in your appliance's basic settings. Which settings the display shows will depend on whether Home Connect has been set up and whether the appliance is connected to your home network.

Basic setting	Possible settings	Explanation
WiFi	Switching on/off	You can switch the wireless module on and off. If WiFi is activated, you can use the Home Connect function. The appliance requires max. 2 W in networked standby.
Network	Connecting to the network/ disconnecting from the network	Switch the network connection on or off as required (e.g. for holiday). The network information will be retained after the appliance is switched off. After switching on the appliance, wait for a few seconds while it reconnects to the network.
Connect to app		Start the connection process between the app and the appliance.
Remote control	on/off	Use the Home Connect app to access the appliance's functions. When it is deactivated, only the operating statuses are displayed in the app.
Appliance information		The display shows the network and appliance information.

Remote diagnostics

If a fault occurs, the after-sales service can use remote diagnostics to access your appliance.

Contact the after-sales service, making sure that your appliance is connected to the Home Connect server and checking that the remote diagnostics service is available in your country.

Note: For more information and to check whether the remote diagnostics service is available in your country, please visit the Help & Support area of the Home Connect website for your country: www.home-connect.com

About data protection

When your appliance is connected for the first time to a WLAN network, which is connected to the Internet, your appliance transmits the following categories of data to the Home Connect server (initial registration):

- Unique appliance identification (consisting of appliance codes as well as the MAC address of the installed WiFi communication module).
- Security certificate of the WiFi communication module (to ensure a secure IT connection).
- The current software and hardware version of your domestic appliance.
- Status of any previous resetting to factory settings.

This initial registration prepares the Home Connect functions for use and is only required when you want to use these Home Connect functions for the first time.

Note: Ensure that the Home Connect functions can be used only in conjunction with the Home Connect app. Information on data protection can be accessed in the Home Connect app.

Declaration of Conformity

BSH Hausgeräte GmbH hereby declares that the appliance which features Home Connect is in accordance with the basic requirements and the other relevant provisions of the directive 2014/53/EU.

A detailed RED Declaration of Conformity can be found online at www.siemens-home.bsh-group.com on the product page of your appliance with the additional documents.

CE

2.4 GHz band: max. 100 mW
5 GHz band: max. 100 mW

	BE	BG	CZ	DK	DE	EE	IE	EL
	ES	FR	HR	IT	CY	LV	LT	LU
	HU	MT	NL	AT	PL	PT	RO	SI
	SK	FI	SE	UK	NO	CH	TR	

5 GHz Wi-Fi: for indoor use only

Cleaning agent

With good care and cleaning, your appliance will retain its appearance and remain fully functioning for a long time to come. We will explain here how you should correctly care for and clean your appliance.

Suitable cleaning agents

To ensure that the different surfaces are not damaged by using the wrong cleaning agent, observe the information in the table. Depending on the appliance model, not all of the areas listed may be on/in your appliance.

Caution!
Risk of surface damage
Do not use:
- Harsh or abrasive cleaning agents,
- Cleaning agents with a high alcohol content,
- Hard scouring pads or cleaning sponges,
- High-pressure cleaners or steam cleaners,
- Special cleaners for cleaning the appliance while it is hot.

Wash new sponge cloths thoroughly before use.

Tip: Highly recommended cleaning and care products can be purchased through the after-sales service. Observe the respective manufacturer's instructions.

⚠ Warning – Risk of burns!
The appliance becomes very hot. Never touch the interior surfaces of the cooking compartment or the heating elements. Always allow the appliance to cool down. Keep children at a safe distance.

Area	Cleaning
Appliance exterior	
Stainless steel front	Hot soapy water: Clean with a dish cloth and then dry with a soft cloth. Remove flecks of limescale, grease, starch and albumin (e.g. egg white) immediately. Corrosion can form under such flecks. Special stainless steel cleaning products suitable for hot surfaces are available from our after-sales service or from specialist retailers. Apply a very thin layer of the cleaning product with a soft cloth.
Plastic	Hot soapy water: Clean with a dish cloth and then dry with a soft cloth. Do not use glass cleaner or a glass scraper.
Painted surfaces	Hot soapy water: Clean with a dish cloth and then dry with a soft cloth.
Control panel	Hot soapy water: Clean with a dish cloth and then dry with a soft cloth. Do not use glass cleaner or a glass scraper.

Door panels	Hot soapy water: Clean with a dish cloth and then dry with a soft cloth. Do not use a glass scraper or a stainless steel scouring pad.
Door handle	Hot soapy water: Clean with a dish cloth and then dry with a soft cloth. If descaler comes into contact with the door handle, wipe it off immediately. Otherwise, any stains will not be able to be removed.
Appliance interior	
Enamel surfaces and self-cleaning surfaces	Observe the instructions for the surfaces of the cooking compartment that follow the table.
Glass cover for the interior lighting	Hot soapy water: Clean with a dish cloth and then dry with a soft cloth. If the cooking compartment is heavily soiled, use oven cleaner.
Door seal Do not remove.	Hot soapy water: Clean with a dish cloth. Do not scour.
Door cover	made from stainless steel: Use stainless steel cleaner. Follow the manufacturers' instructions. Do not use stainless steel care products. made from plastic: Clean using hot soapy water and a dish cloth. Dry with a soft cloth. Do not use glass cleaner or a glass scraper. Remove the door cover for cleaning.
Stainless steel interior door frame	Stainless steel cleaner: Observe the manufacturer's instructions. This can be used to remove discolouration. Do not use stainless steel care products.
Rails	Hot soapy water: Soak and clean with a dish cloth or brush.
Pull-out system	Hot soapy water: Clean with a dish cloth or a brush. Do not remove the lubricant while the pull-out rails are pulled out – it is best to clean them when they are pushed in. Do not clean in the dishwasher.
Accessories	Hot soapy water: Soak and clean with a dish cloth or brush. If there are heavy deposits of dirt, use a stainless steel scouring pad.

Notes

- Slight differences in colour on the front of the appliance are caused by the use of different materials, such as glass, plastic and metal.
- Shadows on the door panels, which look like streaks, are caused by reflections made by the interior lighting.
- Enamel is baked on at very high temperatures.This can cause some slight colour variation. This is normal and does not affect operation.
  The edges of thin trays cannot be completely enamelled. As a result, these edges can be rough. This does not impair the anti-corrosion protection.

Surfaces in the cooking compartment

The back wall, ceiling and side parts in the cooking compartment are self-cleaning. You can tell this from the rough surface.

The cooking compartment floor is enamelled and has smooth surfaces.

Cleaning enamel surfaces

Clean the smooth enamel surfaces with a dish cloth and hot soapy water or a vinegar solution. Then dry them with a soft cloth.

Soften baked-on food remnants with a damp cloth and soapy water. Use stainless steel wire wool or oven cleaner to remove stubborn dirt.

Caution!

Never use oven cleaner in the cooking compartment when it is still warm. This may damage the enamel. Remove all food remnants from the cooking compartment and the appliance door before you next heat up the appliance.

Leave the cooking compartment open to dry after cleaning it.

Note: Food residues can cause white deposits to form. These are harmless and do not affect how the appliance works. You can remove these residues using lemon juice if required.

Cleaning self-cleaning surfaces

The self-cleaning surfaces are coated with a porous, matte ceramic layer. This coating absorbs and dispels splashes from baking and roasting while the appliance is in operation.

If the self-cleaning surfaces no longer clean themselves sufficiently and dark stains appear, they can be cleaned using the cleaning function. To do this, refer to the information in the relevant section. ⟶ *"Cleaning function" on page 21*

Caution!

Do not use oven cleaner on self-cleaning surfaces. This will damage the surfaces. If oven cleaner does get onto these surfaces, dab it off immediately using water and a sponge cloth. Do not rub the surface and do not use abrasive cleaning aids.

Keeping the appliance clean

Always keep the appliance clean and remove dirt immediately so that stubborn deposits of dirt do not build up.

⚠ Warning – Risk of fire!
Loose food remnants, fat and meat juices may catch fire. Before using the appliance, remove the worst of the

food remnants from the cooking compartment, heating elements and accessories.

Tips

- Clean the cooking compartment after each use. This will ensure that dirt cannot be baked on.
- Always remove flecks of limescale, grease, starch and albumin (e.g. egg white) immediately.
- Use the universal pan for baking very moist cakes.
- Use suitable ovenware for roasting, e.g. a roasting dish.

Rails

With good care and cleaning, your appliance will retain its appearance and remain fully functional for a long time to come. This will tell you how to remove the shelves and clean them.

Detaching and refitting the rails

⚠ Warning – Risk of burns!
The rails become very hot. Never touch the hot rails. Always allow the appliance to cool down. Keep children away from the appliance.

Detaching the rails

1. Push the rail to the front and up (fig. 1)
2. and detach it (fig. 2).

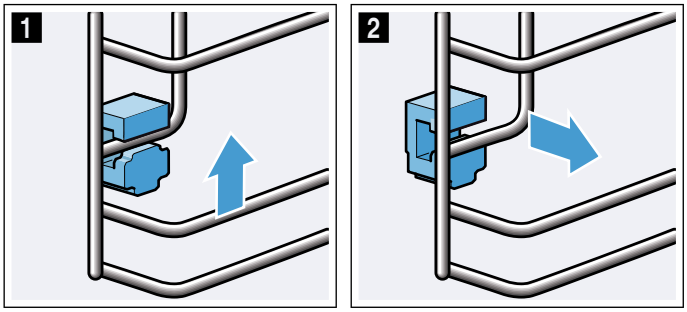

3. Then swing the entire rail outwards **a** and detach it at the rear **b** (fig. 3).

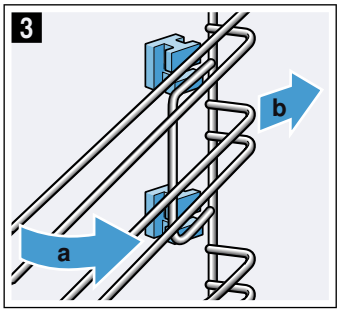

Clean the rails with cleaning agent and a sponge. For stubborn deposits of dirt, use a brush.

Inserting the holders

If the holders fall out when you remove the rails, these must be re-inserted.

1. The holders at the front differ from those at the rear (fig. 1).
2. Use the hook to mount the front holder at the top into the round hole **a**, set it at a slight incline, attach it at the bottom, and straighten it **b** (fig. 2).

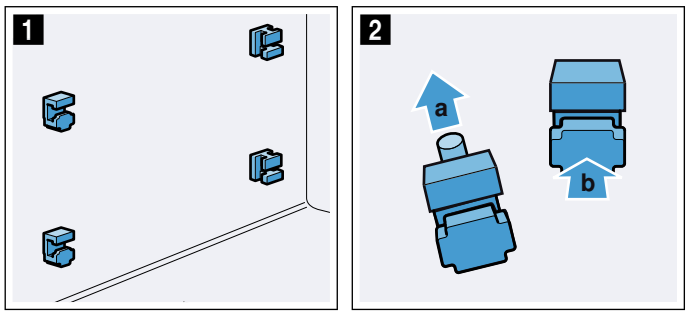

3. Use the hook to attach the rear holder into the upper hole **a** and push it into the lower hole **b** (fig. 3).

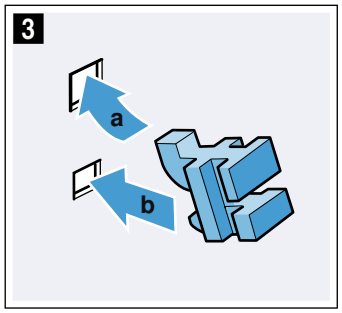

Attaching the rails

When hanging the rails, ensure that the sloping edge is at the top of the rail.

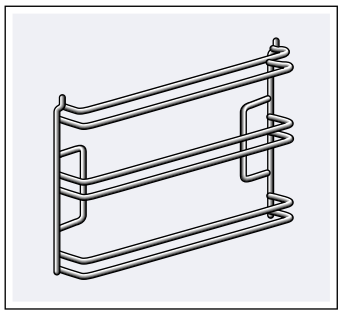

The rails fit both the left and right sides.

1. Hold the rear of the frame at an angle, and mount it at the top and bottom **a** (fig. 1).
2. Pull the rail forwards (fig. 2).

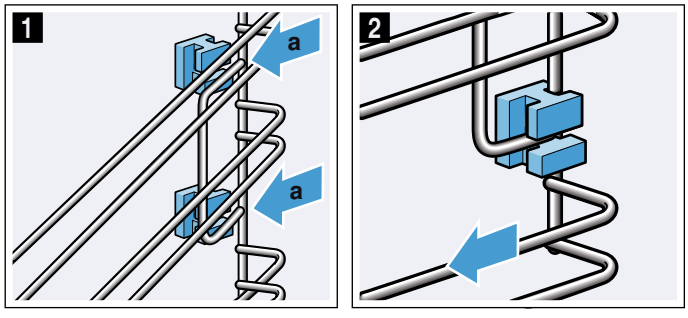

3. Then fold it forwards and insert it (fig. 3)
4. and push it downwards (fig. 4).

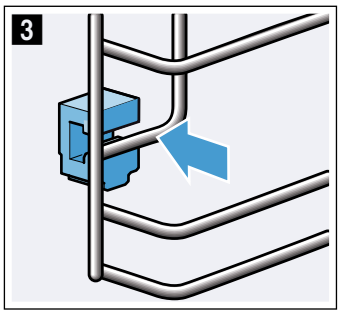

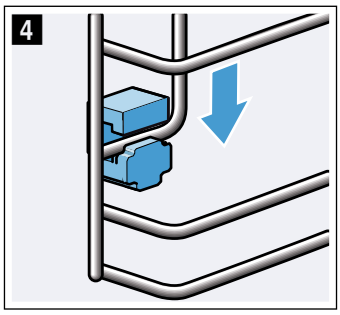

Appliance door

With good care and cleaning, your appliance will retain its appearance and remain fully functional for a long time to come. This will tell you how to clean the appliance door.

Removing the door cover

The stainless-steel inlay in the door cover may become discoloured. To carry out thorough cleaning, you can remove the cover.

1. Open the appliance door slightly.
2. Press on the right and left side of the cover (fig. 1).
3. Remove the cover (fig. 2).
   Close the appliance door carefully

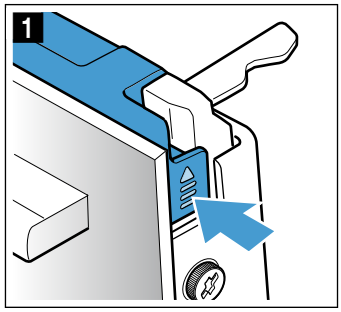

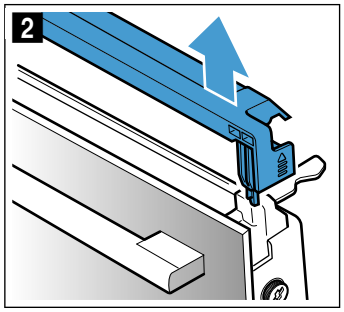

Note: Clean the stainless-steel inlay in the cover with a stainless-steel cleaning agent. Clean the rest of the door cover with soapy water and a soft cloth.

4. Open the appliance door again slightly. Put the cover back in place and press on it until it clicks audibly into place (fig. 3).

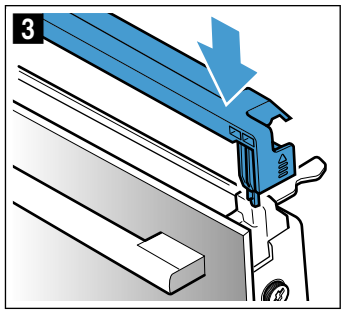

5. Close the appliance door.

Removing and fitting the door panels

To facilitate cleaning, you can remove the glass panels from the appliance door.

Removing the door panels from the appliance

1. Open the appliance door slightly.
2. Press on the right and left side of the cover (fig. 1).
3. Remove the cover (fig. 2).

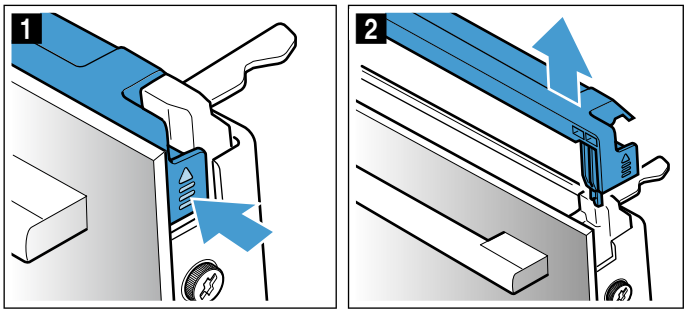

4. Undo and remove the screws on the left and right of the appliance door (fig. 3).
5. Before closing the door again, trap a tea towel that has been folded several times in the door (fig. 4). Pull out the front panel upwards and lay it on a flat surface with the door handle facing downwards.

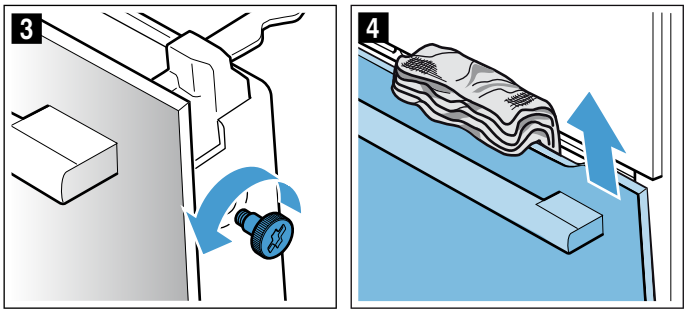

Clean the panels with glass cleaner and a soft cloth.

⚠ Warning – Risk of serious damage to health!
If the screws are loosened, the safety of the appliance can no longer be guaranteed. Microwave energy may escape. Never loosen the screws.

Do not unscrew the four black screws on the frame (fig. 5).

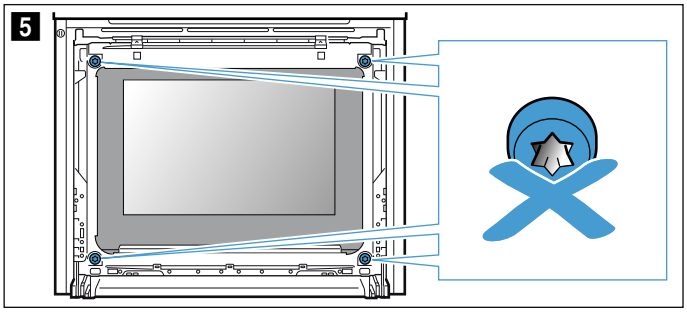

⚠ Warning
Risk of injury!
- Scratched glass in the appliance door may develop into a crack. Do not use a glass scraper, sharp or abrasive cleaning aids or detergents.
- The hinges on the appliance door move when opening and closing the door, and you may be trapped. Keep your hands away from the hinges.

Fitting the door panels on the appliance

1. Insert the front panel downwards into the retainers (fig. 1).
2. Close the front panel until both upper hooks are opposite the opening (fig. 2).

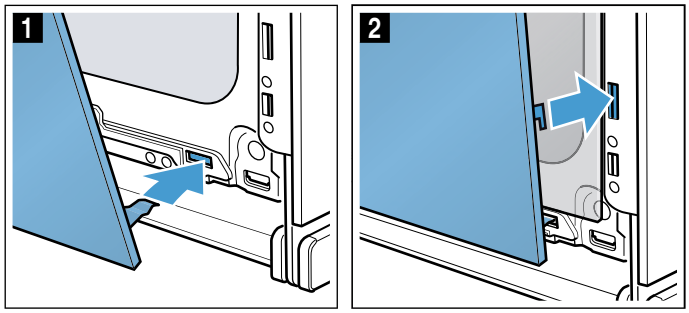

3. Press the front panel down until it clicks audibly into place (fig. 3)
4. Open the appliance door again slightly and remove the tea towel.
5. Screw both screws back in on the left and right.
6. Put the cover back in place and press on it until it clicks audibly into place (fig. 4).

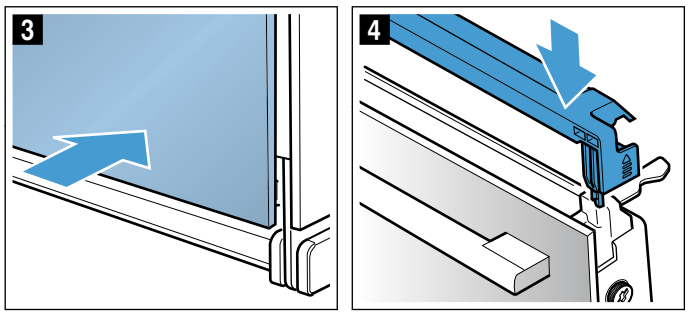

7. Close the appliance door.

Caution!
Do not use the cooking compartment again until the panels have been correctly fitted.

Trouble shooting

If a fault occurs, there is often a simple explanation. Before calling the after-sales service, please refer to the fault table and attempt to correct the fault yourself.

Note: If a dish does not turn out as well as you had hoped, refer to the table section at the end of the instruction manual, where you will find plenty of tips and information. ⟶ *"Tested for you in our cooking studio" on page 31*

⚠ Warning – Risk of electric shock!
Incorrect repairs are dangerous. Repairs may only be carried out and damaged power cables replaced by one of our trained after-sales technicians. If the appliance is defective, unplug the appliance from the mains or switch off the circuit breaker in the fuse box. Contact the after-sales service.

⚠ Warning – Risk of injury!
Incorrect repairs are dangerous. Do not attempt to repair the appliance yourself. Repairs must only be carried out by one of our trained after-sales engineers. If the appliance is defective, call the after-sales service.

Fault table

If an error message beginning with 'E' is shown, e.g. E0111, switch the appliance off and then on again. If this message appears again, contact the after-sales service.

Fault	Possible cause	Information/remedial action
The appliance does not work	The fuse is faulty	Check in the fuse box to make sure that the fuse for the appliance is in working order
	Power cut	Check whether other kitchen appliances are working
Although the appliance is switched on, it cannot be operated; the ⊸ symbol is shown in the display	The child lock is activated	Press and hold the ⊸ button until the ⊸ symbol goes out
The cooking compartment does not heat and "Demo mode on" is shown in the display	The appliance is in demo mode	Switch off the fuse in the fuse box and switch it back on again after approx. 10 seconds. Switch on the appliance and select "Demo mode off" in the settings.
The appliance will not start and "Cooking compartment too hot" appears on the display	The cooking compartment is too hot for the selected dish or type of heating	Allow the cooking compartment to cool down and start again
The interior lighting has failed	The LED bulb is defective	Call the after-sales service
Home Connect does not work correctly.		Go to www.home-connect.com
The cooking compartment becomes hot during microwave-only operation.	Drying function is switched on.	To prevent condensation forming when the appliance is in microwave-only mode, the appliance will automatically switch on the top heating element when it is set to 600 W or "Max.". The cooking result is not affected by this. You can switch this function off in the basic settings. Observe the information on the microwave. ⟶ *"Microwave" on page 19*

Maximum operating time exceeded

Your appliance automatically ends the operation if no duration has been set and the setting has not been changed for a long time.

The point at which this occurs depends on the temperature or grill setting that has been set.

A message appears on the display on the appliance to say that the operation is being ended automatically. The operation is then cancelled.

To use the appliance again, first switch it off. To switch the appliance back on again set the required operation.

Tip: Set a cooking time so that the appliance does not switch off when you do not want it to, e.g. with an extremely long preparation time. The appliance heats up until the set cooking time has elapsed.

Cooking compartment bulbs

To light the interior of your cooking compartment, your appliance has one or more long-life LED bulbs.

However, if ever an LED bulb or the bulb's glass cover is defective, call the after-sales service. The lamp cover must not be removed.

Customer service

Our after-sales service is there for you if your appliance needs to be repaired. We will always find an appropriate solution, also in order to avoid after-sales personnel having to make unnecessary visits.

E number and FD number

When calling us, please quote the full product number (E no.) and the production number (FD no.) so that we can provide you with the correct advice. The rating plate bearing these numbers can be found when you open the appliance door.
On some appliances with a steam-assisted cooking function, you will find the rating plate behind the control panel.

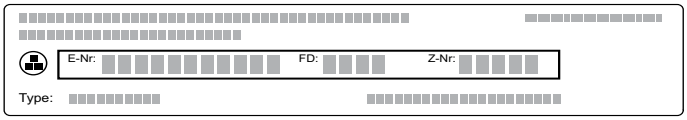

To save time, you can make a note of the numbers for your appliance and the telephone number of the after-sales service in the space below in case you need them.

E no.	FD no.

After-sales service ☏

Please note that a visit from an after-sales service engineer is not free of charge in the event that the appliance has been misused, even during the warranty period.

Please find the contact data of all countries in the enclosed customer service list.

To book an engineer visit and product advice

GB 0344 892 8999
Calls charged at local or mobile rate.

IE 01450 2655
0.03 € per minute at peak. Off peak 0.0088 € per minute.

Rely on the professionalism of the manufacturer. You can therefore be sure that the repair is carried out by trained service technicians who carry original spare parts for your appliances.

Dishes

You can use the "Dishes" operating mode to prepare a wide variety of food. The appliance chooses the optimal setting for you.

To achieve good results, the cooking compartment must not be too hot for the type of food you have selected. If it is, a message will appear on the display. Allow the cooking compartment to cool down and start again.

Information on the settings

- The cooking result depends on the quality of the food and the size and type of cookware. For an optimal cooking result, use food that is in good condition and chilled meat only. For frozen food, use food straight out of the freezer only.
- For some food, a temperature, heating mode and cooking time is suggested. The temperature and the cooking time can be changed according to your requirements.
- For other dishes, you will be asked to enter the weight. Always enter the total weight unless the appliance asks for something different. The appliance will then apply the time and temperature settings for you.
  It is not possible to set weights outside of the intended weight range.
- When roasting dishes for which the appliance will apply the temperature selection for you, temperatures of up to 300 °C can be saved. Therefore, make sure that you use cookware that is sufficiently heat resistant.
- Information is provided, e.g. on cookware, shelf position or the addition of liquid when cooking meat. Some food requires turning or stirring, etc., during cooking. This is shown in the display shortly after operation starts. An audible signal will remind you at the right time.
- Information on the right kind of cookware to use and tips and tricks for the preparation can be found at the end of the instruction manual. ⟶ *"Tested for you in our cooking studio" on page 31*

Microwave

For some food, the microwave is automatically activated. Using the microwave significantly reduces cooking time – cooking time is virtually cut in half. The appliance instructs you to use cookware that is suitable for the microwave. The "Microwave" section provides information on the type of cookware that is suitable.
⟶ *"Microwave" on page 19*

Selecting a dish

The dishes are arranged in a uniform structure:

- Category
- Food
- Dish

The following table lists the categories with the corresponding food. One or more dishes are listed beside each food.

Categories	Food
Cake	Cakes in tins
	Cakes on baking trays
	Small baked items
	Biscuits
Bread, bread rolls	Bread
	Bread rolls
Pizza, savoury cakes	Pizza
	Savoury cakes, quiches
Bakes, soufflés	Lasagne, fresh
	Soufflé in individual moulds
	Fruit crumble
	Yorkshire pudding
Frozen products	Pizza
	Bread rolls
	Bakes
	Potato products
	Poultry, fish
Poultry	Chicken
	Duck, goose
	Turkey
Meat	Pork
	Beef
	Lamb
	Meat dishes
Fish	Fish
	Fish fillets
Side dishes, vegetables	Vegetables
	Potatoes
	Rice
	Cereals
Defrosting food	Bread, bread rolls
	Cake
	Meat, poultry
	Fish

Applying settings for dishes

You will be guided through the entire setting process for your chosen food. Always touch the "Next" field.

1. Press the menu button.
   The operating modes menu will open.
2. Select "Dishes" mode.
   The first category will appear on the display.
3. Use the rotary selector to select the category you require.
4. Touch the "Next" field.
5. Use the rotary selector to select the food.
6. Touch the "Next" field.
7. Use the rotary selector to select the dish.
8. Touch the "Next" field.
9. Turn the rotary selector to set the weight.
   Note: Touch the "Tip" field for information on the best shelf position, cookware, etc. to use.
10. Press the Start/Stop button to start.

The setting has ended

A signal sounds. “Finished” appears in the status bar. The oven stops heating. You can cancel the audible signal early using the ◷ button.

If you are not satisfied with the cooking result, you can increase the cooking time again. Touch the "Extend cooking time" field. A cooking time is suggested. However, you can change this if you want.

If you are satisfied with the cooking result, touch "Finish". "Enjoy your meal" appears in the display.

Cancelling the setting

Press the On/Off button. All settings are deleted. You can implement new settings.

Setting a later end time

For some dishes, it is possible to set a later end time. You can find out how to set a later end time by looking in the time-setting options. ⟶ *"Time-setting options" on page 16*

Once you have set an end time, the display shows the waiting time. The status bar shows the time at which operation is to end. None of the settings can be changed. Please remember that easily spoiled foods must not be allowed to remain in the cooking compartment for too long.

Tested for you in our cooking studio

Here, you can find a selection of dishes and the ideal settings for them. We will show you which type of heating and temperature are best suited to your dish. You will get information on suitable cooking accessories and the height at which they should be placed in the oven. You will also get tips about cookware and preparation methods.

Note: A lot of steam can build up in the cooking compartment when cooking food.
Your appliance is very energy-efficient and radiates very little heat to its surroundings during operation. Due to the high difference in temperature between the appliance interior and the external parts of the appliance, condensation may build up on the door, control panel or adjacent kitchen cabinet panels. This is a normal physical phenomenon. Condensation can be reduced by preheating the oven or opening the door carefully.

Silicone moulds

For the best cooking results, we recommend dark-coloured metal baking tins/dishes.

Nevertheless, if you wish to use silicone moulds, follow the manufacturer's instructions and recipes. Silicone moulds are often smaller than normal baking tins. Quantity and recipe specifications may vary.

Baking

Here, you can find recommended settings for many dishes.

Also refer to the notes in the section on allowing dough to rise.

Only use original accessories supplied with your appliance. These have been tailored to the cooking compartment and the operating modes of your appliance.

Baking in combination with a microwave

If you bake in combination with a microwave, you can reduce the cooking time considerably.

Always use heat-resistant cookware that is suitable for use in microwaves. Observe the notes on cookware suitable for microwaves. ⟶ *"Microwave" on page 19*

In combined operation, you can use conventional baking tins made from metal. If sparks form between the baking tin and the wire rack, check whether the baking tin is clean on the outside. Change the position of the baking tin on the wire rack. If this does not help, continue baking without the microwave. The baking time will be extended.

If you use baking tins/dishes made from plastic, ceramic or glass, the baking time indicated in the settings tables will be reduced. The cake will not brown as much underneath.

Baking in combination with a microwave is only possible on one level.

Shelf positions

Use the indicated shelf positions.

Baking on one level
When baking on one level, use the following shelf position:
- Level 1

You can also prepare soufflés in a water bath in the universal pan. To do so, slide the universal pan in at level 1.

Baking on two levels
Use 4D hot air. Baked items that are placed into the oven on trays or in baking tins/dishes at the same time will not necessarily be ready at the same time.
- Universal pan: Level 3
  Baking tray: Level 1
- Baking tins/dishes on the wire rack
  First wire rack: Level 3
  Second wire rack: Level 1

By preparing several dishes at the same time, you can make energy savings of up to 45 per cent. Position baking tins/dishes next to one another or offset and vertically stacked in the cooking compartment.

Accessories

Ensure that you always use suitable accessories and that they are placed in the oven the right way around.

Wire rack
Slide the wire rack in with the embossed "microwave" facing the appliance door, and the curved lip pointing downwards. Always place ovenware, tins and dishes on the wire rack.

Universal pan or baking tray
Slide the universal pan or the baking tray in carefully as far as the limit stop with the bevelled edge facing the appliance door.

When baking moist cakes or pastries with many toppings, use the universal pan so that any excess liquid does not overflow and make the cooking compartment dirty.

Baking tins
Dark- coloured metal baking tins are most suitable.

Tinplate baking tins, ceramic dishes and glass dishes extend baking time and mean that the baked item will not brown evenly.

Greaseproof paper
Only use greaseproof paper that is suitable for the selected temperature. Always cut greaseproof paper to size.

Recommended setting values

The table lists the optimal heating type for various baked items. The temperature and baking time depend on the amount and consistency of the dough/mixture. For this reason, the table specifies setting ranges. Try using the lower values to start with. A lower temperature will result in more even browning. You can use a higher setting next time if necessary.

Note: Baking times cannot be reduced by using higher temperatures. Cakes or small baked items would only be cooked on the outside, and would not be fully baked in the middle.

The setting values apply to food that is placed into a cold cooking compartment; by doing this, you can make energy savings of up to 20 per cent.If you preheat the oven, you can reduce the indicated baking times by several minutes.

Preheating is necessary for selected food, and this is indicated in the table. Do not place your food or accessories into the cooking compartment until it has finished preheating.

If you wish to follow one of your own recipes when baking, you should use the setting values listed for similar baked items in the table as reference.Additional information can be found in the baking tips listed after the settings table.

Remove unused accessories from the cooking compartment. This will ensure that you achieve the best possible cooking results and energy savings of up to 20 per cent.

Types of heating used:
- 4D hot air
- Top/bottom heating
- Pizza setting

Dish	Accessories/cookware	Shelf position	Type of heating	Temperature in °C	MW power in watts	Cooking time in mins.
One level baking						
Victoria sponge cake	2x Ø20 cm tins	1		160-170*	-	20-30
Light fruit cake	high Ø20cm tin	1		140-160	-	70-90
Light fruit cake	high Ø20 cm tin	1		140-150	90	50-60
Rich Fruit Cake	high Ø23cm tin	1		130-150	-	150-180
Rich Fruit Cake	high Ø23cm tin	1		130-140	90	80-90
Fruit crumble	flat glass dish	2		150-170*	-	30-45
Sponge Cake (fatless), 3 eggs	springform cake tin, Ø26 cm	1		160-170*	-	30-45
Sponge flan, 6 eggs	springform cake tin, Ø28 cm	1		150-170*	-	30-50
Swiss Roll	swiss roll tin	2		180-190*	-	10-18
Fruit Pie	plate Ø20cm or pie tin	1		180-190	-	45-50
Quiche	quiche tin (dark coated)	1		190-210	-	30-45
(White) Bread	loaf tin (1x 900 g or 2x 450 g)	1		190-210*	-	20-30
Scones	baking tray	1		180-200*	-	10-14
Biscuits	baking tray	2		140-160*	-	10-25
Small cakes	12-cup-tin	1		140-160*	-	20-35
Puff pastry slices	baking tray	2		170-190*	-	20-45
Jam tarts	12-cup-tin	2		160-180*	-	15-30
Meringue	baking tray	2		80-90*	-	120-150
Pavlova	baking tray	2		90-100*	-	120-180
Soufflé	1,2 L-soufflé dish	1		160-170*	-	40-50
Soufflé	individual moulds	1		170-190	-	65-75
Choux pastry	baking tray	1		190-210*	-	30-40
Meat Pie	rectangular pie tin	1		180-190	-	40-50
Yorkshire Pudding	12-cup-tin	1		200-220*	-	15-25
Jacket potatoes	baking tray	2		150-170	-	75-90
Pizza, homemade	baking tray	1		200-220	-	20-30
Pizza, homemade	baking tray	1		220-230	-	25-30
Pizza, homemade, thin base	pizza tray	1		210-230	-	20-30
Multishelf baking						
Scones, 2 levels	2 baking trays	3+1		180-200*	-	12-16
* Preheat						

Dish	Accessories/cookware	Shelf position	Type of heating	Temperature in °C	MW power in watts	Cooking time in mins.
Biscuits, 2 levels	2 baking trays	3+1		140-160*	-	15-30
Small cakes, 2 levels	2x 12-cup-tins	3+1		140-160*	-	22-32
Puff pastry slices, 2 levels	2 baking trays	3+1		170-190*	-	20-45
Jam tarts, 2 levels	2x 12-cup-tins	3+1		160-180*	-	20-35
Meringues, 2 levels	2 baking trays	3+1		80-90*	-	120-150
Jacket potatoes, 2 levels	universal pan + baking tray	3+1		150-170*	-	75-90
Pizza, homemade, 2 levels	universal pan + baking tray	3+1		180-200	-	35-45
* Preheat						

Tips on baking

You want to find out whether the cake is completely cooked in the middle.	Push a cocktail stick into the highest point on the cake. If the cocktail stick comes out clean with no dough residue, the cake is ready.
The cake collapses.	Next time, use less liquid. Alternatively, set the temperature to be 10 °C lower and extend the baking time. Adhere to the specified ingredients and preparation instructions in the recipe.
The cake has risen in the middle but is lower around the edge.	Only grease the base of the springform cake tin. After baking, loosen the cake carefully with a knife.
The fruit juice overflows.	Next time, use the universal pan.
Small baked items stick to one another during baking.	There should be a gap of approx. 2 cm around each item. This gives enough space for the baked items to expand well and brown on all sides.
The cake is too dry.	Set the temperature 10 °C higher and shorten the baking time.
The cake is generally too light in colour.	If the shelf position and the cookware are correct, then you should increase the temperature if necessary or extend the baking time.
The cake is too light on top, and too dark underneath.	Bake the cake one level higher in the oven the next time.
The cake is too dark on top, and too light underneath.	Bake the cake one level lower in the oven the next time. Select a lower temperature and extend the baking time.
Cakes baked in a tray or tin are too brown at the back.	Place the baking tray in the middle of the accessories, not directly against the back wall.
The whole cake is too dark.	Select a lower temperature next time and extend the baking time if necessary.
The cake is unevenly browned.	Select a slightly lower temperature. Protruding greaseproof paper can affect the air circulation. Always cut greaseproof paper to size. Ensure that the baking tin does not stand directly in front of the openings in the cooking compartment back wall. When baking small items, you should use similar sizes and thicknesses wherever possible.
You were baking on several levels. The items on the top baking tray are darker than those on the lower baking tray.	Always select 4D hot air when baking on several levels. Baked items that are placed into the oven on trays or in baking tins/dishes at the same time will not necessarily be ready at the same time.
The cake looks good, but is not cooked properly in the middle.	Use a lower temperature and bake slightly longer; if necessary, add slightly less liquid. For cakes with a moist topping, bake the base first. Sprinkle it with almonds or breadcrumbs and then place the topping on top.
The cake cannot be turned out of the dish when it is turned upside down.	Allow the cake to cool down for 5 to 10 minutes after baking. If it still sticks, carefully loosen the cake around the edges again using a knife. Turn the cake tin upside down again and cover it several times with a cold, wet cloth. Next time, grease the baking tin/dish and sprinkle with breadcrumbs.

Roasting and braising

Here, you can find information on roasting and braising poultry and meat. You can find the ideal settings for many dishes in the settings tables.

Poultry
For duck or goose, pierce the skin on the underside of the wings. This allows the fat to run out.

If using duck breast, score the skin. Do not turn duck breasts.

When you turn poultry, ensure that the breast side or the skin side is underneath at first.

Poultry will turn out particularly crispy and brown if you baste it towards the end of the roasting time with butter, salted water or orange juice.

Meat
Baste lean meat with fat as required or cover it with strips of bacon.

Score the rind crosswise. If you turn the joint when cooking, ensure that the rind is underneath at first.

When the joint is ready, turn off the oven and allow it to rest for another 10 minutes in the cooking compartment. This allows the meat juices to be better distributed. Wrap the joint in aluminium foil if necessary. The recommended resting time is not included in the cooking time indicated.

Roasting on the wire rack

On the wire rack, poultry and meat will become very crispy on all sides. Roasting on the wire rack is well suited for larger poultry or for multiple pieces at the same time.

Depending on the size and type of the meat, add up to ½ litres of water to the universal pan. Any dripping fat and meat juices will be caught. You can prepare a sauce using these meat juices. In addition, less smoke is generated, and the cooking compartment stays cleaner.

Slide the wire rack in at the indicated shelf position with the imprint "Microwave" facing the appliance door and the outer rail facing downwards. In addition, slide the universal pan in at the shelf position underneath with the slanted edge facing the appliance door.

Roasting and braising in cookware

It is more convenient to roast and braise meat in cookware. You can take the joint out of the cooking compartment more easily in the cookware, and prepare the sauce in the cookware itself.

Only use cookware which is suitable for use in an oven. Check whether the cookware fits in the cooking compartment.

Glass cookware is most suitable. Place hot glass cookware onto a dry mat after cooking. If the surface is damp or cold, the glass may crack.

Add in a little liquid for roasting if the meat is lean. A covering of approx. ½ cm depth should be applied to the base of any glass cookware.

The amount of liquid is dependent on the type of meat, the cookware material and also on whether or not a lid is used. If preparing meat in an enamelled or dark metal roasting dish, it will need a little more liquid than if cooked in glass cookware.

The steam evaporates in the cookware when roasting. Carefully pour in more liquid if required.

Shiny roasting dishes made from stainless steel or aluminium reflect heat like a mirror and are therefore not particularly suitable. The meat cooks more slowly and will not brown so much. Use a higher temperature and/or a longer cooking time.

Observe the manufacturer's instructions for your roasting cookware.

Roasting in uncovered cookware
It is best to use a deep roasting tin/dish for roasting poultry and meat. Place the tin/dish onto the wire rack. If you do not have any suitable cookware, use the universal pan.

Braising in covered cookware
When preparing food with covered cookware, the cooking compartment remains considerably cleaner. Ensure that the lid fits well and closes properly. Place the cookware onto the wire rack.

The distance between the meat and the lid must be at least 3 cm. The meat may rise.

Very hot steam may escape when opening the lid after cooking. Lift the lid at the rear, so that the hot steam can escape away from you.

If necessary, braise the meat first by searing it. Add water, wine, vinegar or a similar liquid to the braising liquid. A covering at least 2 cm deep should be applied to the base of the cookware.

The steam evaporates in the cookware when roasting. Carefully pour in more liquid if required.

Roasting in combination with a microwave

Certain foodstuffs can be prepared in combination with a microwave. The cooking time is considerably reduced by doing so.

As opposed to conventional operation, the cooking time is based on the total weight when roasting in combination with a microwave.

Tip: If you have quantities other than those indicated in the settings tables, the following basic rule applies: double the quantity equates to roughly double the cooking time.

Always use heat-resistant cookware that is suitable for use in microwaves. Roasting dishes made from metal or Römertopf dishes are only suitable for roasting without using the microwave. Observe the notes on cookware suitable for microwaves. ⟶ *"Microwave" on page 19*

Caution!

If you use an oven bag, do not seal it shut with metal clips. Use kitchen string. Do not use metal skewers for roulades. Sparks may form as a result.

Recommended setting values

In the table, you can find the ideal heating type for poultry and meat. Temperature and cooking time depend on the quantity, composition and temperature of the food. Different settings ranges are indicated for

this reason. Try using the lower values at first. You can increase the temperature next time if necessary.

The setting values are based on the assumption that unstuffed, chilled, ready-to-roast poultry and meat are placed into a cold cooking compartment. By doing so, you can make energy savings of up to 20 per cent. If you preheat the oven, the indicated cooking times will be reduced by several minutes.

In the table, you can find specifications for poultry and meat with default values for the weight. If you wish to prepare heavier poultry or meat, use the lower temperature in every case. If roasting several joints, use the weight of the heaviest piece as a basis for determining the cooking time. The individual pieces should be approximately equal in size.

A general rule: the larger the poultry or piece of meat is, the lower the cooking temperature and the longer the cooking time.

Turn the poultry and meat after approx. ½ to ⅔ of the indicated time.

Remove unused accessories from the cooking compartment. This will achieve the best possible cooking results and energy savings of up to 20 per cent.

Cooking time calculation (e. g. 20**+**35):
Please calculate the cooking time with 20 minutes per 500 g meat + 35 minutes additional time. For 1,5 kg the calculated cooking time would be 95 minutes.

Cooking time range (e. g. 10**-**15):
The food is done within the stated minutes.

Types of heating used:
- 4D hot air
- Circulated air grilling

Dish	Accessories/cookware	Shelf position	Type of heating	Temperature in °C	MW power in watts	Time in min.
Beef						
Slow roasting joint	cookware, uncovered	1		140-150	-	35+40
Top side / Top rump	cookware, uncovered	1		160-170	-	30+25
Lamb						
Leg (bone-in)	cookware, uncovered	1		160-170	-	25+25
Shoulder (bone-in)	cookware, uncovered	1		160-170	-	25+20
Shoulder (boned and rolled)	cookware, uncovered	1		170-180	-	25+25
Rack of lamb***	cookware, uncovered	1		180-190*	-	15+25
Pork						
Roasting joint	cookware, uncovered	1		180-190	-	30+35
Loin joint	cookware, uncovered	1		180-190	-	35+35
Belly	cookware, uncovered	1		170-180	-	30+25
Gammon joint	cookware, uncovered	1		160-170	-	30+30
Poultry						
Chicken, whole	cookware, uncovered	1		170-180	-	25+15
Chicken, portion, 200-250 g each**	cookware, uncovered	1		190-200	-	35-45
Duck	cookware, uncovered	1		180-190	-	25+20
Turkey, crown****	cookware, uncovered	1		150-160	-	20+15
Turkey, thighs	cookware, uncovered	1		170-180	-	25+30
Turkey, whole, 4-8 kg*****	universal pan	1		150-160	-	12+12
Meat dishes						
Meat loaf	cookware, uncovered	1		170-180	-	20+35
Meat loaf, 1 kg + 50 ml water	cookware, uncovered	1		170-190	360	30-40

* Preheat
** skin side down
*** without fat layer (best and neck), do not turn
**** bone side down, do not turn
***** turn after app. 1 hour

Dish	Accessories/cookware	Shelf position	Type of heating	Temperature in °C	MW power in watts	Time in min.
Casserole						
Diced meat (beef, pork, lamb), 500 g meat	cookware, covered	1		140*	-	100-120
Braising steak	cookware, covered	1		140	-	65+60
Chicken pieces (boned), 500 g meat	cookware, covered	1		140*	-	90-100
Complete meal						
With beef	wire rack + uncovered cookware on wire rack	3+1		160, then 200 (Yorkshire Pudding)	-	calculation for meat (see table above) + 15-25 for Yorkshire Pudding
With chicken	wire rack + uncovered cookware on wire rack	3+1		180	-	calculation for chicken (see table above)

* Preheat
** skin side down
*** without fat layer (best and neck), do not turn
**** bone side down, do not turn
***** turn after app. 1 hour

Tips on roasting and braising

The cooking compartment becomes very dirty.	Prepare your food in an enclosed roaster with higher temperature or use the grill tray. You will achieve the best roasting results if you use the grill tray. The grill tray can be bought later as a special accessory.
The roast is too dark and the crackling is burned in places, and/or the roast is too dry.	Check the shelf position and temperature. Select a lower temperature the next time and reduce the roasting time if necessary.
The crackling is too thin.	Increase the temperature or switch on the grill briefly at the end of the roasting time.
The roast looks good but the juices are burnt.	Next time, use a smaller roasting dish and add more liquid if necessary.
The roast looks good but the juices are too clear and watery.	Next time, use a larger roasting dish and add less liquid if necessary.
The meat gets burned during braising.	The roasting dish and lid must fit together well and close properly. Reduce the temperature and add more liquid when braising if necessary.
The roast is not well-done enough.	Carve the roast. Prepare the sauce in the roasting dish and add the sliced roast meat to the sauce. Finish cooking the meat using the microwave only.

Grilling

Here, you can find information on grilling poultry, meat and fish, as well as toast. You can find the ideal settings for certain dishes in the settings tables.

Grilling with circulated air

Circulated air grilling is very well suited to the preparation of whole poultry, fish, and also meat, e.g. roast pork with crackling.

Poultry
For duck or goose, pierce the skin on the underside of the wings. This allows the fat to run out.

If using duck breast, score the skin. Do not turn duck breasts.

When you turn poultry, ensure that the breast side or the skin side is underneath at first.

Poultry will turn out particularly crispy and brown if you baste it towards the end of the roasting time with butter, salted water or orange juice.

Meat
Baste lean meat with fat as required or cover it with strips of bacon.

Score the rind crosswise. If you turn the joint when cooking, ensure that the rind is underneath at first.

When the joint is ready, turn off the oven and allow it to rest for another 10 minutes in the cooking compartment. This allows the meat juices to be better distributed. Wrap the joint in aluminium foil if necessary. The recommended resting time is not included in the cooking time indicated.

Fish
Fish cooked whole does not have to be turned. Place the whole fish into the cooking compartment in

swimming position with the dorsal fin facing upwards. Placing half a potato or a small oven-proof container in the stomach cavity of the fish will provide stability.

You can tell when the fish is cooked because the dorsal fin can be removed easily.

Roasting on the wire rack

On the wire rack, poultry and meat will become very crispy on all sides. Roasting on the wire rack is well suited for larger poultry or for multiple pieces at the same time.

Depending on the size and type of the meat, add up to ½ litres of water to the universal pan. Any dripping fat and meat juices will be caught. You can prepare a sauce using these meat juices. In addition, less smoke is generated, and the cooking compartment stays cleaner.

Slide the wire rack in at the indicated shelf position with the imprint "Microwave" facing the appliance door and the outer rail facing downwards. In addition, slide the universal pan in at the shelf position underneath with the slanted edge facing the appliance door.

Roasting in cookware

It is more convenient to roast and braise meat in cookware. You can take the joint out of the cooking compartment more easily in the cookware, and prepare the sauce in the cookware itself.

Only use cookware which is suitable for use in an oven. Check whether the cookware fits in the cooking compartment.

Glass cookware is most suitable. Place hot glass cookware onto a dry mat after cooking. If the surface is damp or cold, the glass may crack.

Add in a little liquid if the meat is lean. A covering of approx. ½ cm depth should be applied to the base of any glass cookware.

The quantity of liquid is dependent on the type of meat, the cookware material and also on whether or not a lid is used. If preparing poultry, meat or fish in an enamelled or dark metal roasting dish, it will need a little more liquid than if cooked in glass cookware.

The steam evaporates in the cookware when roasting. Carefully pour in more liquid if required.

Shiny roasting dishes made from stainless steel or aluminium reflect heat like a mirror and are therefore not particularly suitable. The meat cooks more slowly and will not brown so much. Use a higher temperature and/or a longer cooking time.

Observe the manufacturer's instructions for your roasting cookware.

Uncovered cookware
Use a deep roasting tin/dish for roasting meat. Place the tin/dish onto the wire rack. If you do not have any suitable cookware, use the universal pan.

Covered cookware
When cooking with covered cookware, the cooking compartment remains considerably cleaner. Ensure that the lid fits well and closes properly. Place the cookware onto the wire rack.

The distance between the meat and the lid must be at least 3 cm. The meat may rise.

Very hot steam may escape when opening the lid after cooking. Lift the lid at the rear, so that the hot steam can escape away from you.

If necessary, braise the meat first by searing it. Add water, wine, vinegar or a similar liquid to the braising liquid. A covering approx. 1-2 cm deep should be applied to the base of the cookware.

The steam evaporates in the cookware when roasting. Carefully pour in more liquid if required.

Meat can also become crispy in a covered roasting dish. To do so, use a roasting dish with a glass lid and set a higher temperature.

Roasting in combination with a microwave

Certain foodstuffs can be prepared in combination with a microwave. The cooking time is considerably reduced by doing so.

As opposed to conventional operation, the cooking time is based on the total weight when roasting in combination with a microwave.

Tip: If you have quantities other than those indicated in the settings tables, the following basic rule applies: double the quantity equates to roughly double the cooking time.

Always use heat-resistant cookware that is suitable for use in microwaves. Roasting dishes made from metal or Römertopf dishes are only suitable for roasting without using the microwave. Observe the notes on cookware suitable for microwaves. ⟶ *"Microwave" on page 19*

Caution!

If you use an oven bag, do not seal it shut with metal clips. Use kitchen string. Do not use metal skewers for roulades. Sparks may form as a result.

Grilling flat pieces

Flat pieces of poultry, meat and fish, such as steaks, drumsticks and burgers, can be prepared well using the "Grill" heating type. Excellent results are also achieved when grilling toast.

Grilling

Keep the appliance door closed when using the grill. Never grill with the appliance door open.

Slide the wire rack in at the indicated shelf position with the imprint "Microwave" facing the appliance door and the outer rail facing downwards. In addition, slide the universal pan in at least one shelf position lower, with the slanted edge facing the appliance door. Any dripping fat will be caught.

When grilling, try wherever possible to use pieces of food which are of a similar thickness and weight. This will allow them to brown evenly and remain succulent and juicy. Place the food to be grilled directly onto the wire rack.

Use tongs to turn the pieces of food you are grilling. If you pierce the meat with a fork, the juices will run out and it will become dry.

Do not add salt until after the meat has been grilled. Salt draws water from the meat.

Notes

- The grill element switches itself continuously on and off; this is normal. The grill setting determines how frequently this occurs.
- Smoke may be produced when grilling.

Recommended setting values

In the table, you can find the ideal heating type for your poultry, meat and fish, in addition to toast. Temperature and cooking time depend on the quantity, composition and temperature of the food. Settings ranges are indicated for this reason. Try using the lower values at first. You can use a higher setting next time if necessary.

The setting values are based on the assumption that unstuffed, chilled, ready-to-roast poultry, meat and fish are placed into a cold cooking compartment.

In the table, you can find specifications for poultry, meat and fish with default values for the weight. If you wish to prepare heavier poultry, meat or fish, use the lower temperature in every case. If roasting several joints, use the weight of the heaviest piece as a basis for determining the cooking time. The individual pieces should be approximately equal in size.

A general rule: the larger the poultry, meat or fish is, the lower the cooking temperature and the longer the cooking time.

Turn the poultry, meat and fish after approx.½ to ⅔ of the indicated time.

Remove unused accessories from the cooking compartment. This will achieve the best possible cooking results and energy savings of up to 20 per cent.

Cooking time calculation (e. g. 20**+**35):
Please calculate the cooking time with 20 minutes per 500 g meat + 35 minutes additional time. For 1,5 kg the calculated cooking time would be 95 minutes.

Cooking time range (e. g. 10**-**15):
The food is done within the stated minutes.

Types of heating used:

- Circulated air grilling
- Grill, large area

Dish	Accessories/cookware	Shelf position	Type of heating	Temperature in C / Grill setting	MW power in watts	Time in min.
Beef						
Steaks, height 2-3 cm	wire rack	2		3	-	1st side 8-10
						2nd side 5-7
Burger, height 1-2 cm	wire rack	2		3*	-	1st side 6-8
						2nd side 4-6
Top side / Top rump	wire rack	2		150-160	-	30+30
Lamb						
Steaks, height 2-3 cm	wire rack	2		3*	-	1st side 8-10
						2nd side 4-6
Chops, height 2-3 cm	wire rack	2		3	-	1st side 6-8
						2nd side 6-8
Leg (bone-in)	cookware, uncovered	1		170-180	-	25+30
Shoulder (bone-in)	cookware, uncovered	1		170-190	-	25+15
Shoulder (boned and rolled)	cookware, uncovered	1		170-180	-	20+15
Rack of lamb	cookware, uncovered	1		190-200	-	15+25
Pork						
Steaks, height 2 cm	wire rack	3		2	-	1st side 12-14
						2nd side 6-8
Chops, height 2-3 cm	wire rack	2		3*	-	1st side 10-12
						2nd side 9-10
Burger, height 1-2 cm	wire rack	2		3*	-	1st side 6-8
						2nd side 4-6

* Preheat
**Preheat 3 minutes
*** Preheat 5 minutes
**** Preheat 3 minutes, turn over several times
***** Skin side down

Dish	Accessories/cookware	Shelf position	Type of heating	Temperature in C / Grill setting	MW power in watts	Time in min.
Bacon rashers	wire rack	2		3***	-	1st side 4-5
						2nd side 3-4
Sausages, thickness 2-4 cm	wire rack	2		3****	-	10-15
Roasting joint	cookware, uncovered	1		180-200	-	30-40
Loin joint	cookware, uncovered	1		170-180	-	35+35
Belly	cookware, uncovered	1		200-220	-	30+25
Gammon joint	cookware, uncovered	2		180-200	-	30+25
Poultry						
Chicken drumstick, 150 g each	wire rack	2		210-230	-	20-30
Chicken breast, boned, 150 g each	wire rack	2		3**	-	1st side 10-15
						2nd side 10-15
Chicken breast, boned, 2 pieces 150 g each	cookware, uncovered	1		190-210	180	25-30
Chicken, whole	wire rack	1		200-220	-	25+15
Chicken, whole, 1 kg	cookware, covered	1		230-250	360	25-35
Chicken, portion, 200-250 g each*****	wire rack	2		200-220	-	30-45
Chicken, portion 4 pieces 250 g each*****	cookware, uncovered	1		190-210	360	20-30
Duck, 2-3 kg	cookware, uncovered	1		190-200	-	20+20
Duck, 2 kg	universal pan	1		170-190	180	60-80
Turkey thighs	cookware, uncovered	1		180-190	-	25+30
Turkey, whole, 4-8 kg	universal pan	1		140-160	-	12+12
Fish						
Trout, whole, 300 g each	cookware, uncovered	1		170-190	-	20-30
Trout, whole, 300 g each	wire rack	2		2	90	15-20
Fillets, each 150 g	wire rack	2		1**	-	1st side 5-10
						2nd side 5-10
Toast						
Grilling white bread	wire rack	3		3	-	2-6

* Preheat
**Preheat 3 minutes
*** Preheat 5 minutes
**** Preheat 3 minutes, turn over several times
***** Skin side down

Convenience products

Here, you can find the ideal settings for preparing chilled and frozen food.

Only use original accessories supplied with your appliance. These have been tailored to the cooking compartment and the operating modes of your appliance.

Tips

- The cooking result greatly depends on the quality of the food. Pre-browning and unevenness may already be present on the packaged product.
- Do not use frozen products that are heavily frosted. Remove any ice on the food.
- Distribute foods which are in pieces, such as bread rolls and potato products, so that they are spread flat and evenly on the accessories. Leave a little space between the individual pieces.
- Observe the instructions on the packaging.

Preparing food in combination with a microwave

If you prepare food in combination with a microwave, you can reduce the cooking time considerably.

Always use heat-resistant cookware that is suitable for use in microwaves. Observe the notes on cookware suitable for microwaves. ⟶ *"Microwave" on page 19*

In combined operation, you can use conventional baking tins made from metal. If sparks form between the baking tin and the wire rack, check whether the baking tin is clean on the outside. Change the position of the baking tin on the wire rack. If this does not help, continue preparing without the microwave. The cooking time will be extended.

If you use baking tins/dishes made from plastic, ceramic or glass, the cooking time indicated in the settings tables will be reduced.

Cooking in combination with a microwave is only possible on one level.

Take ready-to-eat meals out of the packaging. You can cook more quickly and evenly using cookware which is suitable for use in microwaves.

Shelf positions

Use the indicated shelf positions.

Baking on one level
When baking on one level, use the following shelf position:
- Level 1

Baking on two levels
Use 4D hot air. Baked items that are placed into the oven on trays or in baking tins/dishes at the same time will not necessarily be ready at the same time.
- Universal pan: Level 3
  Baking tray: Level 1

Accessories

Ensure that you always use suitable accessories and that they are placed in the oven the right way around.

Wire rack
Slide the wire rack in with the embossed "microwave" facing the appliance door, and the curved lip pointing downwards. Always place ovenware, tins and dishes on the wire rack.

Universal pan or baking tray
Slide the universal pan or the baking tray in carefully as far as the limit stop with the bevelled edge facing the appliance door.

Greaseproof paper
Only use greaseproof paper that is suitable for the selected temperature. Always cut greaseproof paper to size.

Recommended setting values

In the table, you can find the ideal heating type for various dishes. Temperature and cooking time depend on the quantity and composition of the product. Setting ranges are indicated for this reason. Try using the lower values at first. A lower temperature results in more even browning. You can use a higher setting next time if necessary.

Note: Cooking times cannot be reduced by using higher temperatures. The dish would only be cooked on the outside, but would not be fully cooked in the middle.

The setting values apply to dishes placed into a cold cooking compartment. By doing so, you can make energy savings of up to 20 per cent. If you preheat the oven, the indicated cooking times will be reduced by several minutes.

Preheating is necessary for selected dishes, and this is indicated in the table.

Remove unused accessories from the cooking compartment. This will achieve the best possible cooking results and energy savings of up to 20 per cent.

Types of heating used:
- 4D hot air
- Top/bottom heating
- Pizza setting
- coolStart function

Dish	Accessories/cookware	Shelf position	Type of heating	Temperature in °C	MW power in watts	Cooking time in mins.
Pizza, chilled						
Pizza, chilled	wire rack	1		210-230	-	10-20
Pizza, frozen						
Pizza, thin base*	wire rack	1		-	-	-
Pizza, thin base, 2 levels	2 wire racks	3+1		200-220	-	15-25
Pizza, thick base*	wire rack	1		-	-	-
Pizza, thick base, 2 levels	2 wire racks	3+1		160-180	-	25-35
Pizza baguette	wire rack	1		200-220	-	20-30
Pizza baguette, 2 pieces	universal pan	1		180-200	90	10-20
Potatoe products, frozen						
Oven chips*	baking tray	1		-	-	-

* Observe information on the packaging
** Turn during cooking

Dish	Accessories/cookware	Shelf position	Type of heating	Temperature in °C	MW power in watts	Cooking time in mins.
Oven chips, 2 levels**	universal pan + baking tray	3+1		200-220	-	30-40
Croquettes*	baking tray	1		-	-	-
Hash browns*	universal pan	2		-	-	-
Potatoe wedges*	baking tray	1		-	-	-
Baked goods, frozen, prebaked						
Rolls, baguettes*	universal pan	2		-	-	-
Rolls, baguettes, 2 levels	grid + universal pan	3+1		160-180	-	15-25
Fried food, frozen						
Fish fingers*	baking tray	1		-	-	-
Chicken nuggets*	universal pan	2		-	-	-
Food, chilled						
Lasagna, 500 g	ovenproof dish on wire rack	1		180-200	-	30-40
Lasagna, 1,5 kg	ovenproof dish on universal pan	1		180-200	-	35-45
Food, frozen						
Lasagna, 500 g*	ovenproof dish on universal pan	1		-	-	-
Lasagna, 500 g	ovenproof dish on wire rack	1		200-210	360	18-23
Lasagna, 1,5 kg	ovenproof dish on wire rack	1		160-180	-	60-80

* Observe information on the packaging
** Turn during cooking

Microwave

Preparing food in a microwave is ideal if time is of the essence.

Place the cookware onto the wire rack. Always use heat-resistant cookware that is suitable for use in microwaves. Observe the notes on cookware suitable for microwaves. ⟶ *"Microwave" on page 19*

Slide the wire rack in at the indicated shelf position with the imprint "Microwave" facing the appliance door and the outer rail facing downwards.

Food which lies flat will cook more quickly than food which is piled high. Arrange the food as flat as possible in the cookware for this reason.

Cereal products foam a lot during cooking. For all cereal products, such as rice, use tall cookware with a lid.

This will help the food retain its flavour. This means that you can use salt and seasonings sparingly.

If you cannot find any indicated settings for your food quantity, you should extend or reduce the cooking time according to the following basic rule: double the quantity equates to roughly double the cooking time.

Stir or turn the food two to three times during this time. After heating up the food, leave it to rest for two to three minutes to compensate for the temperature difference.

The food transfers heat to the cookware. It can become very hot when only using the microwave for preparation.

Shelf position

Slide the wire rack in at level 1 with the cookware on it.

Steaming fish in the microwave

You can also steam fish in the microwave.

To do so, use enclosed cookware that is suitable for microwave use or use a plate or microwave film to cover the dish. Observe the notes on cookware suitable for microwaves. ⟶ *"Microwave" on page 19*

This will help retain the flavour and means you can use salt and seasonings sparingly. If cooking fish whole, add one to three tablespoons of water or lemon juice.

After cooking, leave the fish to rest for another 2-3 minutes to compensate for the temperature difference.

Take ready-to-eat meals out of the packaging. You can cook more quickly and evenly using cookware which is suitable for use in microwaves.

Custard made from custard powder

Mix custard powder with milk and sugar in a tall, microwave-suitable container according to the information on the packaging. Use the settings indicated in the table.

As soon as the milk starts to rise, stir thoroughly. Repeat this step two to three times.

Making rice pudding

1. Weigh the rice and add 4 times as much milk.
2. Pour the rice and milk into a tall container which is suitable for microwave use.
3. Use the settings indicated in the table.
4. As soon as the milk starts to rise, stir thoroughly and reduce the microwave power as indicated in the table.
   Stir several times whilst it continues to cook.

Compote

Weigh the fruit in a microwave-suitable container and add a tablespoon of water for every 100 g. Add sugar and spices according to taste. Cover the container and use the settings indicated in the table.

Stir two to three times during the cooking time.

Microwave popcorn

Use flat, heat-resistant glass cookware, e.g. the lid of an ovenproof dish. Do not use porcelain or heavily curved plates.

Place the popcorn bag onto the cookware with the labelled side facing downwards. Use the settings indicated in the table. The time may need to be adjusted, depending on the product and quantity in question.

Remove the popcorn bag after 1½ minutes and shake it to ensure that the popcorn doesn't burn. Wipe the cooking compartment clean after preparation.

⚠ Warning – Risk of burns!
Airtight packaging may burst when food is heated. Always observe the instructions on the packaging. Always use oven gloves to remove dishes from the cooking compartment.

Recommended setting values

Tip: You can find additional applications which only use the microwave in sections "Defrosting" and "Heating food".

Type of heating used:
- Microwave

Dish	Accessories/cookware	Shelf position	Type of heating	MW power in watts	Cooking time in mins.
Fish					
Fish fillet, plain, braised, 400 g	cookware, covered	1		600	4
				360	3-8
Vegetables, fresh					
Vegetable, fresh, 250 g*	cookware, covered	1		600	8-12
Vegetable, fresh, 500 g*	cookware, covered	1		600	12-17
Vegetables, frozen					
Spinach, 450 g*	cookware, covered	1		600	13-18
Mixed vegetables, 250 g + 25 ml water*	cookware, covered	1		600	10-14
Mixed vegetables, 500 g + 25 ml water*	cookware, covered	1		600	15-20
Rice					
Long-grain rice, 250 g + 500 ml water	cookware, covered	1		600	7-9
Long-grain rice, 250 g + 500 ml water	cookware, covered	1		180	13-16
Brown rice, 250 g + 650 ml water	cookware, covered	1		600	11-13
Brown rice, 250 g + 650 ml water	cookware, covered	1		180	25-30
Risotto, 250 g + 900 ml water	cookware, covered	1		600	12-14
Risotto, 250 g + 900 ml water	cookware, covered	1		180	22-27
Cereals					
Couscous, 250 g + 500 ml water	cookware, covered	1		600	6-8
Dessert					
Custard out of custard powder*	cookware, covered	1		600	5-8
Rice pudding, 125 g + 500 ml milk*	cookware, covered	1		600	10
Rice pudding, 125 g + 500 ml milk *	cookware, covered	1		180	20-25

* Turn 1-2 times during cooking
** Lay unopened package on the cookware

Dish	Accessories/cookware	Shelf position	Type of heating	MW power in watts	Cooking time in mins.
Fruit compote, 500 g	cookware, covered	1		600	9-12
Microwavepopcorn, 1 package á 100 g**	cookware, uncovered	1		600	4-6
* Turn 1-2 times during cooking ** Lay unopened package on the cookware					

Yogurt

You can make your own yogurt using your appliance.

Making yoghurt

Remove accessories and shelf supports from the cooking compartment. The cooking compartment must be empty. Do not open the appliance door while the appliance is in operation.

1. Heat 1 litre of milk (3.5% fat) to 90 °C on the hob and then leave it to cool down to 40 °C. It is sufficient to heat UHT milk to 40 °C.
2. Stir in 150 g (chilled) yoghurt.
3. Pour into cups or small jars and cover with cling film.
4. Place the cups or jars onto the cooking compartment floor and use the settings indicated in the table.
5. After making the yoghurt, leave it to cool in the refrigerator.

Type of heating used:
- Top/bottom heating

Dish	Cookware	Shelf position	Type of heating	Temperature in °C	Cooking time in hours
Yoghurt	individual moulds	cooking compartment floor		40-45	8-9

Eco heating functions

Hot air eco and Top/bottom heating eco are intelligent heating functions that allow you to gently cook meat, fish and baked items. The appliance optimally controls the supply of energy to the cooking compartment.The food is cooked in phases using residual heat. This means that it remains more succulent and browns less. Depending on the method of preparation and the type of food, it is possible to save energy. If you open the appliance door before the food has finished cooking or if you preheat the appliance, you may not be able to achieve this result.

Only use genuine accessories for your appliance. These have been tailored to the cooking compartment and the operating modes of your appliance.Remove any accessories that are not being used from the cooking compartment.

Place the food into the empty cooking compartment before the oven is heated up. For Hot air eco, select a temperature of between 125 and 275 °C, and for Top/bottom heating eco, select a temperature of between 150 and 250 °C. Always keep the appliance door closed when cooking. Only cook on one level when using this function.

The Hot air eco heating function is used to measure both the energy consumption in air recirculation mode and the energy efficiency class. The Top/bottom heating eco heating function is used to measure the energy consumption in the conventional mode.

Accessories

Ensure that you always use suitable accessories and that they are placed in the oven the right way around.

Wire rack
Slide the wire rack in with the embossed "microwave" facing the appliance door, and the curved lip pointing downwards. Always place ovenware, tins and dishes on the wire rack.

Universal pan or baking tray
Slide the universal pan or the baking tray in carefully as far as the limit stop with the bevelled edge facing the appliance door.

Baking tins and cookware
Dark- coloured metal baking tins are most suitable. These allow you to make energy savings of up to 35 per cent.

Cookware made from stainless steel or aluminium reflects heat like a mirror. Non-reflective cookware made from enamel, heat-resistant glass or coated, die-cast aluminium is more suitable.

Tinplate baking tins, ceramic dishes or glass dishes prolong baking time, and the cake will not brown so evenly.

Greaseproof paper
Only use greaseproof paper that is suitable for the selected temperature. Always cut greaseproof paper to size.

Recommended setting values

Here, you can find specifications for various dishes. The temperature and baking time are dependent on the quantity and composition of the dough. Different settings ranges are indicated for this reason. Try using the lower values at first. A lower temperature results in more even browning. If necessary, use a higher setting the next time.

Note: Baking times can not be reduced by using higher temperatures. Cakes or baked items would only be cooked on the outside, but would not be cooked completely in the middle.

Types of heating used:
- Hotair Eco
- Top/bottom heating Eco

Dish	Accessories/cookware	Shelf position	Type of heating	Temperature in °C	Cooking time in mins.
Baking					
Victoria sponge cake	2x Ø20 cm tins	1		170-180	25-35
Light fruit cake	high Ø20 cm tin	1		150-170	70-90
Rich Fruit Cake	high Ø23 cm tin	1		140-160	120-180
Fruit crumble	flat glass dish	1		160-180	40-60
Sponge cake (fatless), 3 eggs	springform cake tin, Ø26 cm	1		160-170	25-35
Swiss Roll	swiss roll tin	1		180-200	10-20
Fruit Pie	plate Ø20 cm or pie tin	1		170-190	60-75
Quiche	quiche tin (dark coated)	1		190-210	35-45
(White) Bread	loaf tin (1x 900 g or 2x 450 g)	1		190-200	45-55
Scones	baking tray	1		190-210	15-20
Biscuits	baking tray	2		140-160	15-30
Jam tarts	12-cup-tin	1		170-190	15-30
Soufflé	1,2 L-soufflé dish	1		160-170	40-50
Meat Pie	rectangular pie tin	1		190-210	40-55
Jacket potatoes	baking tray	2		150-170	60-90
Meat					
Beef, slow roast joint	wire rack	1		140+150	35+40
Casserole					
Diced meat (beef, pork, lamb), 500 g meat	cookware, covered	1		140	100-120
Braising steak	cookware, covered	1		140	65+60
Fish					
Fish, braised, whole 300 g, e.g. trout	cookware, covered	1		190-210	25-35
Fish, braised, whole 1,5 kg, e.g. salmon	cookware, covered	1		190-210	45-55
Fish fillet, plain, braised, 100 g	cookware, covered	1		190-210	15-35

Acrylamide in foodstuffs

Acrylamide is mainly produced in grain and potato products prepared at high temperatures, such as potato crisps, chips, sliced bread, bread rolls, bread or fine baked goods (biscuits, gingerbread, spiced biscuit).

Tips for keeping acrylamide to a minimum	
General	■ Keep cooking times as short as possible. ■ Cook food until it is golden brown, but not too dark. ■ Large, thick pieces of food contain less acrylamide.
Baking	With top/bottom heating at max. 200 °C. With hot air at max. 180 °C.
Biscuits	With top/bottom heating at max. 190 °C. With hot air at max. 170 °C. Egg or egg yolk reduces the production of acrylamide.
Oven chips	Spread out a single layer evenly on the baking tray. Cook at least 400 g at once on a baking tray so that the chips do not dry out.

Slow cook

Slow cooking is a technique for cooking food over a long period at low temperatures. For this reason, it is also called "low-temperature cooking".

Slow cooking is ideal for all prime cuts (e.g. tender portions of beef, veal, pork, lamb or poultry) which are to be cooked "à point". The meat will remain succulent and tender.

The benefit of this cooking method is that it allows lots of scope for menu planning because slow-cooked meat is easy to keep warm. You do not have to turn the meat when cooking. Keep the appliance door closed in order to maintain an even cooking climate.

Only use fresh, clean and hygienic meat without bones. Carefully remove sinews and fat from around the edge. Fat develops a strong, distinct flavour during slow cooking. You can also use seasoned or marinated meat. Do not use defrosted meat.

Meat can be carved immediately following slow cooking. No standing time is required. Due to the special cooking method, the meat looks pink, but is not raw or undercooked.

Note: Delayed-start operation with an end time is not possible for the slow cooking heating type.

Cookware

Use flat cookware, e.g. a glass/porcelain serving dish. Place the cookware into the cooking compartment to preheat it.

Always place the uncovered cookware onto the wire rack at level 1.

You can find additional information in the tips on slow cooking attached to the settings table.

Your appliance features the heating type "Slow cook". Only start operation when the cooking compartment has fully cooled down. Allow the cooking compartment to warm up for around 10 minutes with the cookware inside.

Sear the meat on the hotplate at a very high heat and for a sufficiently long time on all sides, even on the ends. Place into the preheated cookware right away. Place the cookware containing the meat into the cooking compartment once again and cook slowly.

Recommended setting values

The slow cooking temperature and cooking time are dependent on the size, thickness and quality of the meat. Different settings ranges are indicated for this reason.

Type of heating used:
- Slow cooking

Dish	Cookware	Shelf position	Heating function	Searing time in mins	Temperature in °C	Cooking time in mins
Poultry						
Duck breast, medium rare, 300 g each	Cookware, uncovered	1		6-8	95*	45-60
Chicken breast fillet, 200 g each, well done	Cookware, uncovered	1		4	120*	45-60
Turkey breast, boned, 1 kg, well done	Cookware, uncovered	1		6-8	120*	100-130
Pork						
Pork tenderloin steak, 5-6 cm thick, 1.5 kg	Cookware, uncovered	1		6-8	85*	130-180
Fillet of pork, whole	Cookware, uncovered	1		4-6	85*	45-70
Beef						
Joint of beef (rump), 6-7 cm thick, 1.5 kg	Cookware, uncovered	1		6-8	100*	150-190
Fillet of beef, 1 kg	Cookware, uncovered	1		4-6	85*	90-120
Sirloin, 5-6 cm thick	Cookware, uncovered	1		6-8	85*	120-180
Beef medallions/rump steak, 4 cm thick	Cookware, uncovered	1		4	85*	40-60
Veal						
Joint of veal, 4-5 cm thick, 1.5 kg	Cookware, uncovered	1		6-8	85*	100-130
Joint of veal, 7-10 cm thick, 1.5 kg	Cookware, uncovered	1		6-8	85*	150-210
Fillet of veal, whole, 800 g	Cookware, uncovered	1		4-6	85*	70-120
Veal medallions, 4 cm thick	Cookware, uncovered	1		4	80*	40-60

* Preheat

Dish	Cookware	Shelf position	Heating function	Searing time in mins	Temperature in °C	Cooking time in mins
Lamb						
Saddle of lamb, boneless, 200 g each	Cookware, uncovered	1		4	85*	30-45
Leg of lamb, boned, medium, 1 kg, tied	Cookware, uncovered	1		6-8	95*	120-180
* Preheat						

Tips for slow cooking

Slow-cooking duck breast.	Place the cold duck breast into a pan and fry the skin side first. After slow cooking, grill for 3 to 5 minutes until crispy.
The slow-cooked meat is not as hot as conventionally roasted meat.	So that the roasted meat does not cool so quickly, warm the plates and serve the sauces very hot.

Drying

With 4D hot air, you can dry foods with outstanding results. With this type of preserving, flavourings are concentrated by the dehydration.

Only use unblemished fruit, vegetables and herbs and wash them thoroughly. Line the wire rack with greaseproof paper or parchment paper. Drain the excess water from the fruit and dry it.

If necessary, cut it into equal chunks or thin slices. Place unpeeled fruit onto the dish with the sliced surfaces facing upwards. Ensure that neither fruit nor mushrooms overlap on the wire rack.

Grate vegetables and then blanch them. Allow the blanched vegetables to drain off and distribute them evenly on the wire rack.

Dry herbs on the stem. Position the herbs evenly and slightly heaped on the wire rack.

Use the following shelf positions for drying:
- 1 wire rack: Level 2
- 2 wire racks: Level 3+1

Turn very juicy fruit and vegetables several times. After drying, remove the dried products from the paper immediately.

Recommended setting values

In the table, you can find settings for drying various foodstuffs. The temperature and cooking time are dependent on the type, moisture, ripeness and thickness of the food to be dried. The longer you leave the food to be dried, the better it will be preserved. The thinner the slices are, the quicker the drying process will be and the more aromatic the dried food will remain. Setting ranges are indicated for this reason.

If you wish to dry additional foodstuffs, you should use similar foodstuffs in the table as a reference.

Type of heating used:
- 4D hot air

Dish	Accessories	Shelf position	Type of heating	Temperature in °C	Cooking time in hours
Pomes (apple rings, 3 mm thick, 200 g per wire rack)	Wire rack	2		80	4-7
Stone fruit (plums)	Wire rack	2		80	8-10
Root vegetables (carrots), grated, blanched	Wire rack	2		80	4-7
Sliced mushrooms	Wire rack	2		60	6-8
Herbs, washed	1-2 wire racks	-		60	2-6

Preserving

You can preserve fruit and vegetables using your appliance.

⚠ Warning – Risk of injury!
If the food is preserved incorrectly, the preserving jars may burst. Follow the instructions for preserving.

Jars

Use only clean and undamaged preserving jars. Only use heat-resistant, clean and undamaged rubber rings. Check clips and clamps in advance.

For each preserving process, only use preserving jars that are the same size and contain the same food. In the cooking compartment, you can preserve the contents of a maximum of six ½, 1 or 1½-litre preserving jars at the same time. Do not use jars that are larger or taller than this. The lids could rupture.

Preserving jars must not touch one another in the cooking compartment during the preserving process.

Preparing fruit and vegetables

Only use fruit and vegetables that are in good condition. Wash them thoroughly.

Peel, core and chop fruit and vegetables appropriate to their type and fill the preserving jars with them up to approx. 2 cm below the rim.

Fruit
Fill the preserving jars with the fruit along with a hot, skimmed sugar solution (approx. 400 ml for a 1-litre jar). For one litre of water:
- Approx. 250 g sugar for sweet fruit
- Approx. 500 g sugar for sour fruit

Vegetables
Fill the jars with the vegetables along with hot, boiled water.

Wipe the rims of the jars, as they must be clean. Place a damp rubber ring and a lid on each jar. Seal the jars with clamps. Place the jars into the universal pan so that they do not touch each other. Pour 500 ml hot water (approx. 80 °C) into the universal pan. Use the settings indicated in the table.

Ending the preserving process

Fruit
After a short while, small bubbles will form at short intervals. Switch off the appliance once all preserving jars are bubbling. Remove the jars from the cooking compartment after the indicated cooling time.

Vegetables
After a short while, small bubbles will form at short intervals. As soon as all preserving jars are bubbling, reduce the temperature to 120 °C and allow the jars to continue to bubble in the closed cooking compartment as indicated in the table. After this time has elapsed, switch off the appliance and make use of the residual heat for several minutes as indicated in the table.

After preserving, remove the jars from the cooking compartment and place them onto a clean cloth. Do not place these hot jars onto a cold or damp surface, as they may crack. Cover the preserving jars to protect them from draughts. Only remove the clamps once the jars are cold.

Recommended setting values

The indicated times in the settings table are average values for preserving fruit and vegetables. They may be influenced by room temperature, the number of jars, quantity, heat and quality of the jar contents. The specifications are based on 1-litre round jars. Before you switch off the appliance or change the cooking mode, check whether the contents of the jars are bubbling as they should. The bubbling process starts after approx. 30-60 minutes.

Type of heating used:
- 4D hot air

Dish	Cookware	Shelf position	Type of heating	Temperature in °C	Cooking time in mins.
Preserving					
Vegetables, e.g. carrots	1-litre preserving jars	1	4D hot air	160-170	Before it starts bubbling: 30-40
				120	When it starts to bubble: 30-40
				-	Residual heat: 30
Vegetables, e.g. cucumbers	1-litre preserving jars	1	4D hot air	160-170	Before it starts bubbling: 30-40
				-	Residual heat: 30
Stone fruit, e.g. cherries, damsons	1-litre preserving jars	1	4D hot air	160-170	Before it starts bubbling: 30-40
				-	Residual heat: 35
Pomes, e.g. apples, strawberries	1-litre preserving jars	1	4D hot air	160-170	Before it starts bubbling: 30-40
				-	Residual heat: 25

Prove dough

You can prove yeast dough in your appliance more quickly than at room temperature. Use the top/bottom heating type. Only start operation when the cooking compartment has fully cooled down.

Always allow yeast dough to prove twice. Observe the specifications in the settings tables for the 1st and 2nd proving processes (dough fermentation and final fermentation).

Dough fermentation
Use the settings indicated in the table and heat up the appliance. Position the dough bowl on the wire rack.

Do not open the appliance door during the proving process, as moisture will escape. Cover the dough with a damp cloth.

Final fermentation
Place your baked item into the oven at the shelf position indicated in the table.

If you want to preheat the oven, the final fermentation takes place outside the appliance in a warm place.

Recommended setting values

The temperature and proving time are dependent on the type and quantity of the ingredients. The values in the table are therefore only meant to be average values.

Type of heating used:
- Top/bottom heating

Dish	Accessories/cookware	Shelf position	Type of heating	Temperature in °C	Cooking time in mins.
Yeast dough, light	Bowl	1		35-40	25-30
	Baking tray	1		35-40	10-20
Yeast dough, heavy and rich	Bowl	1		35-40	20-40
	Baking tray	1		35-40	15-25

Defrosting

Use the "Microwave" operation mode to defrost frozen fruit, vegetables, poultry, meat, fish and baked items.

Remove the frozen food from its packaging and place it onto the wire rack in cookware suitable for microwave use. Observe the notes on cookware suitable for microwaves. ⟶ *"Microwave" on page 19*

Slide the wire rack in with the imprint "Microwave" facing the appliance door and the outer rail facing downwards.

Remove unused accessories from the cooking compartment. This will allow you to achieve optimum cooking results and save energy.

Recommended setting values

The times in the table are average values. They are dependent on the quality, freezing temperature (-18 °C) and composition of the food. Time ranges are indicated. Set the shortest time first and then extend the time if necessary. You can often achieve better results when defrosting in several steps. These are indicated one below the other in the table.

Tip: Items which were frozen flat or portioned defrost faster than those frozen in a block.

Stir the food or turn it once or twice in between. Large pieces of food should be turned several times. Occasionally split the food or remove items which have already defrosted from the cooking compartment.

Leave the defrosted food to rest for another 10 to 30 minutes in the appliance whilst it is switched off, so that the temperature balances out.

Tip: If you have quantities other than those indicated in the settings table, this basic rule will help: double the quantity equates to roughly double the cooking time.

Type of heating used:
- Microwave

Dish	Accessories/cookware	Shelf position	Type of heating	Temperature in °C	MW power in watts	Cooking time in mins.
Bread, bread rolls						
Bread, 500 g	Cookware, uncovered	1		-	180	3
				-	90	10-15
Bread rolls	Wire rack	1		140-160	90	2-4
Cake						
Cake, moist, 500 g	Cookware, uncovered	1		-	180	2
				-	90	10-15
* Turn halfway through cooking time						

Dish	Accessories/cookware	Shelf position	Type of heating	Temperature in °C	MW power in watts	Cooking time in mins.
Cake, dry, 750 g	Cookware, uncovered	1		-	90	10-15
Meat and poultry						
Chicken, whole, 1.2 kg*	Cookware, uncovered	1		-	180	10
				-	90	10-15
Poultry portions, 250 g*	Cookware, uncovered	1		-	180	10
				-	90	10-15
Duck, 2 kg*	Cookware, uncovered	1		-	180	10
				-	90	40-50
Whole pieces of meat, e.g. joint (raw meat), 800 g	Cookware, uncovered	1		-	180	15
				-	90	10-15
Whole pieces of meat, e.g. joint (raw meat), 1 kg*	Cookware, uncovered	1		-	180	15
				-	90	20-30
Whole pieces of meat, e.g. joint (raw meat), 1.5 kg*	Cookware, uncovered	1		-	180	15
				-	90	25-35
Meat, in pieces or slices, e.g. goulash (raw meat), 500 g*	Cookware, uncovered	1		-	180	8
				-	90	5-10
Minced meat, mixed, 200 g*	Cookware, uncovered	1		-	90	8-15
Minced meat, mixed, 500 g*	Cookware, uncovered	1		-	180	5
				-	90	10-15
Minced meat, mixed, 1000 g*	Cookware, uncovered	1		-	180	10
				-	90	20-30
Fish						
Fish, whole, 300 g*	Cookware, uncovered	1		-	180	3
				-	90	10-15
Fish fillet, 400 g*	Cookware, uncovered	1		-	180	5
				-	90	10-15
Fruit, vegetables						
Berries, 300 g	Cookware, uncovered	1		-	180	5-10
Vegetables, 600 g	Cookware, uncovered	1		-	180	10
				-	90	8-13
Miscellaneous						
Defrosting butter, 125 g	Cookware, uncovered	1		-	90	7-9
* Turn halfway through cooking time						

Heating food in a microwave

Using the microwave, you can heat food, or defrost and heat it in a single step.

Take ready-to-eat meals out of the packaging. The food will heat up more quickly and evenly in cookware that is suitable for microwaves. The various components of a dish may require different times to heat up.

Food which lies flat will cook more quickly than food which is piled high. Arrange the food as flat as possible in the cookware for this reason. Food should not be vertically stacked.

Cover the food. This will ensure better cooking results. If you do not have a lid that fits your cookware, use a plate or microwave film for this purpose.

Stir food two to three times during cooking and turn it if necessary. After heating food up, leave it to rest for 1 to 2 minutes to compensate for the temperature difference.

If you are heating up baby food, place the bottle onto the wire rack without the teat or the lid. After heating up, shake well or stir and be sure to check the temperature.

The food transfers heat to the cookware. It can become very hot when only using the microwave for preparation.

Tip: If you have quantities other than those indicated in the settings table, this basic rule will help: double the quantity equates to roughly double the cooking time.

⚠ Warning – Risk of scalding!
There is a possibility of delayed boiling when a liquid is heated. This means that the liquid reaches boiling temperature without the usual steam bubbles rising to the surface. Even if the container only vibrates a little, the hot liquid may suddenly boil over and spatter. When heating, always place a spoon in the container. This will prevent delayed boiling.

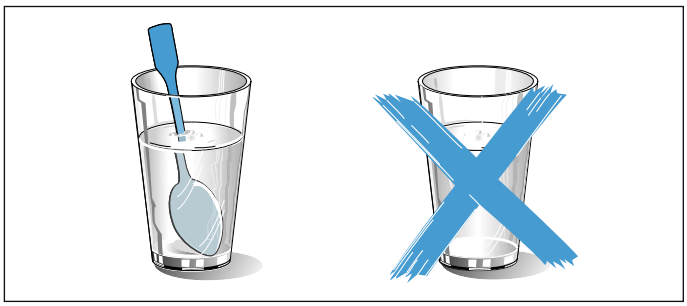

Caution!
Creation of sparks: Metal – e.g. a spoon in a glass – must be kept at least 2 cm from the cooking compartment walls and the inside of the door. Sparks can irreparably damage the glass on the inside of the door.

Recommended setting values

In the table, you can find the setting values for heating various drinks and foodstuffs up in the microwave. The times specified are only average values. These depend on the cookware used, the quality, temperature and composition of the food in question. Time ranges are indicated. Set the shortest time first and then extend the time if necessary.

The values in the table apply to food placed into a cold cooking compartment.

If no values are indicated for your food, use similar foods in the table as orientation.

Remove any accessories from the cooking compartment which are not being used. This will ensure optimum cooking results and will also save energy.

Wipe the cooking compartment clean after cooking.

Type of heating used:
- Microwave

Dish	Cookware	Shelf position	Type of heating	Temperature in °C	MW power in watts	Cooking time in mins.
Heating drinks						
200 ml (stir well)	Cookware, uncovered	1		-	max	1-3
400 ml (stir well)	Cookware, uncovered	1		-	max	2-6
Heating baby food						
Baby bottles, 150 ml (stir well)	Cookware, uncovered	1		-	360	1-3
Vegetables, chilled						
250 g	Cookware, covered	1		-	600	3-8
Vegetables, frozen						
loose, 250 g	Cookware, covered	1		-	600	8-12
Creamed spinach, frozen block, 450 g	Cookware, covered	1		-	600	11-16
Dishes, chilled						
Plated meal, 1 portion	Cookware, covered	1		-	600	4-8
Soup, stew, 400 ml	Cookware, covered	1		-	600	5-7
Side dishes, e.g. pasta, dumplings, potatoes, rice	Cookware, covered	1		-	600	5-10
Bakes, 400 g, e.g. lasagne, potato gratin	Cookware, uncovered	1		-	600	5-10
Dishes, frozen						
Plated meal, 1 portion	Cookware, covered	1		-	600	11-15
Soup, stew, 200 ml (stir well)	Cookware, covered	1		-	600	4-6
Side dishes, 500 g, e.g. pasta, dumplings, potatoes, rice	Cookware, covered	1		-	600	7-10
Bakes, 400 g, e.g. lasagne, potato gratin	Cookware, uncovered	1		180-200	180	20-25

Keeping warm

You can keep cooked dishes warm using the "Keeping warm" heating type. This will avoid condensation developing, and means you will not have to wipe out the cooking compartment.

Do not keep cooked dishes warm for longer than two hours. Be aware that some dishes may continue cooking whilst being kept warm. Cover the dishes if necessary.

Test dishes

These tables have been produced for test institutes to facilitate the inspection of the appliance.

As per EN 60350-1:2013 and IEC 60350-1:2011 and as per standard EN 60705:2012, IEC 60705:2010.

Baking

Baked items that are placed into the oven on trays or in baking tins/dishes at the same time will not necessarily be ready at the same time.

Shelf positions for baking on two levels:
- Universal pan: Level 3
  Baking tray: Level 1

Apple pie
Apple pie on one level: place dark-coloured springform cake tins diagonally next to each other.

Cakes in tinplate springform cake tins: bake on one level with top/bottom heating. Place the springform cake tin onto the universal pan instead of onto the wire rack.

Fatless sponge cake
Fatless sponge cake on two levels: vertically stack springform cake tins in an offset manner on the wire racks.

Notes

- The setting values apply to dishes placed into a cold cooking compartment.
- Please note the information in the tables about preheating. The setting values are valid without rapid heating-up.
- For baking, use the lower of the indicated temperatures first.

Types of heating used:
- 4D hot air
- Top/bottom heating
- Pizza setting

Dish	Accessories/cookware	Shelf position	Type of heating	Temperature in °C	Cooking time in mins.
Baking					
Shortbread	Baking tray	1	Top/bottom heating	150-160*	20-30
Shortbread	Baking tray	1	Pizza setting	140-150*	25-35
Small cakes	Baking tray	1	Top/bottom heating	160*	25-35
Small cakes	Baking tray	1	Pizza setting	150*	20-30
Small cakes, 2 levels	Universal pan + baking tray	3+1	Pizza setting	140*	30-40
Fatless sponge cake	Springform cake tin, diameter 26 cm	1	Top/bottom heating	160-170**	25-35
Fatless sponge cake	Springform cake tin, diameter 26 cm	1	Pizza setting	160-170**	30-45
Apple pie	2 x black plate tins, diameter 20 cm	1	Top/bottom heating	180-200	60-70
Apple pie	2 x black plate tins, diameter 20 cm	1	Pizza setting	170-180	60-80

* Preheat for 5 mins, do not use quick heat function

** Preheat, do not use quick heat function

Grilling

Also slide in the universal pan. The liquid will be caught and the cooking compartment stays cleaner.

Type of heating used:
- Grill, large area

Dish	Accessories	Shelf position	Type of heating	Grill setting	Cooking time in mins.
Grilling					
Browning toast	Wire rack	3	Grill, large area	3	2-6
Beefburgers, x 12*	Wire rack	2	Grill, large area	3	20-30

* Turn after 2/3 of the total time

Preparing food with a microwave

When preparing food in a microwave, always use heat-resistant cookware that is suitable for microwave use. Observe the notes on cookware suitable for microwaves. ⟶ *"Microwave" on page 19*

When you place your cookware onto the wire rack, slide the wire rack in with the embossed "microwave" facing the appliance door, and the curved lip pointing downwards.

Note: To test in microwave mode only, switch off the drying function in the basic settings. ⟶ *"Basic settings" on page 18*

Types of heating used:
- 4D hot air
- Circulated air grilling
- Microwave

Dish	Accessories/cookware	Shelf position	Type of heating	Temperature in °C	MW power in watts	Cooking time in mins.
Microwave defrosting						
Meat	Cookware, uncovered	1	Microwave	-	180	5
					90	10-15
Microwave cooking						
Egg wash	Cookware, uncovered	1	Microwave	-	360	20
					180	20-25
Sponge flan	Cookware, uncovered	1	Microwave	-	600	7-9
Meat loaf	Cookware, uncovered	1	Microwave	-	600	22-27
Combined microwave cooking						
Potato gratin	Cookware, uncovered	1	Circulated air grilling	150-170	360	25-30
Cake	Cookware, uncovered	1	4D hot air	190-210	180	12-18
Chicken*	Cookware, uncovered	1	Circulated air grilling	180-200	360	25-35
* Turn after 2/3 of the total time						

BSH Hausgeräte GmbH
Carl-Wery-Str. 34
81739 München

GERMANY

Manufactured by BSH Hausgeräte GmbH under Trademark License of Siemens AG

siemens-home.bsh-group.com

9001221235 (990731)