Home Appliances

KD-NHL2S9GWE-EN

Tumble Dryer

EN User Manual

SHARP

Be Original.

CONTENTS

1.QUICK START.....5
2.PRIMARY CONSIDERATIONS 6
3.DISPOSING THE OLD PRODUCT.....9
4.SAFETY INSTRUCTIONS.....10
4.1 Electrical Safety.....10
4.2 Children's Safety.....11
4.3 Product Safety.....12
5.UV RADIATION SAFETY.....14
6.CORRECT USE 16
7.INSTALLING ON TOP OF A WASHING MACHINE.....17
8.INSTALLATION.....18
8.1 Connection to Water Outlet (with optional drain hose).....18
8.2 Connecting the Water Drain Hose.....18
8.3 Adjusting the Feet.....18
8.4 Electrical Connection.....18
8.5 Adjusting the Adjustable Feet.....19
8.6 Positioning the Machine on the Ground.....19
9.OVERVIEW.....20
10.PREPARING THE LAUNDRY.....21
10.1 Sorting the Laundry to be Dried.....21
11.PREPARING THE LAUNDRY TO BE DRIED.....22
11.1 Load Capacity.....22
12.USING THE TUMBLE DRYER.....23
12.1 Control Panel..... 23
12.2 Programme Selection Knob.....24
12.3 Electronic Indicator and Display.....24
13.PROGRAMME SELECTION AND CONSUMPTION TABLE.....25
14.AUXILIARY FUNCTIONS.....26
15.Remote Access Settings (description of Android and ios Applications).....27
15.1 To enable Wi-Fi:.....27
16.Warnings Regarding Wi-Fi Mode.....29
16.1 Wireless LAN Features.....29
17.STARTING THE PROGRAMME.....30
17.1 Drum Light Information..... 32
18.Programs Versus Options Activation Availability Table.....33
19.CLEANING AND CARE.....35

19.1 Cleaning the Lint Filters.....35
19.2 Emptying the Water Tank.....35
19.3 Cleaning the Heat Exchanger.....36
19.4 Cleaning the Humidity Sensor.....36
19.5 Cleaning the Inner Surface of the Loading Door.....36
20.MACHINE SOUND.....37
21.TECHNICAL SPECIFICATIONS.....38
22.TROUBLESHOOTING.....39
23.AUTOMATIC FAULT WARNINGS AND WHAT TO DO.....41
24.ENVIRONMENTAL PROTECTION AND PACKAGING INFORMATION.....42
24.1 Packaging Information.....42
24.2 Technical Data.....42
24.3 Energy Efficiency.....42
25.CUSTOMER CARE AND SERVICE.....43

Thank you for choosing this product.

This User Manual contains important safety information and instructions on the operation and maintenance of your appliance.

Please take the time to read this User Manual before using your appliance and keep this book for future reference.

Icon	Caption	Description
	WARNING	Risk of serious injury or death
	RISK OF ELECTRIC SHOCK	Dangerous voltage
	FIRE	Risk of fire
	ATTENTION	Risk of injury or material damage
	IMPORTANT/NOTE	Information on correct operation of the system
	Read the instructions.	
	Hot surface	

1. QUICK START

Please check the user manual for detailed information.

1 Seperate your clothes according to their types, place into the machine and close the door.

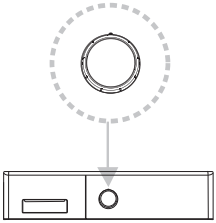

2 Select the suitable programme for your laundry by rotating the adjustment knob.

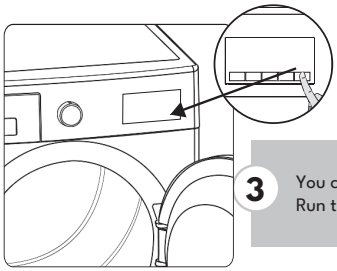

3 You can select additional functions for drying.
Run the programme by pushing Start / Pause button.

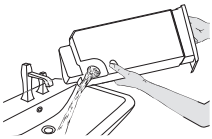

4 After the drying program is completed, the water tank must be emptied.
*** Please check the user manual for detailed information.

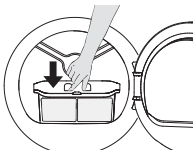

5 After the drying program is completed, the filter must be cleaned.
*** Please check the user manual for detailed information.

2. PRIMARY CONSIDERATIONS

This appliance can be used by adults who can use it securily and aware of the risks.

Children can't play with the appliance. Cleaning and maintenance must be done only by adults.

- Keep out of reach of pets
- Do not leave children unattended near the appliance
- Keep the packaging materials out of reach of children
- Do not allow children sit, climb or get in to the appliance
- This tumble dryer is intended only for household and indoor use. The warranty will be void in case of commercial use.
- Use this product only for laundry with a label that indicates it is suitable for drying.
- The manufacturer will not accept responsibility for damages resulting from incorrect use or transport.
- The service life time of your tumble dryer is 10 years. This is the period during which the spare parts required for the tumble dryer to operate properly will be commercially available.
- Do not allow floor coverings to obstruct the ventilation openings.
- Installation and repair of the machine should only be made by an authorised repair agent. The manufacturer cannot be held responsible for damages resulting from self repair or any kind of unauthorized non-professional repairs.

⚠ **WARNING:** Never spray or pour water onto the dryer to wash it! There is risk of electric shock!

Leave at least 3 cm of space between the side and rear walls of the product and above if you plan on placing your appliance under a worktop.

Assembly / disassembly for under-counter installation if neccessary must be done by an authorised service agent.

- Before installation, check the product for visible damage. Never install or operate a damaged product.
- Keep pets away from the dryer.
- Fabric softeners or similar products should be used in accordance with the manufacturers instructions.
- Remove all foreign objects from pockets such as lighters and matches.
- The appliance must not be installed behind a lockable door, a sliding door or a door with a hinge on the opposite side to that of the tumble dryer, if it prevents the door from being fully opened.

⚠**WARNING:** In the appliance enclosure or in the built-in structure, keep ventilation openings clear of obstruction.

- Before contacting the local Authorised Service Provider for the installation of the dryer, check the information in the user manual to make sure that the electrical installation and water outlet is suitable. If they are not, call a qualified electrician and a plumber to have the necessary adjustments made.
- It is the customer's responsibility to prepare the dryer's installation place, as well as the electricity and waste water installation. Before installation, check the dryer for damage. If damaged, do not have it installed. Damaged products may endanger your health.
- Install the dryer on a stable and flat surface.
- Run the dryer in a dust-free environment where the air ventilation is good.
- The clearance between the dryer and the floor **should not be** reduced with objects such as carpets, wood or tape.
- **Do not block the ventilation grills** found on the plinth of the tumble dryer.

- The appliance must not be installed behind a lockable door, a sliding door or a door with a hinge on the opposite side of the tumble dryer, in such a way that blocks the full opening of the tumble dryer door.
- Once the dryer has been installed, the connections must remain stable. When installing the dryer, make sure that the rear surface is not leaning on anything (e.g. tap, socket).
- The operating temperature of the dryer is +5˚C to +35˚C. If operated out of this temperature range, the performance of the dryer will be affected negatively and the product will be damaged.
- Be careful when carrying the product since it is heavy. Always wear safety gloves.
- Always install the product should be placed against a wall.
- The rear surface of the product should be placed against the wall.
- When the product is placed on a stable surface, use a water level to check if it is fully stable. If not, adjust the feet until it becomes steady. Repeat this process every time you relocate the product.
- Do not place the dryer onto the power cable.

3. DISPOSING THE OLD PRODUCT

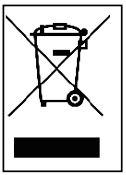

This product complies with EU WEEE Directive (2012/19/EU). This product bears a classification symbol for waste electrical and electronic equipment (WEEE).

This symbol, which is found on the product or information label, indicates that this product must not be disposed together with other household waste at the end of its service life. To prevent the potential harms of uncontrolled waste disposal on the environment and human health, please keep this product separate from other types of waste, and to prevent sustainable reuse of material resources, make sure that it is recycled responsibly. Contact your dealer or local authorities to get information on how and where you can take the product for environmentally-safe recycling. This product cannot be mixed with other commercial wastes for recycling.

4. SAFETY INSTRUCTIONS

This section contains safety instructions that will help protect you from risk of personal injury or property damage. Failure to follow these instructions will void any warranty.

4.1 Electrical Safety

- The appliance must not be supplied through an external switching device, such as a timer, or connected to a circuit that is regularly switched on and off by a utility.
- Do not touch the power plug with wet hands. Always pull the plug to unplug the product, otherwise, there will be risk of an electric shock.
- Connect the dryer to a grounded socket with fuse protection. The earth connection must be installed by a qualified electrician. Our company cannot be held responsible for damages/losses resulting from using the dryer without an earth connection as required by local regulations.
- The voltage and the allowable fuse protection are indicated on the type plate.**(For the type plate, please see Overview)**
- Voltage and frequency values indicated on the type plate must be equal to the mains voltage and frequency value in your house.
- Unplug the dryer when it is not used for an extended period, and before installation, maintenance, cleaning and repair, otherwise, the dryer may get damaged.
- The plug socket must be freely accessible at all times after installation.

⚠ To avoid the risk or fire or electric shock, do not use extension cords, multi sockets or adapters to connect the dryer to mains power.

4.2 Children's Safety

- This appliance can be used by adults who can use it securily and aware of the risks.
- Children can’t play with the appliance. Cleaning and maintenance must be done only by adults.
- Keep out of reach of pets
- Do not leave children unattended near the appliance
- Keep the packaging materials out of reach of children
- Do not allow children sit, climb or get in to the appliance
- Do not leave children unattended near the machine.
- Children might lock themselves in the machine resulting in risk of death.
- Do not allow children to touch the glass door during operation. The surface becomes extremely hot and may cause skin damage.
- Keep packaging material away from children.
- Poisoning and irritation may occur if detergent and cleaning materials are consumed or come into contact with the skin and eyes.
- Keep cleaning materials out of the reach of children Electrical products are dangerous for children.
- Keep children away from the product while it is running.
- To prevent children from interrupting the dryer cycle, you can use the child lock to avoid any changes in the running programme.
- Do not allow children to sit/climb on or climb inside the product.
- Children of less than 3 years should be kept away unless continuously supervised.

4.3 Product Safety

⚠ Due to risk of fire, the following laundry items and products should NEVER be dried in the dryer:

- Do not dry unwashed items in the tumble dryer.
- Items that have been soiled with substances such as cooking oil, acetone, alcohol, petrol, kerosene, spot removers, turpentine, waxes and wax removers should be washed in hot water with an extra amount of detergent before being dried in the tumble dryer.
- Cleaning cloths and mats that have residues of flammable cleaning agents or acetone, gas, patrol, stain remover, turpentine, candle, wax, wax remover or chemicals.
- Laundry that has residues of hair sprays, nail polish remover and similar substances.
- Laundry on which industrial chemicals have been used for cleaning (such as chemical cleaning).
- Laundry that has any kind of foam, sponge, rubber or rubber-like parts or accessories. These include latex foam sponge, shower caps, waterproof fabrics, fitted clothes, and foam pillows.
- Items with filling and damaged (parts or jackets). Foam protruding from these items might catch fire during the drying process.
- Operating the dryer in environments that contain flour or coal dust may cause explosion.

⚠ **ATTENTION:** Underwear that contains metal reinforcements should not be put in the dryer. The dryer may be damaged if metal reinforcements come loose and break off during drying.

If possible, please leave the door open between cycles.

⚠ **FIRE:** R290

Risk of fire and damage!

This product contains enviromental friendly but flammable R290 gas. Keep open flame and fire sources away from the product.

5. UV RADIATION SAFETY

- This warning only applies to models with Purebeam / Crystalight + Pro Technology.
- The tumble dryer contains a LED that emits invisible UV-C rays. Do not look directly at the light source while the UV-C LED is operating. It may cause damage to skin and eyes even at low doses in case of direct exposure.
- The blue light switches on when UV-C technology is enabled.
- The UV-C LED and the blue light source switches off if the door is opened while the machine is running.
- When the door of the machine is closed, UV-C rays do not go out of the machine.
- Purebeam / Crystalight + Pro Technology is used in textile products and certain personal items to provide hygiene.
- The tumble dryer should not be used other than its intended use.
- Textile products suitable for drying should be used in programs involving Purebeam / Crystalight + Pro Technology.
- Items other than textile products should not be dried in programs involving Purebeam / Crystalight + Pro drying technology.
- Electronic and magnetic devices (credit cards, etc.) should not be put into the machine in programs involving Purebeam / Crystalight + Refresh program.
- Damage to the UV-C LED may result in the emission of hazardous UV-C radiation. For this reason, do not operate the damaged product and call the technical service center.
- Call the technical service center for replacement of the parts related with UV-C LED.

- You must not change the UV-C LED and related parts by yourself. Make sure that the machine is unplugged while waiting for the technical service personnel.
- UV-C LED should not be disposed of with household waste.
- Children should be kept away while programs involving Purebeam / Crystalight + Pro technology are active.
- No attempt should be made to disinfect living beings in Purebeam / Crystalight + Drying programs.
- No attempt should be made to disinfect human skin in Purebeam / Crystalight + Drying programs.
- No attempt should be made to clean flammable items, packaged and open food, products that contact with food, electronic devices (tablet, phone, computer, etc.), magnetic devices (credit card, public transport card, etc.) in Purebeam /Crystalight + Pro programs.
- Make sure that the items to be cleaned in the Purebeam / Crystalight + Refresh program are resistant to UV-C rays.
- Items to be cleaned in the Purebeam / Crystalight + Refresh program should not be placed directly in the drum.
- The items to be cleaned must be placed properly into the plastic dryer rack to be mounted to the dryer.
- Personal items such as wallets, coins, keys, key chains, etc. to be cleaned in the dryer rack in the Purebeam / Crsytalight Refresh program should be placed in such a way that they do not fall into the drum over the dryer rack.
- Personal items should not be placed on top of each other in the plastic dryer rack in the Purebeam / Crystalight + Refresh program.

6. CORRECT USE

ATTENTION: Never stop a tumble dryer before the end of the drying cycle unless all items are quickly removed and spread out so that the heat is dissipated.

ATTENTION: Make sure that pets do not enter the dryer. Check the inside of the dryer before using it.

ATTENTION: Superheating of clothes inside the dryer can occur if you cancel the programme or in the event of a power failure whilst the dryer is running. This concentration of heat can cause self-combustion so always activate the Refresh programme to cool down or quickly remove all laundry from the dryer in order to hang them up and dissipate the heat.

- Use the dryer only for household drying and to dry fabrics with a label that indicates they are suitable for drying. All other uses are out of the scope of intended use and are prohibited.
- The warranty will be void in case of any commercial use.
- This appliance is designed to be used inside domestic residences only, and should be placed on a straight and stable surface.
- Do not lean against or sit on the door of the dryer. The dryer may tip over.
- To maintain a temperature that will not harm the laundry (e.g. to prevent the laundry from catching fire), a cooling process starts after the heating process. After this, the programme ends. At the end of the programme, always remove the laundry promptly.

ATTENTION: Never use the dryer without a lint filter or with a damaged lint filter.

- Lint filters must be cleaned <u>after each use</u> as indicated in **Cleaning the Lint Filter.**
- Wet filters might cause malfunction during the drying process. Please do not put a wet lint filter into the tumble dryer.
- Lint accumulation must not to be allowed around the tumble dryer (not applicable for appliances intended to be vented to the exterior of the building)

IMPORTANT: The clearance between the dryer and the floor should not be reduced with objects such as carpets, wood or panel, otherwise, sufficient air intake cannot be ensured for the machine.

- Do not install the dryer in rooms where there is risk of freezing. Freezing temperatures negatively affect the dryers performance.Condensed water that freezes in the pump and hose may cause damage.

7. INSTALLING ON TOP OF A WASHING MACHINE

ATTENTION: A washing machine cannot be placed on the dryer. Pay attention to the warnings below when installing the dryer on a washing machine.

ATTENTION: The dryer can only be placed on washing machines that have a same capacity and above.

To use the dryer on the washing machine, a fixing part must be used between the two products. The fixing part must be attached by an Authorised Service Provider.

When the dryer is placed on the washing machine, the total weight of these products may reach almost 150 kilograms (when loaded). Place the products on a solid floor that has a load bearing capacity!

Appropriate Installation Table for Washing Machine and Tumble Dryer					
Tumble Dryer (Depth)	**Washing Machine**				
	36-40 cm	**41-45 cm**	**46-49 cm**	**50-56 cm**	**57-63 cm**
52,5 cm	X	✓	✓	✓	✓
56 cm	X	X	✓	✓	✓
61 cm	X	X	X	✓	✓
64 cm	X	X	X	X	✓

(For the depth information, please see 7. Technical Specifications)

In order to put the dryer machine onto the washing machine, a special stacking kit is required as an optional extra. Please contact customer service to acquire. The assembly instruction will be served together with the stacking kit.

CE Declaration of conformity

We declare that our products meet the applicable European Directives, Decisions and Regulations and the requirements listed in the standards referenced.

8. INSTALLATION

8.1 Connection to Water Outlet (with optional drain hose)

In products with condenser unit, water accumulates in the water tank during the drying process. Instead of emptying the water tank after each drying cycle, you can discharge the water directly with the connection of water drain hose supplied with the drying machine.

8.2 Connecting the Water Drain Hose

1. Pull and take out the end of the hose at the back of the dryer. Do not use any tools to take out the hose.
2. Fit one end of the water drain hose, which is provided with the product, to the slot from which you have removed the hose.
3. Fix the other end of the water drain hose directly to the water outlet or sink.

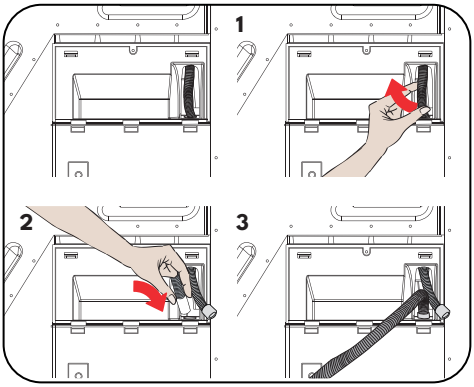

ATTENTION: The hose must be connected in a manner that it cannot be displaced. If the hose comes out during water discharge, there might be flooding in your house.

IMPORTANT: The water drain hose must be installed at a height of 80 cm maximum.

IMPORTANT: The water drain hose must not be bent between the outlet and the product, folded or stepped over.

8.3 Adjusting the Feet

For the dryer to work with less noise and vibration, it must be stable and balanced on its feet. Adjust the feed to ensure that the product is balanced.

Rotate the feet to the right and to the left until the dryer is even and stable.

IMPORTANT: Never remove the adjustable feet.

8.4 Electrical Connection

ATTENTION: There is risk of fire and electric shock.

- Your dryer is set to 220-240 V and 50 Hz.
- The mains cable of the dryer is equipped with a special plug. This plug must be connected to an earthed socket protected by a fuse of 16 Amperes as indicated on the type plate. The fuse current rating of the power line where the outlet is connected must also be 16 amperes. Consult a qualified electrician if you do not have such an outlet or fuse.
- Our company cannot be held responsible for damages resulting from usage without earthing.

IMPORTANT: Operating your machine at low voltage values will shorten the service life and decrease the performance of your machine.

8.5 Adjusting the Adjustable Feet

- Leave at least 3 cm of space between the side and rear walls of the product and the underside of the worktop when installing your product under a counter.
- Assembly / disassembly under the counter if neccessary must be done by authorized service.
- In order for the dryer to operate more quietly and without vibration, it must stand on its feet properly and be balanced. Make this balance by adjusting the feet.
- Adjust by turning the feet to the right and left until the dryer stands level and balanced.
- Product should not be placed on sloping, uneven and crooked floors.

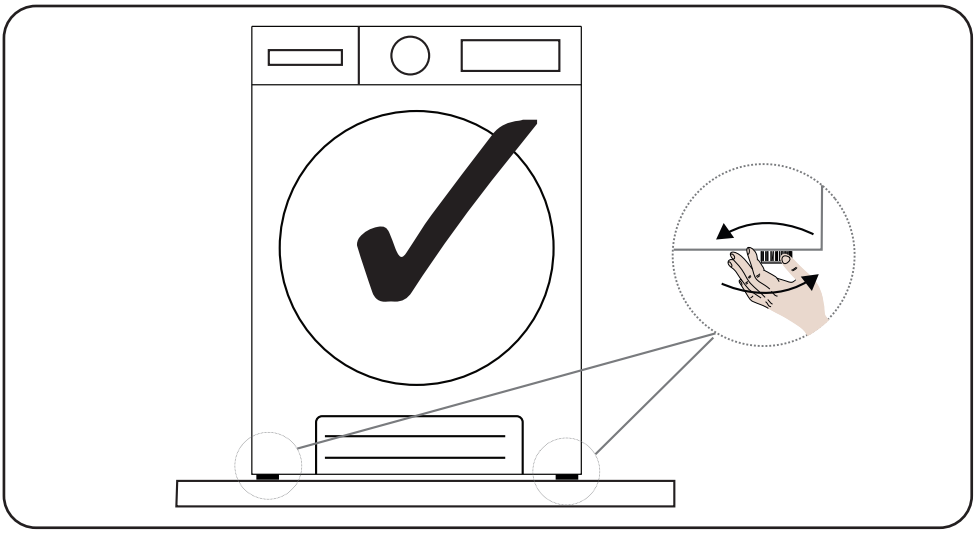

8.6 Positioning the Machine on the Ground

The tumble dryer must be positioned on a flat surface. It should not be placed on sloping, angled floors.

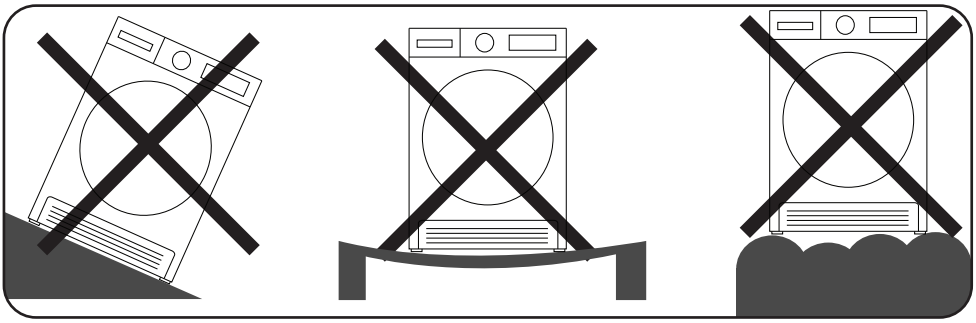

9. OVERVIEW

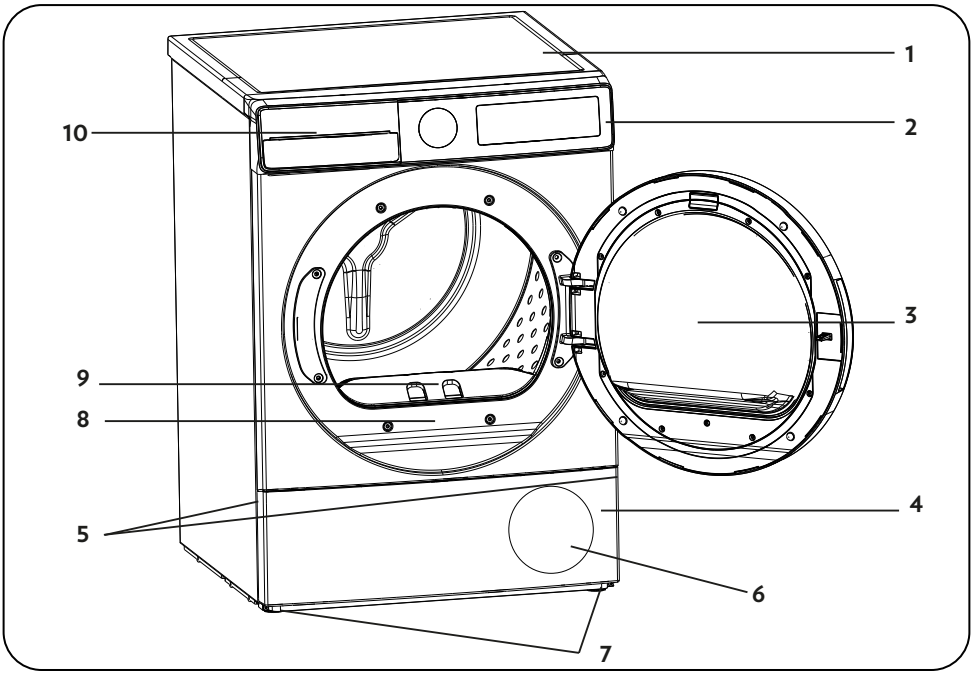

1. Upper tray
2. Control panel
3. Loading door
4. Plinth
5. Plinth opening slot
6. Ventilation grills
7. Adjustable feet
8. Type plate
9. Lint filter
10. Drawer Cover

10. PREPARING THE LAUNDRY

10.1 Sorting the Laundry to be Dried

Follow the instructions on the labels of the laundry to be dried. Only dry items that have a statement/ symbol that indicates "they can be dried in a dryer".

- Do not operate the product with load amounts and laundry types other than those given in 4.3. Load Capacity.

Suitable for drying in a dryer	Does not need ironing	Sensitive/Delicate drying	Not suitable for drying in a dryer
No drying	Do not dry-clean	At any temperature	At high temperatures
At medium temperatures	At low temperatures	Heatless	Hang to dry
Spread to dry	Hang wet to dry	Spread in shadow to dry	Suitable for dry cleaning

Do not dry thin, multi-layer or thick-layer fabrics together as they dry at different levels. For this reason, dry clothes together that have the same structure and fabric type. This way, you can get an even drying result. If you think that the laundry is still wet, you can select a time programme for additional drying.

Please dry your big (like duvets) and small sizes of laundries seperately in order to not to have a damp laundries.

IMPORTANT: Delicate fabrics, embroided fabrics, woolen clothes*, silk fabrics, clothes made of delicate and expensive fabrics, recycled fabrics, airtight clothes, tulle curtains, items made from rubber or plastics, fiberglass items, clothes with metal embroided parts, leather fabrics are not suitable for drying in the dryer.

*Dry woolen clothes on the Wool program if it is available depending on the dryer model. Be sure to follow Wool program instructions.

11. PREPARING THE LAUNDRY TO BE DRIED

Risk of explosion and fire!

Remove all foreign objects from pockets such as lighters and matches

ATTENTION: The drum of the dryer and the fabrics may get damaged.

- The clothes may have become entangled during the washing process. Separate them from each other before placing them in the dryer.
- Remove all objects in the pockets of the clothes and apply the following:
- Tie fabric belts, apron laces etc. to each other or use a laundry bag.
- Lock the zips, clasps and fasteners, do up the buttons of covers.
- To get the best drying result, sort the laundry according to the textile type and drying programme.
- Remove clips and similar metal parts from the clothes.
- Woven goods such as t-shirts and knit clothes **generally shrink in the first drying.** Use a protective programme.
- **Do not over-dry synthetics. This will cause creases.**
- When washing the laundry to be dried, adjust the amount of softener according to the data from the manufacturer of the washing machine.

11.1 Load Capacity

Follow the instructions in the "Programme selection and consumption table". **(See: 5.2 Programme selection and consumption table).** Do not load the product with more laundry than the capacity values specified in the table.

IMPORTANT: It is not recommended to load the dryer with more laundry than the amount shown in the figure. When overloaded, the drying performance of the dryer will decrease and the dryer and laundry might be damaged.

Laundry (per piece)	Dry load weight (gr)
Bedsheet (double)	725
Pillowcase	240
Bath Towel	700
Hand Towel	225
Shirt	190
Cotton Shirt	200
Jean	650
Fabric - Gabardine Trousers	400
T-shirt	120

12. USING THE TUMBLE DRYER

12.1 Control Panel

The user interface and icons may change according to your product. Please select the one which is suitable to your product.

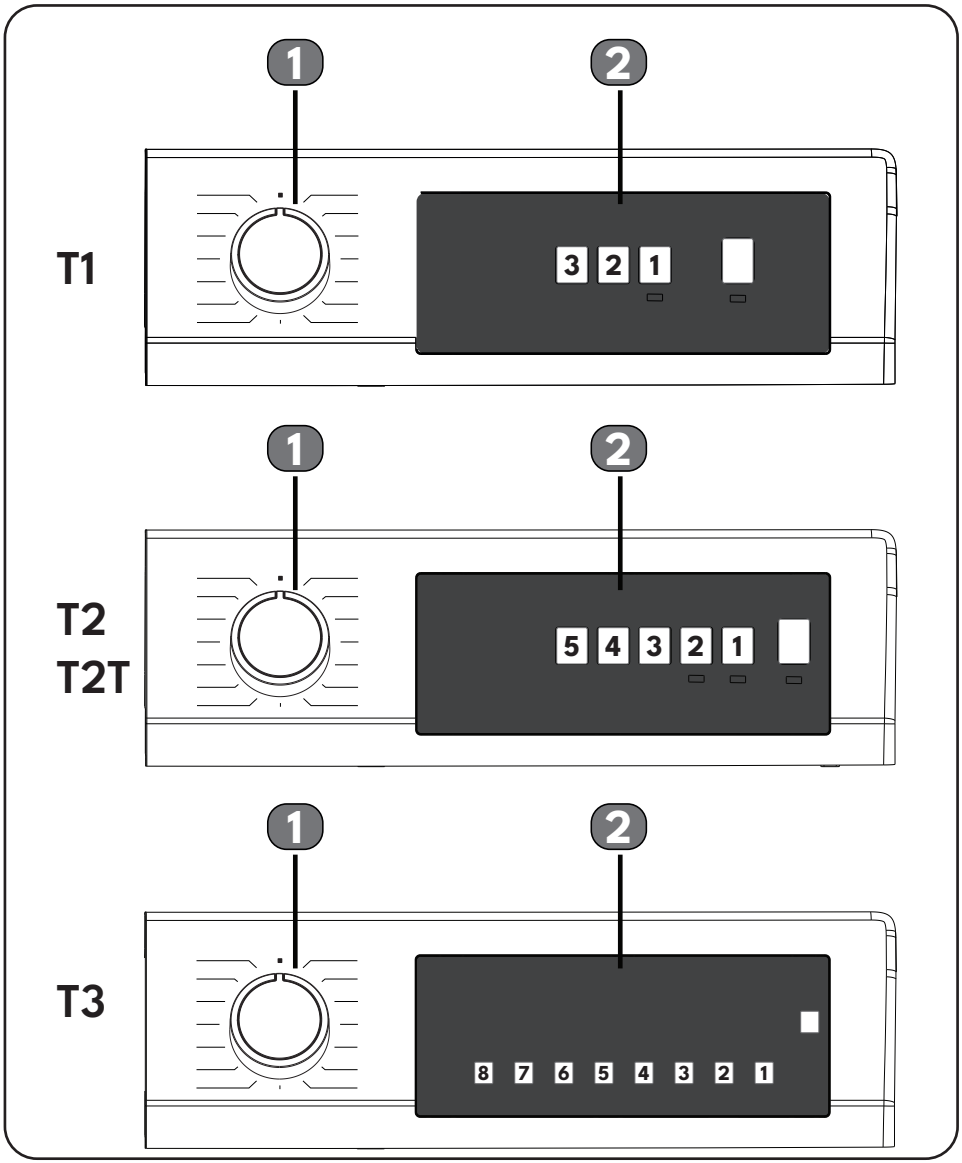

12.2 Programme Selection Knob

Use the programme selection knob to select the desired drying programme.

12.3 Electronic Indicator and Display

Symbol	Symbol Meaning
Water tank warning indicator	
Lint filter cleaning warning indicator	
Heat exchanger cleaning warning indicator	
Extra Dry	
Cupboard Dry	
Iron Dry	
Drying level 1	
Drying level 2	
Drying level 3	
Drying level 4	
Delay Timer	
Anti-crease 60'	60'
Anti-crease 120'	120'
Steam 3	+3
Steam 2	+2
Steam 1	+1
Delicate	
UVC	
WIFI	
Buzzer Cancel	
Start and pause	

Drying Step Display:	
Drying	
Iron dry	
Cupboard dry	
End	

The electronic display shows the drying steps throughout the program. Every time a program step starts, the relevant drying step light turns on. Once the drying step is complete, the relevant drying step light turns off.

Energy Consumption Display

The energy consumption display shows the energy consumption of the selected program. The bigger the display, the more the energy consumption. The energy consumption level increases or decreases depending on the fabric type, duration of the selected program, the drying level and the spinning speed.

13. PROGRAMME SELECTION AND CONSUMPTION TABLE

Press the Start/Pause button to start the programme. The Start/Pause LED that indicates that the programme has started and the remaining the of the program is seen on the display.

Programme	Load (kg)	Washing machine spin speed	Initial moisture content	Duration (hour:minutes)	Energy Consumption per drying cycle (kWh/cycle)
Cotton Extra Dry	12	1000	60%	6:05	3,08
Cotton Extra Dry	6	1000	60%	3:50	1,85
Eco Cotton*	12	1000	60%	5:56	3,03
Eco Cotton*	6	1000	60%	2:51	1,50
Cotton Iron Dry	12	1000	60%	4:13	2,14
Cotton Iron Dry	6	1000	60%	2:39	1,27
Synthetics Cupboard Dry	6	800	40%	2:00	1,05
Synthetics Iron Dry	6	800	40%	1:28	0,67
Delicate	2	600	50%	1:14	0,60
Wool**	-	-	50%	-	-

***Energy labelling standard programme "Commission Regulation (EU) No 2023/2533"**

All values in the table were determined in accordance with the EN 61121:2013/prAB:2024-03 standard. Consumption values may vary from the values in the table depending on the fabric type, spin speed, environemnt conditions and voltage values.

"Eco Cotton" program is the "standard cotton programme" according to Commission Regulation (EU) No 932/2012.

The Eco Cotton programme is suitable to dry wet cotton laundry, and this programme is used to assess the compliance with the EU ecodesign legislation. The Eco Cotton programme is the most efficient programme in terms of energy consumption for drying wet cotton laundry. Loading the household tumble dryer up to the maximum capacity indicated in the user manual for the respective programmes will contribute to energy savings.

**** Program lists may change depend on the model. This decleration is valid for the Wool program containing models.**

For tumble dryers supplied with direct drain hose kit (with type number containing 091V, 114V, 114S, 114R, 114P, 121V, 122V, 122S on the nameplate);

For standard tests, the water drain hose must be connected to the water drain according to the relevant installation instructions.

14. AUXILIARY FUNCTIONS

The table that summarises the options that can be selected in programmes is given below.

Option	Description
Drying Level	The humidity level obtained after drying can be increased by 3 levels. This way, level of required dryness can be selected. The levels that can be selected other than the standard setting: 1, 2, 3. After selection, the LED of the relevant drying level will turn on.
Delicate	Delicate fabrics are dried for a longer time at a low temperature
Anti-Crease	If you select the "Anti-Crease" option and do not open the door of the dryer at the end of the programme, the 1-hour anti-crease phase will extend to 2 hours. After selecting the Anti Crease option, you will hear an audible warning. You can press the same button again to cancel the option. If you open the door or press the Start/Pause key while the z-crease step is in progress, the said step will be cancelled.
Delay Start	You can delay the start time of the programme by selecting the 1-hour to 23-hour option. You can activate the desired delay time by pressing the Start/Pause button. When the time is up, the selected programme will start automatically. During the delay time, options compatible with the programme can be activated/deactivated. Long pressing on Delayed Start button changes delay time continuously.
Buzzer Cancel	The dryer emits an audible warning when the program selector knob is turned, when buttons are pressed and at the end of the program. To cancel the alerts, press and hold the "Option 1" button on the T1-T2 and T2 Touch versions and the "Option 2" button on the T3 version for 3 seconds. When you press the button, you will hear an audible warning that the option has been canceled.
Time Drying	When knob is positioned to Time Drying programme, option can be selected by pressing Time Drying option button and program starts by pressing Start/Pause button. Long pressing on tme dyring button changes time continuously.
Child Lock	There is a child lock option to avoid changes in the programme flow when keys are pressed during the programme. To activate child lock feature, user should press "1" and "2" buttons simultaneously for 3 sec. When activating/deactivating the child lock, "CL" will visualize on display for 2 sec and then becomes off; and an audible warning will be heard. Child lock is not automatically deactivated at the end of the program. To deactivate the child lock at end of the programme, set the programme selection knob to "Off" position. Then, turn on the knob to any program position and press "1" and "2" buttons simultaneously for 3 sec.
UVC*	UVC Technology developed by Vestel with the inspiration of the sun rays, ensures that your clothes and machine remain at the maximum hygiene level during the initial drying and ventilation processes.
Steam*	The steam option helps to prevent wrinkles on clothes and helps to iron clothes easily. The steam level can be adjusted in 3 levels as 1 (low), 2 (medium), 3 (high).

* The product features may change depend on the model.

15. Remote Access Settings (description of Android and ios Applications)

The VeeZy application allows you to remotely control and monitor your appliance using your smart device. In this way, you can select the appropriate program via application according to the laundry you will dry, and you can choose auxiliary options by using the additional features section. In addition, the VeeZy application helps the user to access service by notifying the user about any error that occurs on the machine.

15.1 To enable Wi-Fi:

T1

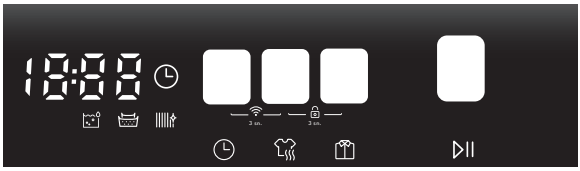

T2T / T2

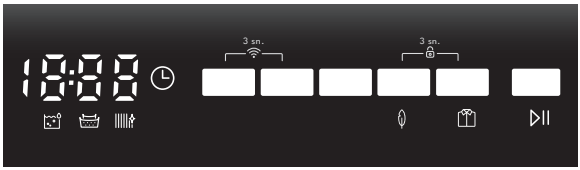

T3

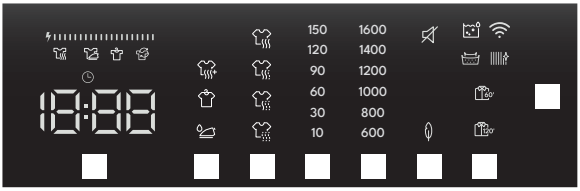

1. Delay Start and Time Drying adjustment buttons must be pressed simultaneously for 3 seconds.
2. When the Wi-Fi module is enabled, the Symbol appears on the screen for 3 seconds.
3. To connect to any Wi-Fi network and attain remote control, you can download the “VeeZy” application from Android or IOS markets to your smartphone and establish the connection with the instructions on the mobile application.

NOTE:

It is enough to introduce your machine to the Wi-Fi network once. (To connect to the Wi-Fi network, follow the instructions on the "VeeZy" application.) Before each use, you must activate the remote control by pressing the Delayed Start and Time Drying buttons simultaneously for 3 seconds. To cancel the remote control, simply press the same keys for 3 seconds simultaneously.

In case of Wi-Fi modem changes, modem name changes or Wi-Fi password changes, your machine must be re-introduced to the Wi-Fi network.

In case the activation of the remote control is skipped, only remote viewing can be performed even if any drying program is started. (no program changes can be made).

The device whose remote control is activated will switch to low energy consumption mode after a certain period of time if no operation is performed and the machine screen will turn off. Thanks to the remote control feature, the program type, drying level, anti-crease function and other additional features can be selected even after hours, and the program can be started remotely. In order for this process to be implemented, the necessary safety regulations (the machine door must not be opened or closed during the elapsed time, no power interruption must have occurred, etc.) must be met.

Switching a machine with remote control activated in child lock mode does not prevent controlling and monitoring the machine via the mobile application.

If the dryer is connected to a smart device, a different phone cannot be connected to the same appliance.

If the account you are logged into is the account you have previously added the product to, you can use your dryer directly after logging in.

After the program is started, it cannot be canceled or stopped by remote control due to security requirements.

16. Warnings Regarding Wi-Fi Mode

If you think you are experiencing any control or connection problems, perform the following. Observe if the problem persists after the operation you have performed. If you think the problem persists, take the next action.

1. Check if the product is connected to the home network.
2. Check if your smart device is connected to a network.
3. Switch the product app [VeeZy] on and off.
4. Switch the Wi-Fi mode on and off on the product. Try connecting through the application again.

If the error still persists, contact your authorized service.

16.1 Wireless LAN Features

The following table summarizes the options that can be selected in the programs.

Frequency Ranges
2.400 GHz - 2.484.GHz (CH1 to CH14)

Output Power		**TYP.**	**Criteria**	**Unit**
RF Average Output Power 802.11b CCK Mode	1M	16.5	+/- 1.5	dBm
	11M	16.5	+/- 1.5	dBm
RF Average Output Power 802.11b OFDM Mode	6M	15	+/- 1.5	dBm
	54M	13	+/- 1.5	dBm
RF Average Output Power, 802.11b OFDM Mode	MCS0	14.5	+/- 1.5	dBm
	MCS7	12	+/- 1.5	dBm

VeeZy operates in the 2.4 GHz frequency band.

***The product features may change depend on the model.**

17. STARTING THE PROGRAMME

The Start/Pause LED will flash during programme selection.Press the Start/Pause button to start the programme. The Start/Pause LED that indicates that the programme has started and the drying LED will come on.

Programme	Description	Load (kg)	Initial moisture content (%)
Cotton Extra Dry	This programme dries thick and multi-layer fabrics, such as cotton towels, bedsheets, pillowcases, bathrobes, at a high temperature to allow you to place them in a closet.	12	60%
Eco Cotton	This programme dries cotton pyjamas, underwear, tablecloths etc. to allow you to place them in a closet.	12	60%
Cotton Iron Dry	This programme dries cotton laundry to prepare it for ironing. Laundry removed from the machine will be damp.	12	60%
Synthetics Cupboard Dry	This programme dries synthetics, such as shirts, t-shirts, blouses, at a lower temperature compared to the cottons programme to allow you to place them in a closet.	6	40%
Synthetics Iron Dry	This programme dries synthetics, such as shirts, t-shirts, blouses, at a lower temperature compared to the cottons programme to prepare them for ironing. Laundry removed from the machine will be damp.	6	40%
Delicate	This programme dries thin clothes like shirts, blouses and silk garments at a low temperature to make them ready to wear.	2	50%
Time Drying	To reach the required drying level at a low temperature, you can use the time programmes. Regardless of the drying level, the programme stops at the desired time.	-	-
20 min/40 min /60 min	To reach the required drying level at a low temperature, you can use the time programmes. Regardless of the drying level, the programme stops at the desired time.	-	-
Baby Care	This programme dries delicate infant clothes at a low temperature to make them ready to wear.	3	60%
Allergy Safe*	The Allergy Safe program is used for hygienic drying of cotton laundry requiring extra hygiene, such as baby clothes, at high temperatures.	3	60%
Duvet	This programme is used to dry duvet.	2,5	60%
Jeans	This programme is used to dry jeans.	4	60%
Woolen	Use this program for gentle drying of woolen clothes, washed as stated in the washing instructions. Take out the clothes at the end of the drying cycle.	1,5	50%
Sports	Sport program is used for synthetic sport laundries like shorts, t-shirts at low temperature.	4	40%
Mix	This programme dries cotton-synthetic mixed garments that do not discolour to make them ready to wear.	4	60%
Wool Refresh	Wool refresh helps wool textiles to remove excess water after washing by applying low temperature and gentle movements of drum.	-	-

Programme	Description	Load (kg)	Initial moisture content (%)
Refresh	Without providing hot air, refresh is done by selecting Time Drying option and bad odors can be eliminated.	-	-
Express 34'/Express 45'	1 kg of cotton shirts spun at a high speed in the washing machine are dried in 34/45 minutes.	1	50%
Shirts 20'/Shirts 30'	2 to 3 shirts are ready for to be ironed in 20/30 minutes.	0,5	50%
Towels*	This programme dries thick cotton laundry such as towels, bathrobe, etc.	3	60%
Outdoor*	This programme is suitable for outdoor clothing, waterproof jackets, jackets with inner insulation, etc.	2	40%
Hygiene*	This programme is suitable for the fabrics which need hygiene requirements.	3	60%
Quick Hygiene*	Purebeam/Crystalight technology allows hygienic drying for your light cotton or synthetic clothes or clothes that require fast drying.	2	60%
Purebeam / Crystalight Baby Care*	Purebeam/Crystalight Technology provides hygienic drying for baby clothes that require extra hygiene.	3	60%
Purebeam / Crystalight Refresh**	In the Purebeam/Crystalight Refresh program, besides the purebeam/crystalight technology, your laundry is hyginecally refreshed with hot air is supplied to the drum for 60 minutes, independent of the humidity sensor.	-	-
Purebeam / Crystalight Dry*	Purebeam/Crystalight Technology provides high level of hygiene for your cotton clothes in PureBeam+ Drying program.	3	60%
Extra Silent	Silent program operates the tumble dryer by decreasing noise emitted to environment. The feeling of noise decrease almost 50% compared to Eco Cotton programme.	12	60%

IMPORTANT: Do not open the loading door while the programme is running. If you have to open the door, do not keep it open for a long time.

***The product features may change depend on the model.**

**** The hygiene of your personal belongings placed in the dryer rack** such as wallets, coins, keys and key chains is also achieved thanks to the Purebeam/Crystalight technology.**

WOOLMARK
WOOL CARE

The wool drying cycle of this machine has been tested and approved by The Woolmark Company for the drying of machine washable wool products provided that the products are washed and dried according to the instructions on the garment label and those issued by the manufacturer of this machine. M0000.The Woolmark symbol is a Certification trademark in many countries.

Model	Woolmark M Code*
7-8 kg A+ energy class	M2442
9-10 kg A+ energy class 7-8-9-10 kg A++ (with PSC motor) energy class	M2240
7-8-9-10 kg A++ (with BLDC motor) energy class 8-9-10 kg A+++ energy class	M2239

***This explanation and table is valid for Woolmark certified models. Please check your model whether "Woolmark Wool Care" logo is included on the facia pannel.**

During the Programme

If you open the door when the programme is running, the product will switch to pause mode. Once the door has been closed, press the Start/ Pause key to resume the programme.

Do not open the loading door when the programme is running. If you have to open the door, do not keep it open for a long time.

Programme End

Once the programme is over, the warning LEDs for Start/Pause, water tank level, filter cleaning and heat exchanger cleaning will turn on. Additionally, an audible warning will be given at the end of the programme. You can remove the laundry to make the machine ready for a new load.

IMPORTANT: Clean the lint filter after every programme. Empty the water tank after every programme.

IMPORTANT: If you do not take out the laundry after the programme has ended, the 1-hour Anti Crease phase will automatically be activated. This programme rotates the drum at regular intervals to prevent creases.

17.1 Drum Light Information

• The product features may change depend on the model. This information is valid for LED Drum Light included models.

• The light works automatically when you open the door. And closes itself after a while automatically.

• It is not an adjustable option for user to open or close it.

• Please do not try to replace or modify the LED Light.

18. Programs Versus Options Activation Availability Table

Steam*	UV*	Spin*	Dry Level	Drying Target*	Delicate	Child lock	Buzzer	Delay Timer	Anticrease	
√	√	√	√	√	√	√	√	√	√	Cotton Extra Dry
√	√	√	√	√	√	√	√	√	√	Eco Cotton
√	√	√	√	√	√	√	√	√	√	Cotton Iron Dry
√	√	√	√	√	√	√	√	√	√	Eco Cottons *
√	√	√	√	√	√	√	√	√	√	Synthetics Cupboard Dry
√	√	√	√	√	√	√	√	√	√	Synthetics Iron Dry
√	√	√	√	√	√	√	√	√	√	Synthetics*
√	√ T2/T2T X T3	√	X	√	√ (default)	√	√	√	√	Delicate
√	X	X	X	X	X	√	√	√	√	Time Drying
√	X	X	X	X	X	√	√	√	√	20 min /40 min/ 60 min
√	√	√	√	√	√	√	√	√	√	Mix
√	√	√	√	√	√	√	√	√	√	Baby Care
√	√	√	√	√	√	√	√	√	√	Allergy Safe*
√ T2/T2T X T3	X	X	X	X	X	√	√	√	√	Refresh
√ T2/T2T X T3	X	X	X	X	X	√	√	√	√	Wool Refresh
√	√	√	√	√	√	√	√	√	√	Jeans*
√	X	X	X	√ (default)	X	√	√	√	√	Woolen
√	√	√	√	√	√	√	√	√	√	Sports
√ T2/T2T X T3	X	X	X	√ (default)	X	√	√	√	√	Express 34'/ Express 45'
√ T2/T2T X T3	X	X	X	√ (default)	X	√	√	√	√	Shirts 20'/Shirts 30'

Steam*	UV*	Spin*	Dry Level	Drying Target*	Delicate	Child lock	Buzzer	Delay Timer	Anticrease	
√	√ T2/T2T X T3	√	X	√	√ (default)	√	√	√	√	Duvet*
√	√	√	√	√	√	√	√	√	√	Towels*
√	√	√	√	√	√	√	√	√	√	Outdoor*
√	√	√	X	√	X	√	√	√	√	Extra Silent*
√	√	√	√	√	√	√	√	√	√	Hygiene*
X	√ (default)	X	X	√ (default)	X	√	√	√	√	Quick Hygiene *
X	√ (default)	√	√	√	X	√	√	√	√	Purebeam/ Crystalight Baby Care *
X	√ (default)	X	X	X	X	√	√	√	√	Purebeam/ Crystalight Refresh *
X	√ (default)	√	√	√ (default)	X	√	√	√	√	Purebeam/ Crystalight Dry *
NO										X
YES										√
Starred features may vary depending on your machine model										*

19. CLEANING AND CARE

IMPORTANT: Do not use industrial chemicals to clean your dryer. Do not use a dryer that has been cleaned with industrial chemicals.

19.1 Cleaning the Lint Filters

IMPORTANT: DO NOT FORGET TO CLEAN THE LINT FILTERS AFTER EACH USE.

To clean the lint filters:

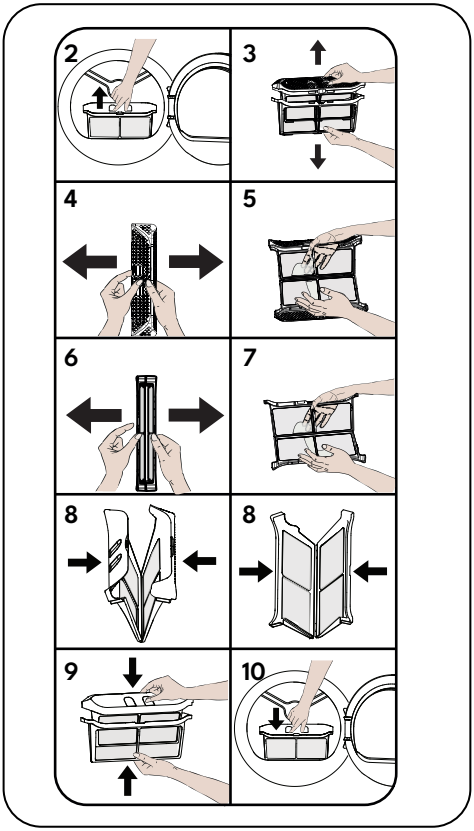

1. Open the loading door.
2. Pull up the lint filters to remove it.
3. Remove the inner filter from the outer filter.
4. Open the inner filter.
5. Clean the inner filter by your hands or using a soft cloth.
6. Open the outer filter
7. Clean the outer filter by your hands or using a soft cloth.
8. Close the filters and fit the hooks.
9. Place inner filter inside of outer filter.
10. Refit the Lint filter.

After the dryer has been used for a certain period of time, if you encounter a layer that will cause obstruction on the filter surface, clean the layer. The lint should be thrown in the garbage bin and should not be washed through the drain in order to avoid spreading microplastics in the used water system.

19.2 Emptying the Water Tank

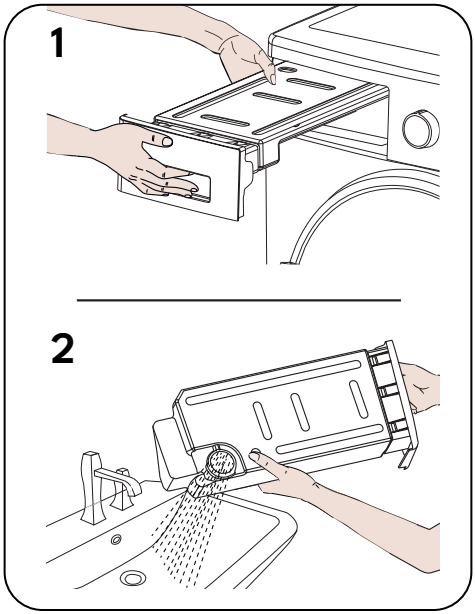

1. Pull the drawer cover and carefully take out the tank.
2. Empty the water in the tank.
3. Refit the water tank.

IMPORTANT: Never remove the water tank when the programme is running. The water condensed in the water tank is not suitable for human consumption.

IMPORTANT: DO NOT FORGET TO EMPTY THE WATER TANK AFTER EACH USE.

"For tumble dryers supplied with direct drain hose kit (with type number containing 091V, 114V, 114S, 114R, 114P, 121V, 122V, 122S on the nameplate);

If the water tank fills up during the running of the program, the warning button lights up and the machine switches to standby mode. In this case, you need to empty the water tank and press the Start/Stop" button to resume the program.

When the water tank is emptied, the warning indicator will go off and the program will resume. During cycling, it is recommended to use a direct drain hose to avoid this warning.

19.3 Cleaning the Heat Exchanger

IMPORTANT: Clean the heat exchanger when you see the warning "Heat Exchanger cleaning".

IMPORTANT: Even if the "heat exchanger cleaning warning led" is not on, the exchanger can be cleaned more frequently according to the usage behaviours.

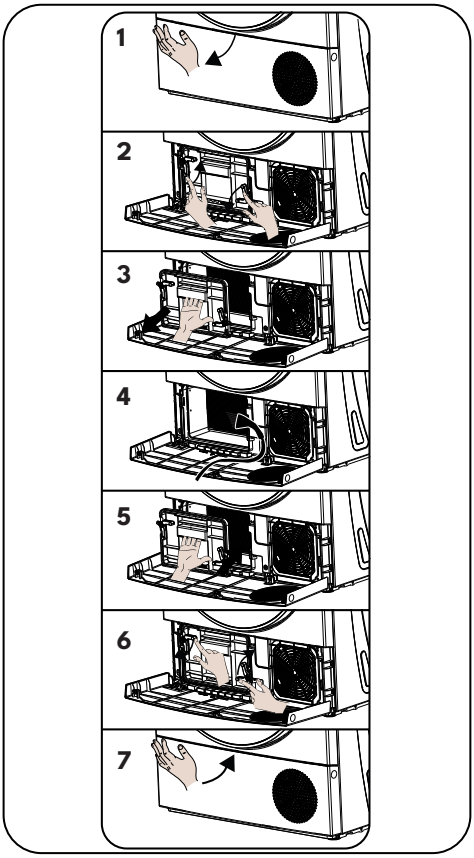

If the drying process is completed, open the loading door and wait for it to cool down.

1. Open the kick plate cover as shown.
2. Unlock the exchanger cover by turning in the direction shown with arrows.
3. Take out the exchanger cover as shown.
4. Clean the front surface of the exchanger when it is dry as shown with the help of a vacuum cleaner.
5. Fit the exchanger cover as shown.
6. Lock the exchanger cover by turning in the direction shown with arrows.
7. Close the kick plate cover as shown.

WARNING: DO NOT CLEAN WITH BARE HANDS SINCE THE EXCHANGER FINS ARE SHARP. THEY MAY HURT YOUR HANDS

19.4 Cleaning the Humidity Sensor

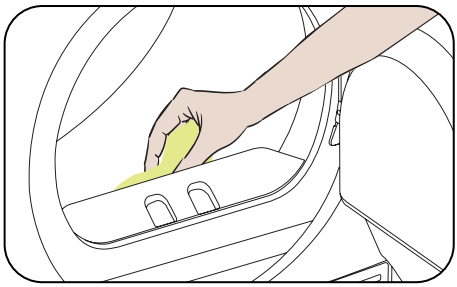

Inside the machine, there are humidity sensors that detect whether the laundry is dry or not.

To clean the sensors:

1. Open the loading door of the machine.
2. If the machine is still hot due to the drying process, wait for it to cool down.
3. Using a soft cloth soaked in vinegar, wipe the metal surfaces of the sensor and dry them.

IMPORTANT: CLEAN THE METAL SURFACES OF THE SENSOR 4 TIMES A YEAR.

IMPORTANT: Do not use metal tools to clean the metal surfaces of the sensor.

WARNING: Due to the risk or fire and explosion, do not use solution agents, cleaning agents or similar products when cleaning the sensors.

19.5 Cleaning the Inner Surface of the Loading Door

IMPORTANT: Do not forget to clean the inner surface of the loading door after each drying process.

Open the loading door of the dryer and clean all of the inner surfaces and the gasket with a soft, damp cloth.

20. MACHINE SOUND

SOURCE OF SOUND	DEFINITION
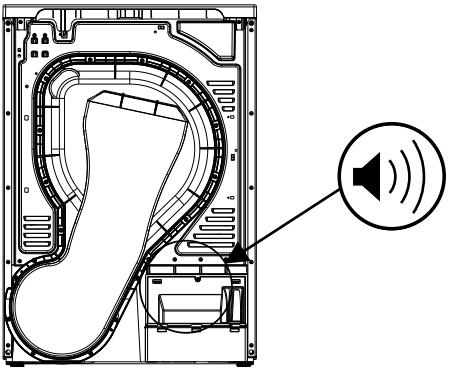	**Pump Sound** Pump is activated when the machine starts to work and during the operation at certain intervals. It is normal to hear pump and water sound during this process.
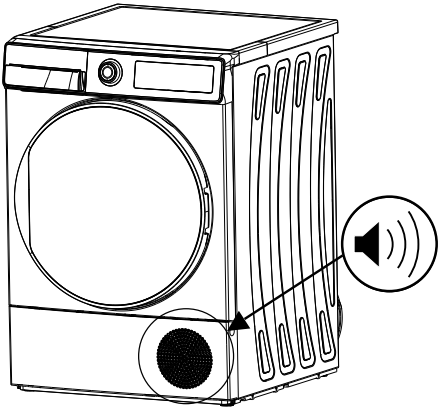	**Compressor Sound** It is normal to hear a metallic sound from the compressor from time to time while the machine is running.

21. TECHNICAL SPECIFICATIONS

Brand	SHARP
Model name	KD-NHL2S9GWE-EN
Height	Min: 845 mm / Max: 855 mm*
Width	596 mm
Depth	639 mm
Capacity (max.)	12 kg**
Voltage	220-240 V
Power	1000 W

*Min. height: Height with the adjustable feet not used. Max. height: Height with the adjustable feet extended to the maximum.

**Dry laundry weight before washing.

IMPORTANT: To improve the quality of the dryer, technical specifications are subject to change without prior notice.

IMPORTANT: The values declared have been obtained in a laboratory environment according to the relevant standards. These values may change depending on the environmental conditions and use of the dryer.

ATTENTION:

1. Due to safety reasons, legislation forces a room of at least 1 m^3 per 8 g refrigerant for such equipment. See the refrigerant amount product contains on the rating label that is located on front panel to determine the minimum allowed room sizes.
2. Coolant :Risk of fire/risk of poisoning/risk of material damage and damage to the appliance. The appliance contains refrigerant which, although it is environmentally friendly, is flammable R290. Failure to dispose of it properly may result in a fire or poisoning. Dispose of the appliance properly and do not damage the pipes in the refrigerant circuit.

- Type of refrigerant : R290
- ODP (Ozone Depletion Potential) : 0
- GWP (Global Warning Potential) : 3

3. Risk of explosion or fire. Remove any cigarette lighters and matches from pockets.
4. Do not place the dryer near open fires and ignition sources.

22. TROUBLESHOOTING

Your dryer is fitted with systems that continuously perform checks during the drying process to take the necessary measures and warn you in case of any malfunction.

⚠ **WARNING:** If the problem persists even if you have applied the steps in this section, please contact the your dealer or an Authorised Service Provider. Never try to repair a nonfunctional product.

PROBLEM	REASON	SOLUTION
The drying process takes a long time.	The surface of the lint filter might be clogged.	Wash the filter with lukewarm water.
	The heat exchanger might be clogged.	Clean the heat exchanger
	The ventilation grills in front of the machine might be closed.	Open the doors/windows to prevent the room temperature from rising too much.
	There might be a layer of limescale on the humidity sensor.	Clean the humidity sensor.
	The dryer might be overloaded with laundry.	Do not overload the dryer.
	The laundry might be insufficiently spun.	Select a higher spin speed on your washing machine.
Laundry comes out damp at the end of the drying process.	⚠ The laundry that comes out hot at the end of the drying process generally feels more humid.	
	The programme used might not be suitable for the type of laundry.	Check the care labels on the laundry items, select a suitable programme for the type of laundry and additionally, use the time programmes.
	The surface of the lint filter might be clogged.	Wash the filter with lukewarm water.
	The heat exchanger might be clogged.	Clean the heat exchanger
	The dryer might be overloaded with laundry.	Do not overload the dryer.
	The laundry might be insufficiently spun.	Select a higher spin speed on your washing machine.
The dryer cannot be opened or the programme cannot be started. The dryer does not get activated when adjusted.	The dryer might not be plugged in.	Make sure that the plug is fitted in the socket.
	The loading door might be open.	Make sure that the loading door is properly closed.
	You might not have set a programme or pressed the Start/Pause key.	Make sure that the programme has been set and the dryer is not in the Standby (Pause) mode.
	Child lock might be active.	Deactivate the child lock.

The programme has been interrupted for no reason.	The loading door might not be closed properly.	Make sure that the loading door is properly closed.
	There might have been a power failure.	Press the Start/Pause key to start the programme.
	The water tank might be full.	Empty the water tank.
Clothes have shrunk, felted or deteriorated.	The programme used might not be suitable for the type of laundry.	Check the care labels on the laundry items, select a suitable programme for the type of laundry.
Water leaking from the loading door.	There might be lint accumulated on the inner surfaces of the loading door and on the surfaces of the gasket of the loading door.	Clean the inner surfaces of the loading door and the surfaces of the gasket of the loading door.
The loading door opens on its own.	The loading door might not be closed properly.	Push the loading door until you hear the closing sound.
The water tank warning symbol is on/flashing.	The water tank might be full.	Empty the water tank.
	The water discharge hose might be bent.	If the product is connected directly to the water outlet, check the water discharge hose.
The heat exchanger cleaning warning symbol is on.	The heat exchanger might be unclean.	Clean the heat exchanger.
The filter cleaning warning symbol is on.	The lint filter might be unclean.	Clean the filter.
	The filter seat might be clogged by lint.	Clean the filter seat.
	There might be a layer that causes obstruction on the surface of the lint filter.	Wash the filter with lukewarm water.
The filter and heat exchanger cleaning warning symbol are flashing.	The filter seat might be clogged by lint.	Clean the filter seat.
	There might be a layer that causes obstruction on the surface of the lint filter.	Wash the filter with lukewarm water.
	The heat exchanger might be clogged.	Clean the heat exchanger.
The program can not be started and the filter warning led is blinking.	The filter may not be placed.	Replace the filter.
	The filter warning led is blinking even though the filter is placed.	Call technical service.
The drying process ends within 20 minutes.	If there is no laundry in the drum or the laundry is dry, "empty drum detection" feature is activated. The drying program ends within 20 minutes and goes to normal "End" mode.	Check the drum and the wetness of laundry items.
	If the laundry items are still wet, there may be failure in humidity sensor.	Call technical service.

23. AUTOMATIC FAULT WARNINGS AND WHAT TO DO

Your tumble dryer is equipped with a built-in fault detection system, indicated by a combination of flashing operation lights. The most common failure codes are shown below.

ERROR CODE	ERROR	SOLUTION
E00	User Interface error	Contact the nearest authorised service agent.
E03/	Aquaswtich/pump error	Empty the water tank, if problem does not solved, Contact the nearest authorised service agent.
E04	Compressor malfunction	Contact the nearest authorised service agent.
E05	Compressor NTC error	Contact the nearest authorised service agent.
E06	Door NTC error	Contact the nearest authorised service agent.
E07	Motor error	Contact the nearest authorised service agent.
E08	Voltage fluctuation error	There may be voltage fluctuation in mains. Contact the nearest athuorised service agent.

24. ENVIRONMENTAL PROTECTION AND PACKAGING INFORMATION

24.1 Packaging Information

The packaging of this product is made of recyclable materials. Do not dispose of the packaging, waste together with household or other waste. Instead, take it to a packaging collection point defined by your local authority.

24.2 Technical Data

The technical information is situated in the rating plate on the internal side of the appliance and on the energy label. The QR code on the energy label supplied with the appliance provides a web link to the information related to the performance of the appliance in the EU EPREL database.

Keep the energy label for reference together with the user manual and all other documents provided with this appliance. It is also possible to find the same information in EPREL using the link https://eprel.ec.europa.eu and the model name and product number that you find on the rating plate of the appliance. See the link www.theenergylabel.eu for detailed information about the energy label.

24.3 Energy Efficiency

- You should operate the dryer to full capacity, but make sure that it is not overloaded. Loading up the dryer to its full capacity will contribute to energy savings.
- When the laundry is being washed, the spin speed should be at the highest level possible. This will shorten the drying time and reduce energy consumption.
- Make sure that the same kinds of laundry are dried together.
- Please follow the recommendations in the user manual for programme selection.
- For air circulation, leave an appropriate clearance on the front and back sides of the dryer. Do not cover the grills on the front side of the machine.
- Unless necessary, do not open the door of the machine when drying. If you have to open it, do not keep it open for a long time.
- Do not add new (wet) laundry during the drying process.
- Hairs and lint that detach from the laundry and merge in the air are collected by the "Lint Filters". Please make sure that the filters are cleaned before and after each use.
- For models with a heat pump, make sure that the heat exchanger is cleaned at least once a month or more frequently according to user behaviour.
- During the drying process, the environment where the dryer is installed must be well ventilated.

25. CUSTOMER CARE AND SERVICE

Always use original spare parts. When contacting our Authorised Service Centre, ensure that you have the following data available: Model, Serial Number and Service Index. The information can be found on the rating plate. The original spare parts for some specific components are available for 10 years, based on the type of component, from the placing on the market of the last unit of the model.

The website to access professional repair services:

https://www.sharphome.eu

Service & Support

Visit Our Website

www.sharphome.eu

UK Technical Support - Large Appliances

helpdesk.IE@sharphomeappliances.com

0333 5777230

Republic Of Ireland Technical Support– Large Appliances

helpdesk.IE@sharphomeappliances.com

03335 777230

VESTEL Holland B.V. UK Branch, 1 Waterside Drive, Langley, Berkshire. SL3 6EZ
VESTEL Holland B.V. Stationsplein 45, A2.191 3013 AK Rotterdam, The Netherlands.

SHARP
Be Original.

52558927-250313-00