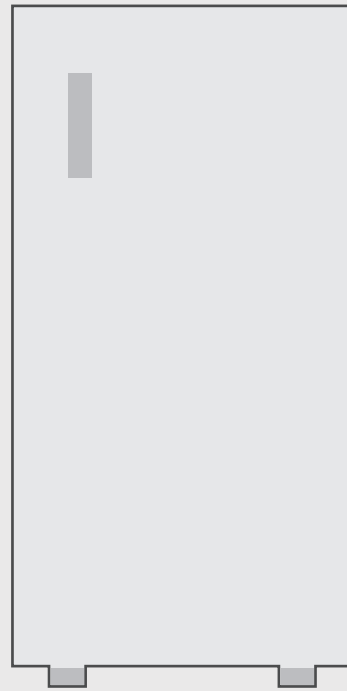

Upright Freezer

SINGLE DOOR SERIES

USER MANUAL

MDRU333FZE01

Warning notices: Before using this product, please read this manual carefully and keep it for future reference.
The design and specifications are subject to change without prior notice for product improvement.
Consult with your dealer or manufacturer for details.
The diagram above is just for reference. Please take the appearance of the actual product as the standard.

THANK YOU LETTER

Thank you for choosing Midea! Before using your new Midea product, please read this manual thoroughly to ensure that you know how to operate the features and functions that your new appliance offers in a safe way.

EN

CONTENTS

THANK YOU LETTER ---------- 01

SPECIFICATIONS ---------- 02

PRODUCT OVERVIEW ---------- 03

PRODUCT INSTALLATION ---------- 04

OPERATION INSTRUCTIONS ---------- 12

CLEANING AND MAINTENANCE ---------- 16

TROUBLESHOOTING ---------- 18

APPENDIX ---------- 20

SPECIFICATIONS

Product model	MDRU333FZE01
Fresh Food Storage Compartment Volume	/
Frozen Food Storage Volume	238L
Defrosting Type	Auto-defrost
Temperature Rise Time	8h
Freezing Capacity	11.1kg/24h
Rated Voltage	220-240V~
Rated Current	0.6A
Overall Dimension (H x W x D)	1722x595x632mm

EN

PRODUCT OVERVIEW

EN

Names of components

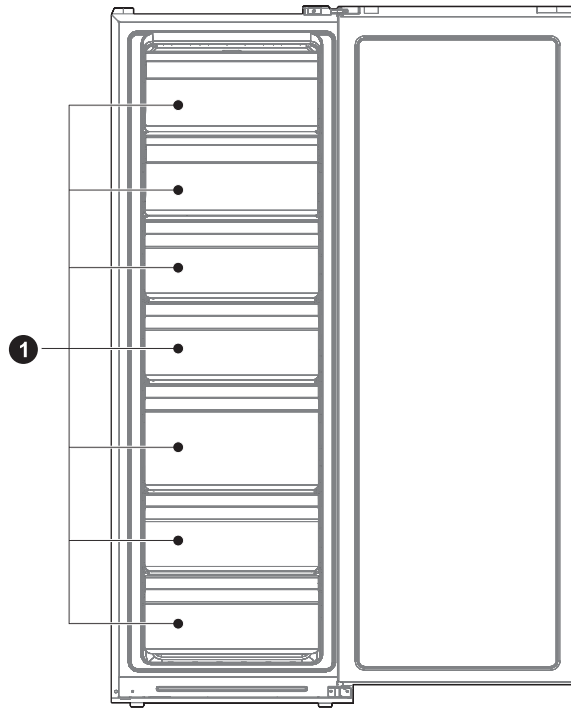

1 Drawer

ATTENTION

The picture above is only for reference. The actual configuration will depend on the physical product or statement by the distributor.

PRODUCT INSTALLATION

Install Instruction

For refrigerating appliances with climate class

- Depending on the climate class, This refrigerating appliance is intended to be used at ambient temperatures range as specified following table.
- The climate class can be found on the rating plate. The product may not operate properly at temperatures outside of the specific range.
- You can find the climate class on the product label.

EN

Effective temperature range

- The product is designed to operate normally in the temperature range specified by its class rating.

Class	Symbol	Ambient temperature range °C	
		IEC 62552 (ISO 15502)	ISO 8561
Extended temperate	SN	+ 10 to + 32	+ 10 to + 32
Temperate	N	+ 16 to + 32	+ 16 to + 32
Subtropical	ST	+ 16 to + 38	+ 18 to + 38
Tropical	T	+ 16 to + 43	+ 18 to + 43

Dimensions and Clearances

- Too small of a distance from adjacent items may result in the degradation of freezing capability and increased electricity costs. Allow over 100 mm of clearance from each adjacent wall when installing the appliance.

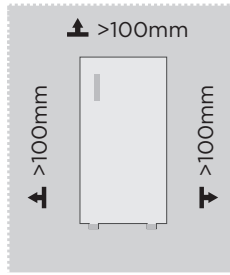

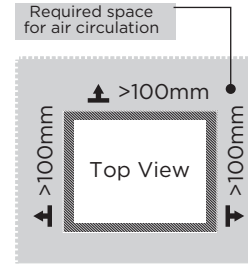

ATTENTION

The picture above is only for reference. The actual configuration will depend on the physical product or statement by the distributor.

EN

Space requirement diagram (when the door is open and when the door is closed)

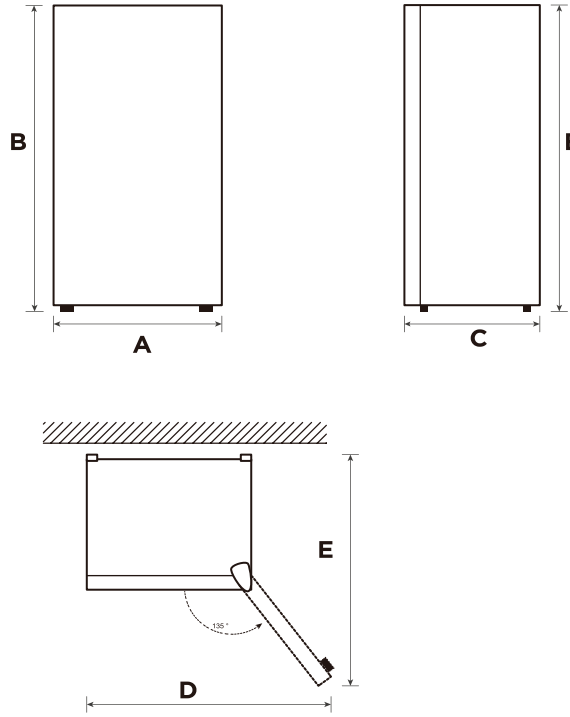

Width	Overall Height	Depth	Width doors open 135°	Depth doors open 135°
A	B	C	D	E
595	1722	632	1015	1042

Notice: All dimensions in mm

Door handle installation

List of tools to be provided by the user



Cross screwdriver

EN

Step

1. Remove the screw hole caps 1 from the door, and use cross screwdriver to fix screw 3 into the screw hole 2 tightly.
2. Assemble the screw hole caps 4 on the screw hole of handle.
3. The reverse operation is of disassembly.

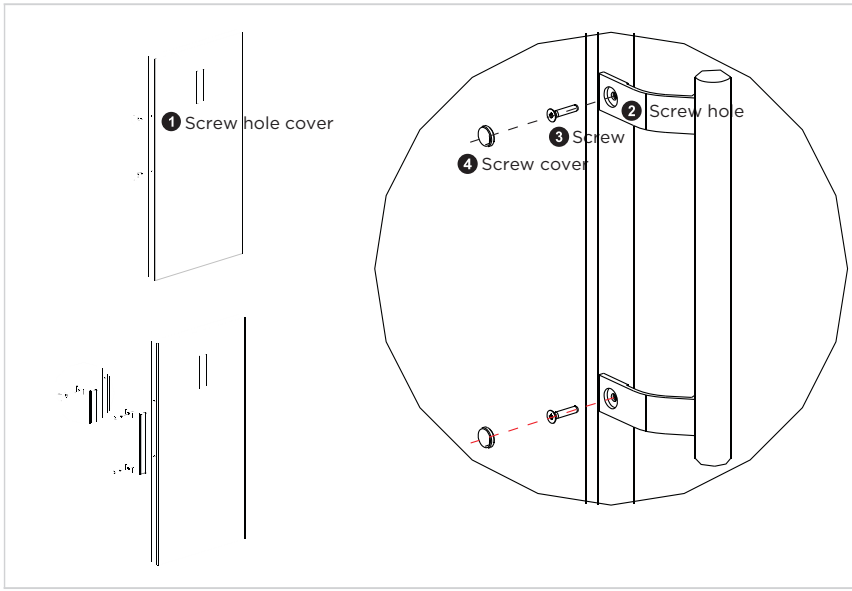

ATTENTION

The picture above is only for reference. The actual configuration will depend on the physical product or statement by the distributor.
Precautions shall be taken to prevent fall of the handle from causing any personal injury.

Door right-left change (optional)

Based on the location where you plan to use your refrigerator, you may find it more convenient to reverse the position of the door.

⚠ CAUTION

CAUTION: To avoid injury to yourself or your property, we recommend that someone assist you during the door reversal process.

EN

Preparing to reverse the door position

You will need: A standard screwdriver, a Phillips screwdriver, and the included Allen wrench.

- Make sure that your refrigerator is unplugged and empty.
- Have someone available to assist you in the process.
- Keep all of the parts you remove to reuse them later.

Tools needed for changing the door:



Cross screwdriver

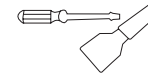

Putty knife
thin-blade screwdriver



5/16” socket and ratchet



Masking tape

Parts to be used for door reverse			
SN	parts	Quantity	Notes
1	Shaft sleave	1	Pre-installed on the refrigerator and to be used when changing the door
2	Upper hinge screw	1	Pre-installed on the refrigerator and to be used when changing the door
3	Right stopper	1	Pre-installed on the refrigerator, removed when the door is reversed, and kept for future use
4	Hinge cover assembly	1	Pre-installed on the refrigerator, removed when the door is reversed, and kept for future use
5	Pillar switch	1	Pre-installed on the refrigerator and to be used when changing the door
6	Left hinge cover	1	Pre-installed on the refrigerator, removed when the door is reversed, and kept for future use
7	Right upper hinge	1	Pre-installed on the refrigerator, removed when the door is reversed, and kept for future use
8	Adjustable foot	1	Pre-installed on the refrigerator and to be used when changing the door
9	Adjustable foot	3	Left upper hinge/Left upper hinge cover/Le ftstopper
10	Lower hinge assembly	1	Pre-installed on the refrigerator and to be used when changing the door
11	Lower hinge screw	2	Pre-installed on the refrigerator and to be used when changing the door
12	End cover plate	1	Pre-installed on the refrigerator and to be used when changing the door
13	End cover plate	1	In the attached plastic bag, take them out for use when door is reversed

Step

1. Power off the refrigerator, and remove all objects from door trays.
2. Dismantle the screw hole caps, screw and handle, and remove the plastic screw hole caps from the other side .please refer to chapter “Door handle installation”.
3. Dismantle the upper hinge cover, screws and upper hinge , and remove the hole cover from the other side. Unplug the wiring connector on the right side of refrigerator top (1,2,3 wiring connector).
4. Dismantle the door and right bottom hinge assembly (hinge shaft&adjustable foot&hinge),disassemble the right bottom hinge assembly, and assemble the hinge shaft and adjustable foot on the other side of hinge, then assemble the whole hinge assembly on the other side of refrigerator.

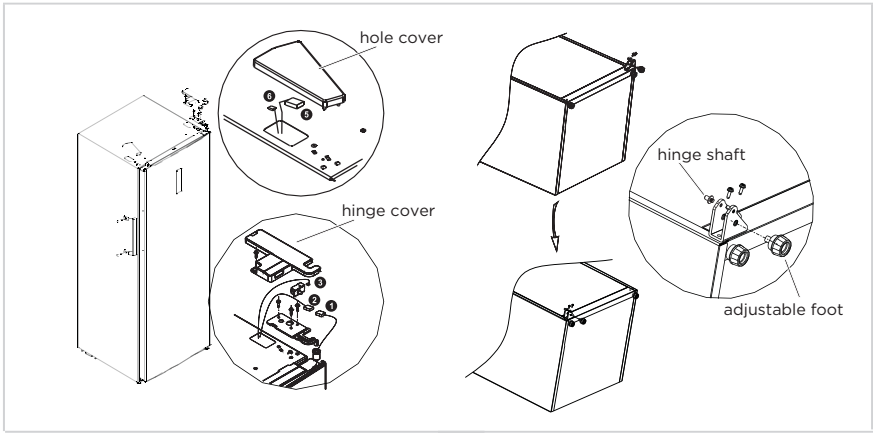

5. Remove the door upper cover, install the upper hinge sleeve, door signal line to the other side and install the door upper cover.
6. Dismantle the right door stopper , sleeve pipe from the bottom of door, insert the sleeve pipe into hinge hole of left bottom of door,and take out left door stopper from the accessory bag, and assemble it on left bottom of door,the right stopper could be reserved for future use.

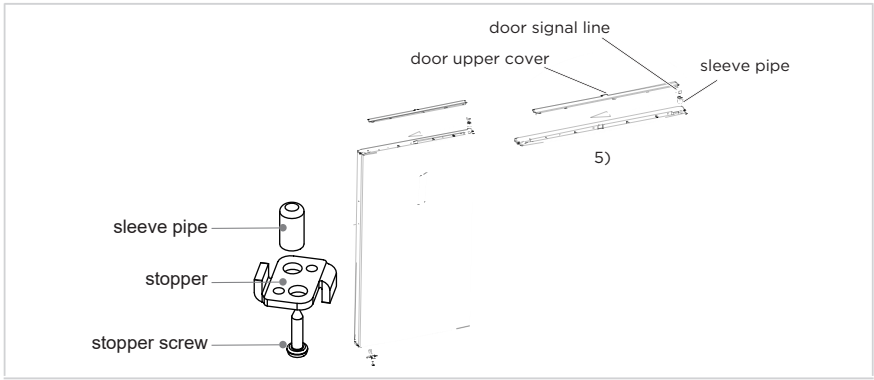

EN

7. Take out of the left top hinge,left top hinge cover from accessories package;
   Place the door on bottom hinge ,and mount left top hinge.
   Dismantle the pillar switch from the hinge cover assembly ,and palce on the left upper hinge cover;
   Connect signal line terminal 5 with signal line terminal 1,connect signal line terminal 6 to the door switch;
   Mount top hinge cover and hole cover.

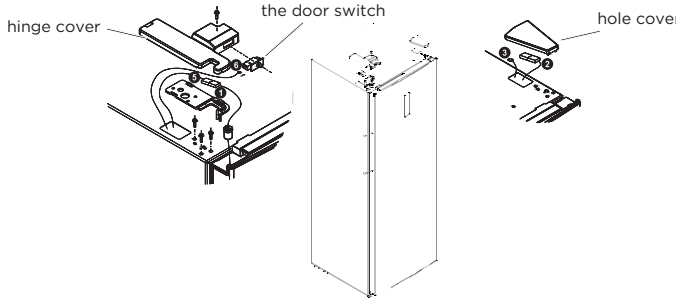

8. For the assembly of handle ,please refer to chapter “Door handle installation”.

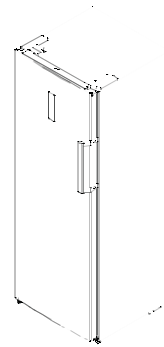

ATTENTION

The picture above is only for reference. The actual con guration will depend on the physical product or statement by the distributor.

Placement

- Before use, remove all packing materials, including bottom cushions, foam pads and tapes inside of the refrigerator; tear off the protective film on the doors and the refrigerator body.
- Keep away from heat and avoid direct sunlight. Do not place the freezer in moist or watery places to prevent rust or reduction of insulating effect.
- Do not spray or wash the refrigerator; do not put the refrigerator in moist places easy to be splashed with water so as not to affect the electrical insulation properties of the refrigerator.
- The refrigerator is placed in a well-ventilated indoor place; the ground shall be flat, and sturdy (rotate left or right to adjust the wheel for leveling if unstable).

EN

Leveling feet

To avoid vibration, the unit must be leveled.

If required, adjust the leveling screws to compensate for the uneven floor.

The front should be slightly higher than the rear to aid in door closing.

Leveling screws can be turned easily by tipping the cabinet slightly.

Turn the leveling screws counterclockwise to raise the unit, clockwise to lower it.

Moving the appliance

1. Remove all food from inside the appliance.
2. Pull the power plug out, insert and fix it into the power plug hook at the rear or on top of the appliance.
3. Tape parts such as shelves and the door handle to prevent from falling off while moving the appliance.
4. Move the appliance with more than two people carefully. When transporting the appliance over a long distance, keep the appliance upright.
5. After installing the appliance, connect the power plug into a socket out to switch on the appliance.

ATTENTION

Precautions before operation:
Before making changes the refrigerator must be disconnected from power. precautions should be taken to prevent any personal injury.

Connecting the appliance

- After transportation, please let the product stay for more than 2 hours before turning on the power, otherwise it will lead to a decrease in cooling capacity or a damage to the product.
- Before putting any fresh or frozen foods, the refrigerator shall have run for 2-3 hours, or for above 4 hours in summer when the ambient temperature is high.
- Please pull out the plug in case of power failure or cleaning. Do not connect the freezer to power supply within five minutes to prevent damages to the compressor due to successive starts.

EN

Tips for energy saving

- The appliance should be located in the coolest area of the room, away from heat producing appliances or heating ducts, and out of the direct sunlight.
- Let hot foods cool to room temperature before placing in the appliance. Overloading the appliance forces the compressor to run longer. Foods that freeze too slowly may lose quality, or spoil.
- Be sure to wrap foods properly, and wipe containers dry before placing them in the appliance. This cuts down on frost build-up inside the appliance.
- Appliance storage bin should not be lined with aluminum foil, wax paper, or paper toweling. Liners interfere with cold air circulation, making the appliance less efficient.
- Organize and label food to reduce door openings and extended searches. Remove as many items as needed at one time, and close the door as soon as possible.

OPERATION INSTRUCTIONS

EN

Control panal

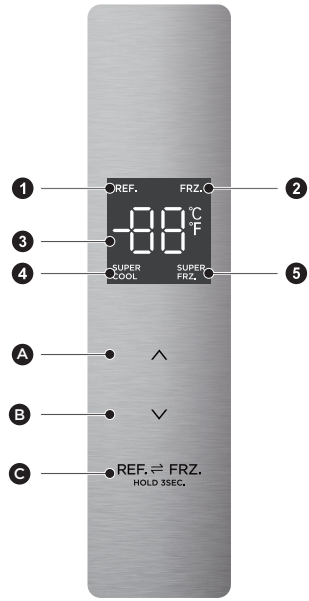

ATTENTION

The picture above is only for reference. The actual configuration will depend on the physical product or statement by the distributor.

Display		Key	
1	Refrigerating icon	A	Temperature up button
2	Freezer icon	B	Temperature down button
3	Temperature display icon	C	Temperature zone selection
4	Super cool icon		
5	Super freezing icon		

EN

1. When power on the refridgerator for the 1st time, the whole dispaly panel will shine for 3 seconds. Then the dispaly panel enters the normal display. The first time for using the refridgerator, the default set temperatures is -20°C.
2. When the error occurs, the display panel shows the error code. Otherwise, the display panel shows the set temperature.
3. Generally, the setting data will take effect after 30s without door opening action or key operation, and the display panel will go out after 30s. When the display panel is not lit, the display panel will normally light up if there is a key operation. The display panel will light up in case of error with “visible error code”, then the display panel will go out after 30s.
4. Fridge/Freezer conversion:
   Press the botton REF. ⇄ FRZ. HOLD 3SEC. for 3 seconds to achieve Fridge/Freezer conversion.
5. Press the temperature up button “Λ” can adjust the temperature, each click of the temperature up button “Λ”, the set temperature will be rised 1°C; Press the temperature down button “V” can adjust the temperature,each click of the temperature down button “V”, the set temperature will be reduced 1°C; The temperature setting range of refrigerating chamber is 2-8° C. When the temperature is adjusted to the boundary value, the refrigerator will sound an alarm if the temperature up button “Λ” or the temperature up button “V” still have been pressed.
6. Press the temperature up button “Λ” can adjust the temperature,each click of the temperature up button “Λ” , the set temperature will be rised 1°C; Press the temperature down button “V” can adjust the temperature, each click of the temperature down button “V”, the set temperature will be reduced 1°C; The temperature setting range of freezing chamber is -16--24°C. When the temperature is adjusted to the boundary value, the refrigerator will sound an alarm if the temperature up button “Λ” or the temperature up button “V” still have been pressed.
7. Set the Super cooling mode:
   After the temperature of the refrigeration room is adjusted to 2°C, press the temperature down button “V” to enter the super cooling mode. In the super cooling mode, the temperature of the refrigerating chamber is automatically set to 2°C.
8. Exit the Super cooling mode:
   Press the temperature up button “Λ” to exit the super cooling mode or automatically exit the super cooling mode after 6h. After exiting the super cooling mode, the temperature of the refrigerator will automatically return to the temperature set before the super cooling mode.
9. Exit the Super cooling mode:
   Press the temperature up button “Λ” to exit the super cooling mode or automatically exit the super cooling mode after 6h. After exiting the super cooling mode, the temperature of the refrigerator will automatically return to the temperature set before the super cooling mode.
10. Exit the super freezing mode:
    Press the temperature up button “Λ” to exit the super freezing mode or automatically exit the super freezing mode after 24h. After exiting the super freezing mode, the freezing chamber temperature will automatically return to the temperature set before the super freezing mode.

11. Opening alarm control:
    If the door is not closed in two minutes, the buzzer will sound untill the door is closed. Press any one button to stop the buzzer alarm.
12. Fault indication:
    The following warnings appearing on the dispaly indicate corresponding faults of the refrigerator. The user shall contact a maintenance specialist for maintenance, so as to ensure optimized operation of the appliance.

Fault Code	Fault Description
E2	Temperature sensor failure of Refrigerating / freezing chamber
E5	Deforst sensor detection circuit error
E6	Communication error
E7	Ambient temperature sensor error

ATTENTION

Note: The quick-freezing function is designed to maintain the nutritional value of the food in the freezer. It can freeze the food in the shortest time. If a large amount of food is frozen at one time, it is recommended that the user turn on the quick-freezing function and put the food in. At this time, the freezing speed of the freezer compartment is increased, which can quickly freeze the food, effectively lock the nutrition of the food, and facilitate storage.

Refrigerating

- The Refrigerating Chamber is suitable for storage of a variety of fruits, vegetables, beverages and other food consumed in the short term, suggested storage time 3days to 5days.
- Cooking foods shall not be put in the refrigerating chamber until cooled to room temperature.
- Foods are recommended to be sealed up before putting into the refrigerator.

Freezing

- he freezer may keep food fresh for a long time and it is mainly used to store frozen foods and making ice.
- The freezing chamber is suitable for storage of meat, fish, rice balls and other foods not to be consumed in short time.
- Chunks of meat are preferably to be divided into small pieces for quick freezing and easy access. Please be noted food shall be consumed within the shelf time.
- The appliance has the function of refrigerator-freezer transition, by operating on display panel, end- consumers could select refrigerator or freezer in accordance with their requirement.

ATTENTION

Note: Storage of too much food during operation after the initial connection to power may adversely affect the freezing effect of the refrigerator.

EN

Order	Compartments TYPE	Target storage temp. [°C]	Appropriate food
1	Fridge	+2 ~ +8	Eggs, cooked food, packaged food, fruits and vegetables, dairy products, cakes, drinks and other foods are not suitable for freezing.
2	(***)*-Freezer	≤-18	Seafood (fish, shrimp, shellfish), freshwater aquatic products and meat products (recommended for 3 months, the longer the storage time, the worse the taste and nutrition), suitable for frozen fresh food.
3	***-Freezer	≤-18	Seafood (fish, shrimp, shellfish), freshwater aquatic products and meat products (recommended for 3 months, the longer the storage time, the worse the taste and nutrition), suitable for frozen fresh food.
4	**-Freezer	≤-12	Seafood (fish, shrimp, shellfish), freshwater aquatic products and meat products (recommended for 3 months, the longer the storage time, the worse the taste and nutrition), suitable for frozen fresh food.
5	*-Freezer	≤-6	Seafood (fish, shrimp, shellfish), freshwater aquatic products and meat products (recommended for 3 months, the longer the storage time, the worse the taste and nutrition), suitable for frozen fresh food.
6	0-star	-6 ~ 0	Fresh pork, beef, fish, chicken, some packaged processed foods, etc. (Recommended to eat within the same day, preferably no more than 3 days). Partially encapsulated processed foods (non-freezable foods).
7	Chill	-2 ~ +3	Fresh/ frozen pork, beef, chicken, freshwater aquatic products, etc. (7 days below 0°C and above 0°C is recommended for consumption within that day, preferably no more than 2 days).Seafood (less than 0 for 15 days, it is not recommended to store above 0°C.
8	Fresh food	0 ~ +4	Fresh pork, beef, fish, chicken, cooked food, etc. (Recommended to eat within the same day, preferably no more than 3 days)
9	Wine	+5 ~ +20	Red wine, white wine, sparkling wine, etc.

ATTENTION

please store different foods according to the compartments or target storage temperature of your purchased.

CLEANING AND MAINTENANCE

EN

Overall cleaning

- Dusts behind the refrigerator and on the ground shall be timely cleaned to improve the cooling effect and energy saving.
- Check the door gasket regularly to make sure there are no debris. Clean the door gasket with a soft cloth dampened with soapy water or diluted detergent.
- The interior of the refrigerator should be cleaned regularly to avoid odor.
- Please turn off the power before cleaning interior, remove all foods, drinks, shelves, drawers, etc.
- Use a soft cloth or sponge to clean the inside of the refrigerator, with two tablespoons of baking soda and a quart of warm water. Then rinse with water and wipe clean. After cleaning, open the door and let it dry naturally before turning on the power.
- For areas that are difficult to clean in the refrigerator (such as narrow sandwiches, gaps or corners), it is recommended to wipe them regularly with a soft rag, soft brush, etc. and when necessary, combined with some auxiliary tools (such as thin sticks) to ensure no contaminants or bacterials accumulation in these areas.
- Do not use soap, detergent, scrub powder, spray cleaner, etc., as these may cause odors in the interior of the refrigerator or contaminated food.
- Clean the bottle frame, shelves and drawers with a soft cloth dampened with soapy water or diluted detergent. Dry with a soft cloth or dry naturally.
- Wipe the outer surface of the refrigerator with a soft cloth dampened with soapy water, detergent, etc., and then wipe dry.
- Do not use hard brushes, clean steel balls, wire brushes, abrasives (such as toothpastes), organic solvents (such as alcohol, acetone, banana oil, etc.), boiling water, acid or alkaline items, which may damage the fridge surface and interior. Boiling water and organic solvents such as benzene may deform or damage plastic parts.
- Do not rinse directly with water or other liquids during cleaning to avoid short circuits or affect electrical insulation after immersion.

ATTENTION

Please unplug the refrigerator for defrost and cleaning.

Cleaning of door tray

- According to the direction arrow in the figure below, use both hands to squeeze the tray, and push it upward, then you can take it out.
- After washing the tray having been taken out, you can adjust its installing height in accordance with your requirement.

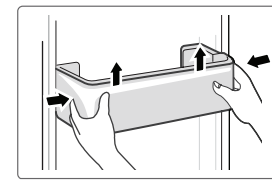

Cleaning of glass shelf

- As the innermost part of the refrigerator liner where contacting the shelves has a backstop, you shall raise the shelves upward, then you can be able to take it out.
- Adjust or clean the shelves according to your requirement.

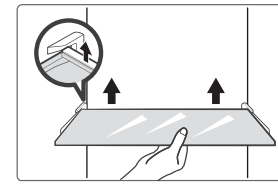

EN

Cleaning the vegetable drawer

1. Remove the contents of the drawer. Hold the handle of the vegetable drawer and pull it out completely until it stops.
2. Lift the vegetable drawer up and remove it by pulling it out.

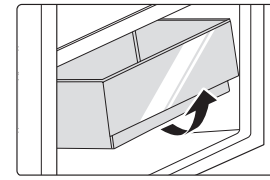

Defrosting

- The refrigerator is made based on the air-cooling principle and thus has automatic defrosting function. Frost formed due to change of season or temperature may also be manually removed by disconnection of the appliance from power supply or by wiping with a dry towel.

Out of operation

Power failure:

In case of power failure, even if it is in summer, foods inside the appliance can be kept for several hours; during the power failure, the times of door opening shall be reduced, and no more fresh food shall be put into the appliance.

Long-time nonuse:

The appliance shall be unplugged and then cleaned; then the doors are left open to prevent odor.

Moving:

Before the refrigerator is moved, take all objects inside out, fix the glass partitions, vegetable holder, freezing chamber drawers and etc. with tape, and tighten the leveling feet; close the doors and fix them with tape. During moving, the appliance shall not be laid upside down or horizontally, or be vibrated; the inclination during movement shall be no more than 45°.

ATTENTION

The appliance shall run continuously once it is started. Generally, the operation of the appliance shall not be nterrupted; otherwise the service life may be impaired.

TROUBLESHOOTING

The following simple issues can be handled by the user. Please call the after-sale service department if the issues are not solved.

Problem	Possible reason
Failed operation	• Check whether the appliance is connected to power or whether the plug is in well contact
	• Check whether the voltage is too low
	• Check whether there is a power failure or partial circuits have tripped
Odor	• Odorous foods shall be tightly wrapped
	• Check whether there is any rotten food
	• Clean the inside of the refrigerator
Long-time operation of the compressor	• Long operation of the refrigerator is normal in summer when the ambient temperature is high
	• It is not suggestible having too much food in the appliance at the same time
	• Food shall get cool before being put into the appliance
	• The doors are opened too frequently
Light fails to get lit	• Check whether the refrigerator is connected to power supply and whether the illuminating light is damaged
	• Have the light replaced by a specialist
Door can not be properly closed	• The door is stuck by food packages
	• The refrigerator is tiltedr.
Loud noises	• Check whether the floor is level and whether the refrigerator is placed stably
	• Check whether accessories are placed at proper locations

EN

Problem	Possible reason
Door seal fails to be tight	• Remove foreign matters on the door seal
	• Heat the door seal and then cool it for restoration (or blow it with an electrical drier or use a hot towel for heating)
Water pan overflows	• There is too much food in the chamber or food stored contains too much water,resulting in heavy defrosting
	• The doors are not closed properly, resulting in frosting due to entry of air and increased water due to defrosting
Hot housing	• Heat dissipation of the built-in condenser via the housing, which is normal When housing becomes hot due to high ambient temperature, storage of too much food or shutdown of the compressor is shut down, provide sound ventilation to facilitate heat dissipation
Surface condensation	• Condensation on the exterior surface and door seals of the refrigerator is normal when the ambient humidity is too high. Just wipe the condensate with a clean towel.
Abnormal noise	• Buzz: The compressor may produce buzzes during operation, and the buzzes are loud particularly upon start or stop. This is normal.
	• Creak: Refrigerant flowing inside of the appliance may produce creak, which is normal.

APPENDIX

EN

Special for new European standard

The ordered parts in the following table can be acquired from Service provider channel

Ordered part	Provided by	Minimum time required for Provision
Thermostats	Professional maintenance personnel	At least 7 years after the last model is launched on the market
Temperature sensors	Professional maintenance personnel	At least 7 years after the last model is launched on the market
Printed circuit boards	Professional maintenance personnel	At least 7 years after the last model is launched on the market
Light sources	Professional maintenance personnel	At least 7 years after the last model is launched on the market
Door handles	Professional repairers and final users	At least 7 years after the last model is launched on the market
Door hinges	Professional repairers and final users	At least 7 years after the last model is launched on the market
Trays	Professional repairers and final users	At least 7 years after the last model is launched on the market
Baskets	Professional repairers and final users	At least 7 years after the last model is launched on the market
Door gaskets	Professional repairers and final users	At least 10 years after the last model is launched on the market

Dear customer

1. If you want to return or replace the product, please contact the store where you buy.

(Remember to bring the purchase invoice)

2. If your product breaks down which needs to repair, please contact after-sales service provider.

ATTENTION

The model information in the product database, as well as the model identifier, can be obtained through a weblink scanned by a QR code, if any, on the energy efficiency label of the product.
For more information about the energy efficiency of the appliance, visit https://ec.europa.eu and search using the model name.
The model name can be found on the rating label of the appliance.

Midea

make yourself at home

www.midea.com

© Midea 2022 all rights reserved