EN

USER MANUAL

WASHING MACHINE

Front Loading

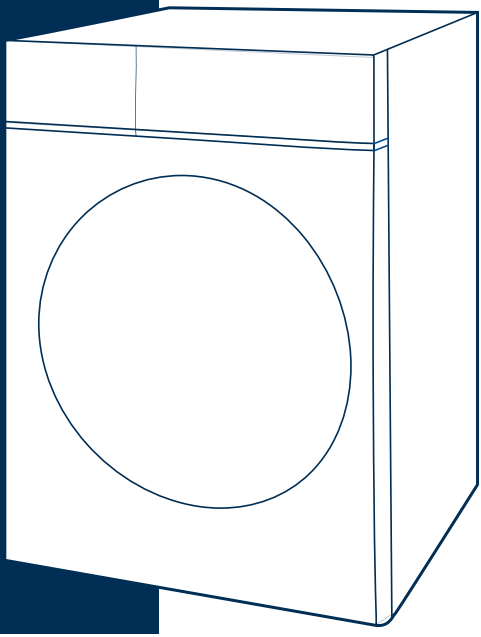

Read This Manual
Read all instructions and explanations for the installation before use. Follow the instructions carefully. Keep the operation instructions handy for later use. If the appliance is sold or passed on, ensure that the new owner always receives this operation instructions.

MODEL:
MF205W90BA50W

www.midea.com

THANK YOU LETTER

Thank you for choosing us! Before using your new product, please read this user manual thoroughly to ensure that you know how to operate the features and functions that your new appliance offers in a safe way.

CONTENTS

THANK YOU LETTER 01
SAFETY INSTRUCTIONS 02
SPECIFICATIONS 07
PRODUCT OVERVIEW 08
QUICK START GUIDE 09
PRODUCT INSTALLATION 12
OPERATION INSTRUCTIONS 16
APP SETUP AND OPERATION 31
CLEANING AND MAINTENANCE 33
TROUBLE SHOOTING 38
TRADEMARKS, COPYRIGHTS AND LEGAL STATEMENT 39
DISPOSAL AND RECYCLING 40
DATA PROTECTION NOTICE 41
WARRANTY CARD 42

SAFETY INSTRUCTIONS

Please read the user manual carefully before using the appliance. It provides important information on safety, installation, operation and maintenance. This will protect you and prevent damage to the appliance. An improper usage can cause personal injuries and damage to properties. Failing to follow these instructions shall void any warranty.
Keep the user manual for future reference. If the appliance is sold or passed on, make sure that the new owner always receives these safety instructions.

Intended Use

- This appliance is intended to be used in domestic household installation environments.
- This appliance is intended to wash textiles in household amounts suitable for domestic appliances.
- This appliance is intended for indoor usage only, not intended for outdoor, built in or commercial usage.
- Persons with reduced physical, sensory or mental capabilities or lack of experience and knowledge unless they have been given supervision or instruction concerning use of the appliance in a safe way and understand the hazards involved.

NOTE

All other types of usage are not permitted. Manufacturer is not liable for damage caused by improper usage or incorrect operation.

Safety with Children

- Children under 3 years shall be kept away from the appliance or continuously supervised.
- Children should be supervised that they do not play with the appliance.
- Children from the age of 8 can use the appliance safely after they have been given appropriate supervision or instruction concerning use of appliance.
- Cleaning and maintenance shall not be made by children without supervision.
- Children as well as pets may climb into the appliance. Check the appliance before every operation.
- Glass door may become very hot during washing. Keep children and pets far away from the appliance while it is operating.
- All washing detergents, fabric softener and cleaning agents are to be kept in a safe place out of the reach of children.

Explanation of Symbols

	WARNING OF ELECTRICAL VOLTAGE This symbol indicates that there is a danger to life and health of persons due to voltage.
	WARNING The signal word indicates a hazard with a medium level of risk which, if not avoided, may result in death or serious injury.
	CAUTION The signal word indicates a hazard with a low degree of risk which, if not avoided, may result in minor or moderate injury.
	NOTE The signal word indicates important information (e.g. damage to property), but not danger.
	OBSERVE INSTRUCTIONS This symbol indicates that a service technician should only operate and maintain this appliance in accordance with the operating instructions.

Installation Location and Surrounding

- Do not install the appliance on a carpet floor. Because an obstruction of the openings by a carpet can damage the appliance.
- Keep the appliance clear from heating sources and direct sunlight to avoid plastic and rubber parts to corrode.
- Do not use the appliance in humid environments or rooms containing explosive or caustic gas.
- The appliance must not be installed behind a lockable door, a sliding door or a door with a hinge on the opposite side to that of the appliance.
- Do not operate the appliance in rooms with a temperature of below 5°C. This can cause damages by frost to components, like hoses, which may burst or split. If it is unavoidable, make sure to drain the water completely from the appliance after every use. (see “Cleaning of drain pump”)
- Never use flammable sprays or substances in the immediate proximity of the appliance.
- Must not be installed in a non- stationary location like on a ship.

WARNING

- This appliance is intended for use at altitudes of up to 4000m above sea level.

Installation

- Pay attention to the chapter “Product Installation”.
- Remove all packaging material and transport bolts before operating the appliance. Otherwise, serious damage may result.
- Before setting up the appliance, check it for any externally visible damage. Do not install or use a damaged appliance.
- This appliance is equipped with a single inlet valve and can be connected to the cold water supply only.
- After installation the appliance, it shall be calibrated. (see “Quick Start Guide”)
- Before washing laundry for the first time, the appliance shall be operated once a machine cleaning program. (see “Quick Start Guide”)
- Do not put any excessively heavy objects on the appliance, like water containers or heating devices.

Electrical Connection

- Connect the appliance to a grounded outlet socket protected by a fuse complying with the data in the "Technical specifications” table.
- If needed, the grounding installation has to be made by a qualified electrician. Ensure that the appliance is installed in accordance with the local regulations.
- Don´t use multiple plugs, extension cords or similar. Risk of overheating!
- The electrical socket must be easily accessible after installation so that the appliance can be disconnected from the electricity supply if needed.
- The appliance must not have an external switching device such as a timer or connected to a circuit that is regularly switched on and off.
- Always pull at the plug, not at the cable.
- Do not pull the plug out of the mains outlet if there is flammable gas around. Risk of explosion!
- Make sure the supply cable is not trapped by the appliance, or it can get damaged.
- Always unplug the appliance if it is not being used.

⚠ WARNING: Electric Shock Hazard

- If the supply cord is damaged, it must be replaced by the manufacturer, its service agent or similarly qualified persons in order to avoid a hazard.
- If the appliance is damaged, it must not be operated unless repaired by the manufacturer, its service agent or similarly qualified persons. Never try to repair an appliance which is defective or presumed to defective.
- Never pour water over the appliance for cleaning purpose.
- Do not make any technical alterations to the appliance.
- Do not climb or sit on the appliance.
- Never pull out power plug with wet hands.

Water Connections

- The water inlet pressure should be between a maximum of 1 MPa (10bar) and a minimum of 0.05MPa (0.5 bar).
- The new hose-sets supplied with the appliance are to be used and that old hose-sets should not be reused.
- The water inlet and outlet hoses have to be securely installed and remain undamaged. Risk of water leakage!
- Check regularly the connections of the water inlet hose, the water tap and the outlet hose for possible problems due to changes of water pressure. If the connections loosen or leak, close the water tap and get it repaired.
- If you connect the drain hose to a sink, check that the water can drain quickly enough to prevent the sink from flooding. Make sure that the drain hose is properly secured so that it does not slip due to the force of the water flowing out.
- Close the tap if you are using the appliance for a longer period of time like on vacation, especially if there is no floor drain in the immediate proximity.

Operation

- Pay attention to the maximum load quantity of this appliance and the reduced load quantity of the single programs. The load quantity is expressed in kilogram dry laundry. (see “Program Settings)
- Make sure that all pockets are emptied. Sharp and rigid items such as coins, brooches, nails, screws, stones etc. may cause serious damages to appliance components, which can therefore cause damage to the laundry.
- Take care to remove lighters and matches before washing the laundry.
- Items that have been soiled with substances such as cooking oil, acetone, alcohol, petrol, kerosene, spot removers, turpentine, wax and wax removers should be washed manual in hot water with an extra amount of detergent before being washed in the appliance.
- Items containing foam rubber (latex foam), shower caps, water proof textiles, rubber backed articles and clothes or pillows fitted with foam rubber pads should not be washed in the machine.
- Washing detergents, fabric softener or washing additives should be used and dosed as recommended in the instructions by manufacture.
- If you would like to descale the appliance, only use a proprietary natural citric acid based descaling agent.
- If the detergent gets into your eyes, rinse them thoroughly with lukewarm water immediately. If swallowed, consult a doctor immediately and present the packaging or label of the detergent.
- Please do not close the door with excessive force. If it is found difficult to close the door, please check if the laundry are properly inserted and distributed.
- Take care when opening the door after using the steam function. Take a step back and wait until the steam has evaporated. Risk of scalding!
- Never try to open the door forcefully. The door will unlock shortly after the end of a program.

WARNING

- This appliance contains a UV emitter. Do not stare at the light source. (Suitable for the appliance with UV-light function)

Maintenance

- Pay attention to the chapter “Cleaning and Maintenance”.
- Always unplug the appliance and close the water tap before cleaning and maintenance and after each use.
- Never use any flammable, explosive or toxic cleaning solvents. Do not use gasoline and alcohol etc. as detergents. Only select detergents that are suitable for machine washing. Risk of fire and explosion!
- Do not remove the drain pump filter while there is still water in the appliance. Big quantities of hot water can leak out. Risk of scalding!

OBSERVE INSTRUCTIONS

For repairs it is recommended to consult a qualified repair service (e.g., a professional repairer, certified dealer or an authorized customer service center) in order to avoid a hazard. Manufacturer will not be responsible for damages caused by the intervention of not authorized persons. Failing to follow these instructions shall void any warranty.

Transport

Before transporting the appliance prepare it to following instructions:

- Unplug the appliance and close the water inlet tap.
- Remove the water inlet and the drain hose from the house installations.
- Let the water drain completely from the appliance. (see “Cleaning the Drain Pump”)
- Important: Re-install the 4 transport bolts in the back of the appliance. (see “Remove Transport Bolts”).
- Check if the door and the detergent dispenser are closed properly.
- This appliance is heavy. Transport with care. Never hold any protruding part of the machine when lifting. The machine door cannot be used as a handle.

CAUTION

Incorrect transportation can cause personal injuries and damage to properties. Ensure that the appliance is properly secured during transportation.
When lifting the machine, there is a risk of cuts in the lower area. Protective gloves must be worn.

SPECIFICATIONS

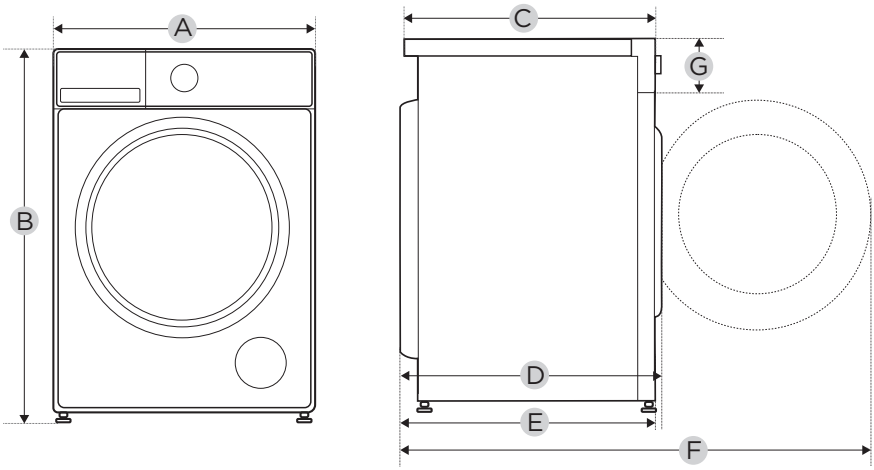

Model	MF205W90BA50W
Power Supply	220-240V~,50Hz
MAX. Current	10A
Standard Water Pressure	0.05MPa~1MPa
Washing Capacity	9.0kg
Dimension	
A	595mm
B	850mm
C	555mm
D	605mm
E	575mm
F	1075mm
G	120mm
Weight	65kg
Rated Power	1880W

NOTE

The washing capacity is the maximum load quantity in kg dry weight that can be washed at one time. Make sure that the laundry loaded into the appliance does not exceed the rated capacity.

PRODUCT OVERVIEW

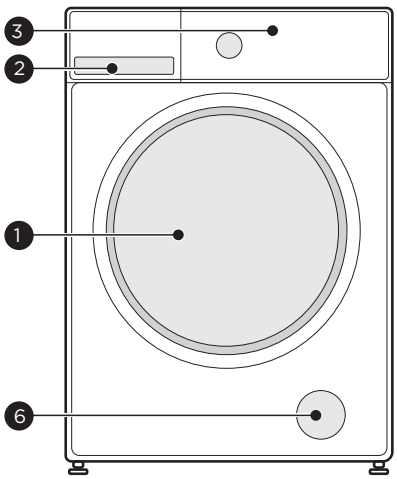

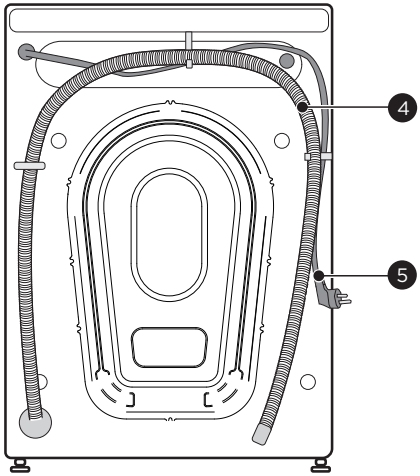

1	Door	4	Drain hose
2	Detergent dispenser	5	Power supply cord
3	Control panel	6	Service flap

NOTE

The illustration above is for reference only. Please take the appearance of the actual product as reference.

Accessories

4 x Cover caps	1 x Supply hose cold water	1 x User Manual	Acoustic sponge (optional)

QUICK START GUIDE

WARNING

Before operation, please make sure the machine is installed properly. See chapter product installation.

Calibration of Appliances

The appliance is able to detect the amount of laundry loaded to optimize performance by minimizing energy and water consumption, saving you money and time. For this reason, it's recommended to calibrate the appliance for best use.

1. Remove all accessories from the drum and close the door.
2. Insert the mains plug to the socket.
3. Switch on the washing machine, and within 10 seconds, press the option "Power Guard" and "Steam" simultaneously until "t19" is displayed.

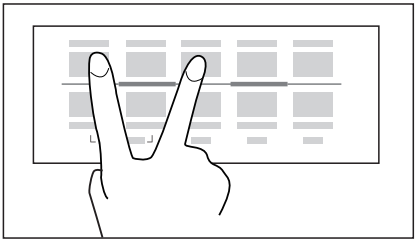

4. Start the calibration program by pressing ▷||.
   The appliance is successfully calibrated when "PAS" will be displayed.

CAUTION

When "FAL" will be displayed, the calibration of appliance failed. Repeat the calibration of appliance. If situation persists, please contact the customer service.

Drum Clean

Your appliance was thoroughly checked before it left the factory. To remove any residual water and to neutralize potential odors, it's recommended to clean your appliance before first use. For this reason, clean the washing machine by running the "DRUM CLEAN" program or "COTTON" program with the optional temperature of 90°C. Always run the DRUM CLEAN program without laundry and add 1 table spoon of heavy-duty detergent.

1. Before Washing

1. Insert the mains plug

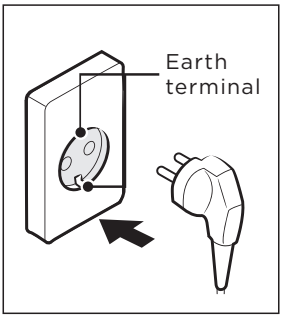

2. Open the water tap

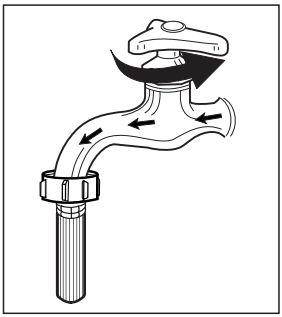

3. Load the laundry

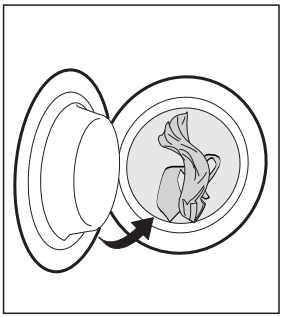

4. Close the door

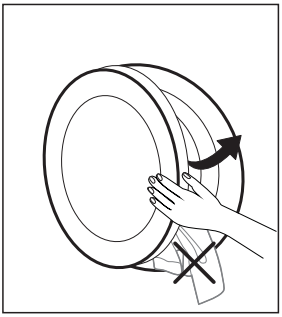

5. Add the detergents and washing aids

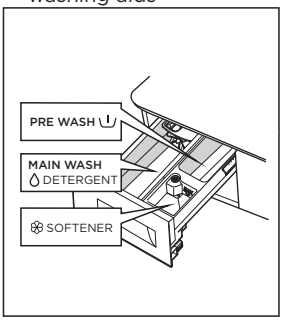

NOTE

- Detergent need to be added in compartment PRE WASH if the prewash option is selected.
- When closing the door, please make sure that your clothing does not get caught between the sealing ring and the appliance door to prevent water from leaking during operation or damaging the sealing ring by pulling.

2. Washing

1.Power on

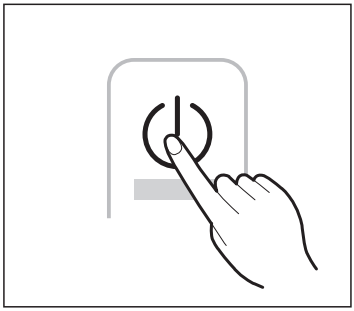

2.Select program

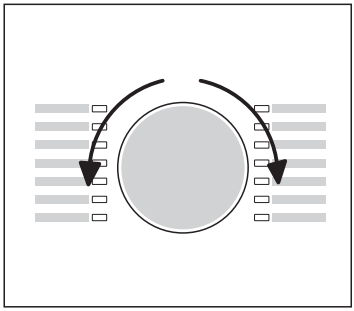

3.Select function or remain default settings

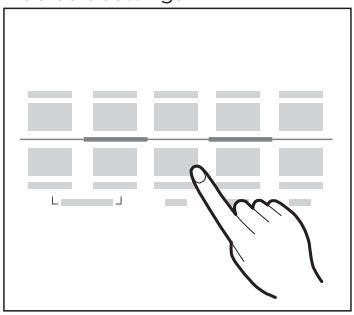

4.Press Start/Pause to start the program

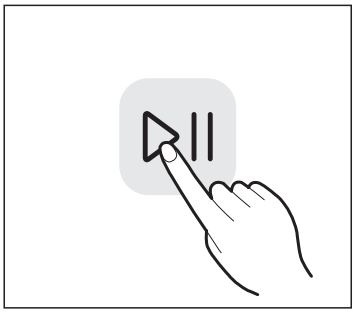

NOTE

The illustration above is for reference only. Please take the appearance of the actual product as reference.

3. After Washing

An acoustic signal is given and “End” will be displayed.

PRODUCT INSTALLATION

Tools Needed If Installation By Yourself

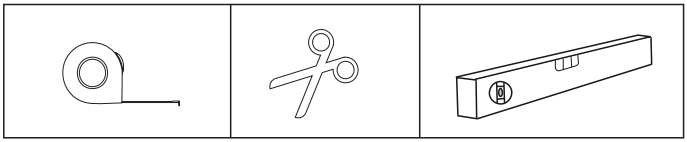

Tape measure | Scissors or Knife | Spirit level

Installation Area

WARNING

- Stability is important to prevent the product from moving!
- Make sure the washing machine is standing leveled and stable.
- Make sure that the product does not stand onto the power cord.
- Make sure to maintain the minimum distances from the walls as shown in the picture.

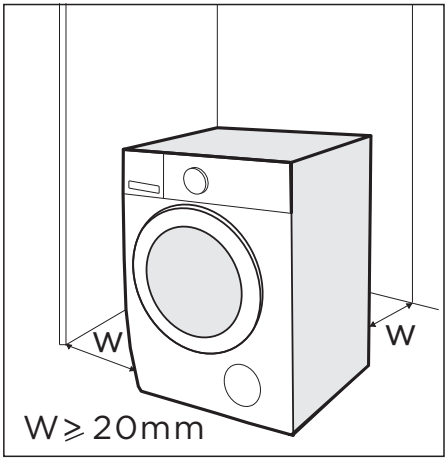

Before installing the washing machine, the location characterized as follows shall be selected:

1. Rigid, dry, and level surface.
2. Avoid direct sunlight.
3. Sufficient ventilation.
4. Room temperature is above 5 °C .
5. Keep far away from the heat sources such as coal or gas burning appliances.

Unpacking the Washing Machine

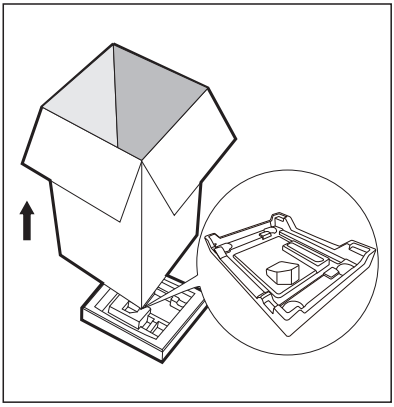

WARNING

- Packaging material (e.g. foils, styrofoam) can be dangerous for children.
- There is a risk of suffocation! Keep all packaging well away from children.
- Children can become entangled in the packaging film or swallow small parts and suffocate. Do not allow children to play with the packaging.

1. Remove the cardboard box and styrofoam packing.
2. Lift the washing machine and remove the base packaging.
3. Remove the tape securing the power supply cord and drain hose.
4. Remove the inlet hose from the drum.

Disposal of packaging material

- The packaging is designed to protect the appliance from damage during transportation. The packaging materials are environmentally friendly and should be recycled. Recycling the packaging can reduce the use of raw materials in the manufacturing process and the amount of waste in landfill sites.

Remove Transport Bolts

WARNING

You must remove the transport bolts from the backside before using the product.

1. Loosen the 4 transport bolts with a spanner.

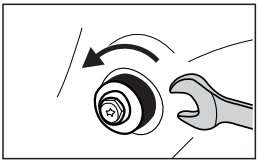

2. Remove the bolts including the rubber parts and keep them for future use.

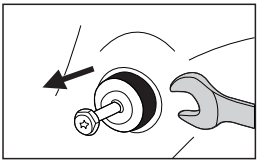

3. Close the holes by using the cover caps.

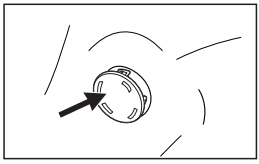

Levelling the Washing Machine

WARNING

The lock nuts on all four feet must be screwed tightly against the housing.

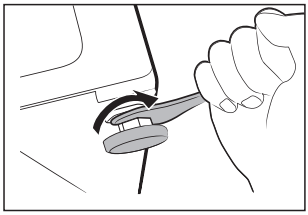

1. Loosen the lock nut.
2. Turn the feet until it reaches the floor.
3. Adjust the feet and lock the nuts with a spanner. Make sure the washing machine is level using a spirit level.

Connect the Water Supply Hose

WARNING

To prevent leakage or water damage, follow the instructions in this chapter.

- Do not kink, crush or modify water inlet hose.

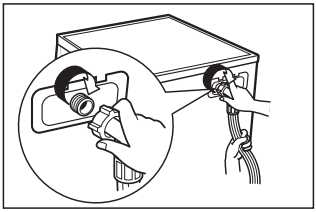

Connect the angled end of the water supply hose to the water inlet valve of the washing machine.
Connect the other end of the water inlet hose to the cold water tap connection.

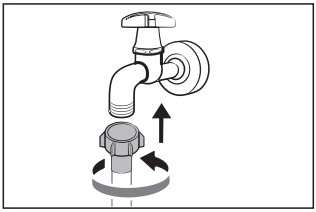

NOTE

- Tighten the connecting screw hand-tight. Check if the connections are tight.

Drain Hose

WARNING

- Do not kink or protract the drain hose.
- Position drain hose properly , otherwise damage might result in water leakage.
- It is not allowed to remove the buckle of drain pipe.

There are two ways to place the end of drain hose:

1.Put it into the water drain.

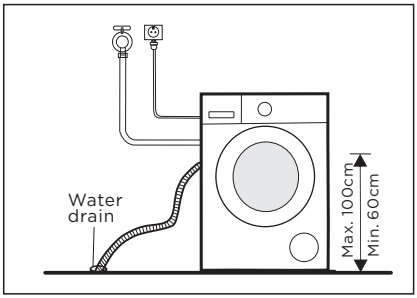

2. Connect it to the branch drain pipe of a sink.

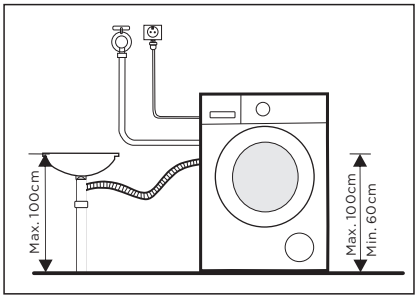

Acoustic Sponge

NOTE

- Please make sure to assemble the acoustic sponges, which can effectively reduce the noise caused by the machine while working, in order to provide you with a more peaceful and quiet living environment.

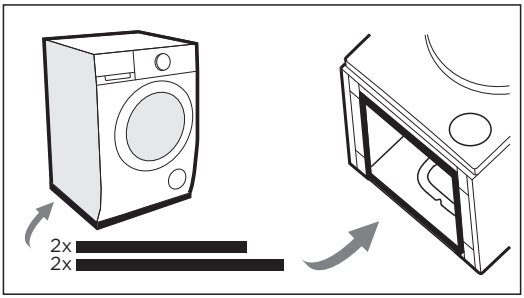

1. Get the machine laid on the floor, using some soft material like foam or clothes between the machine and floor for a protection;
2. Stick the 2x longer sponges to the longer bottom edges of machine, and the 2x shorter sponges to the shorter bottom edges.

OPERATION INSTRUCTIONS

Before Each Washing

- The ambient temperature of the washing machine should be between 5°C and 40°C. If used under 0°C, the inlet valve and draining system may be damaged. If the appliance is installed under freezing conditions, it should be transferred to normal ambient temperature to ensure the water supply hose and drain hose can unfreeze before use.
- Please check your laundry care labels and the dosing recommendation of the detergent manufacture before wash. Use non-foaming or less-foaming detergent suitable for washing machine properly.

1. Take all items out of the pockets

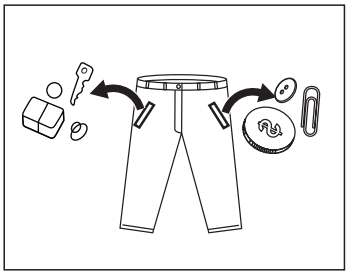

2. Sort laundry according to color and type of fabric

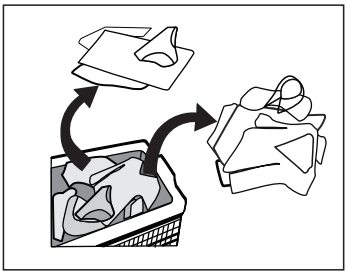

3. Tie together long textile strips and belts, close zips and button

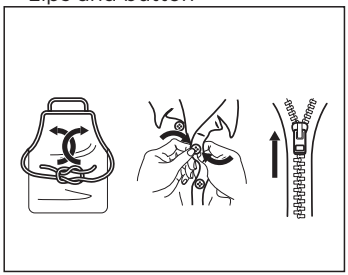

4. Put small items into a laundry bag

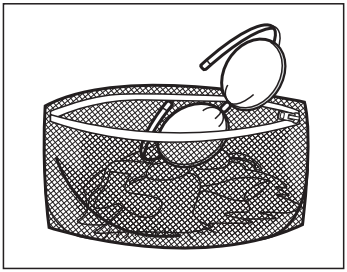

WARNING

- Do not wash textiles to which adhered any volatile or flammable substance such as cleaning agent, dry cleaning agent, spot remover, acetone, gasoline, kerosene, beauty oil, massage oil, animal oil, machinery oil, dry cleaning oil, volatile agent, alcohol, turpentine, wax, wax remover, banana water, disinfectant tablets, resin, etc.
- Washing single laundry items may easily create big imbalance. Therefore it is suggested to add one or two more laundry items to the wash so that spin can be done smoothly.
- Do not wash and spin water-proof clothing or textiles.

Detergent Dispenser

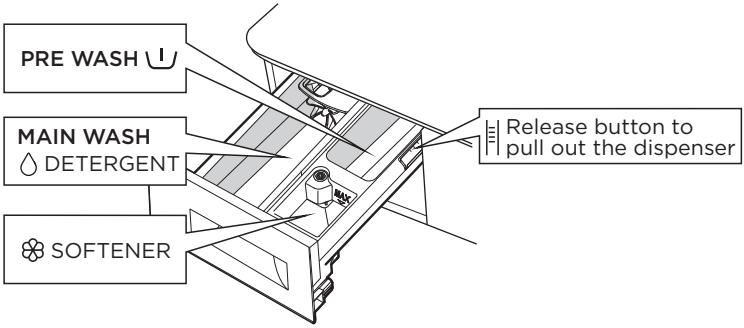

CAUTION

- Detergent need to be added in compartment PRE WASH if the prewash function is selected.
- Do not use the PRE WASH function when you use liquid detergent, apply only washing powder with the PRE WASH dispenser.
- If you use detergent pods or similar, place them directly in the washing machine drum.

Program				Program			
QUICK 45′/15′		●	○	HealthGuard	○	●	○
ECO 40-60		●	○	COTTON	○	●	○
20°C		●	○	MIX	○	●	○
DOWN JACKETS		●	○	SYNTHETICS	○	●	○
RINSE&SPIN			○	WOOL		●	○
SPIN ONLY				BEDLINEN	○	●	○
DOWNLOAD	○	●	○	DRUM CLEAN			
SPORT	○	●	○	SILK		●	○
DELICATE		●	○	SHIRTS	○	●	○
JEANS	○	●	○				

● Means must ○ Means optional

*DOWNLOAD default program is SPORT.
The programs (SPORT/DELICATE/JEANS/SILK/SHIRTS) can only be selected by SmartHome App on mobile phones.

Detergent Recommendation

Recommended washing detergent	Type of laundry and textile	Program	Washing temp. °C
Heavy-duty detergent with bleaching agents and optical brighteners	White laundry made from boil-proof cotton or linen	COTTON, ECO 40-60	40/60
Colour detergent without bleaching agent and optical brighteners	Coloured laundry made from cotton or linen	COTTON	30/40
Color or mild detergent without optical brighteners	Coloured laundry made from easy care fibres or synthetic materials	COTTON, SYNTHETICS	30/40
Mild washing detergent	Delicate textiles, silk, viscose	SYNTHETICS	30
Special wool detergent	Wool	WOOL	30/40

NOTE

- Please choose the suitable type of detergent to receive best washing performance results and a minimum of water and energy consumption.
- To achieve the best cleaning result a proper detergent dosing is important.
- Use a reduced detergent amount if the drum is not filled completely.
- Always adjust the amount of detergent to the water hardness, if your tap water is soft, use less detergent.
- Dose according to how dirty your articles of clothes are, less dirty articles of clothes require less detergent.
- Highly concentrated (compact detergent) requires particularly accurate dosing.

Following signs indicate an overdosing of detergent:
- heavy foam formation
- poor washing and rinsing result

Following signs indicate an underdosing of detergent:
- laundry turns grey
- built-up of limescale deposits on the drum, the heating element and/or the laundry

Control Panel

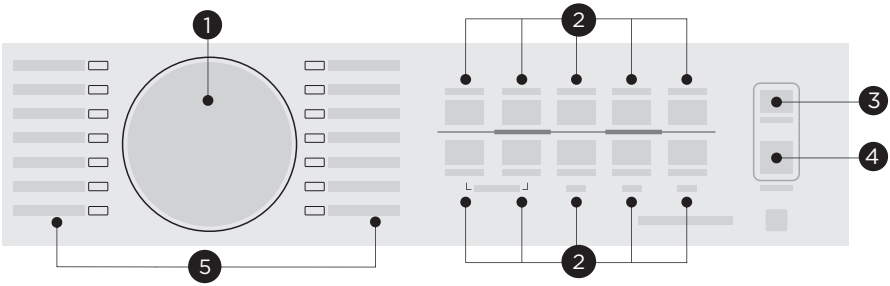

1 Display

The display shows settings, estimated remaining time, options and status messages.

2 Option

Press buttons to change program parameters or select additional functions.

3 On/Off

Power on or off the appliance.

4 Start/Pause

Start or pause your program.

5 Program

Choose appropriate program according to the laundry type.

NOTE

- The illustration above is for reference only. Please take the appearance of the actual product as reference.

Display

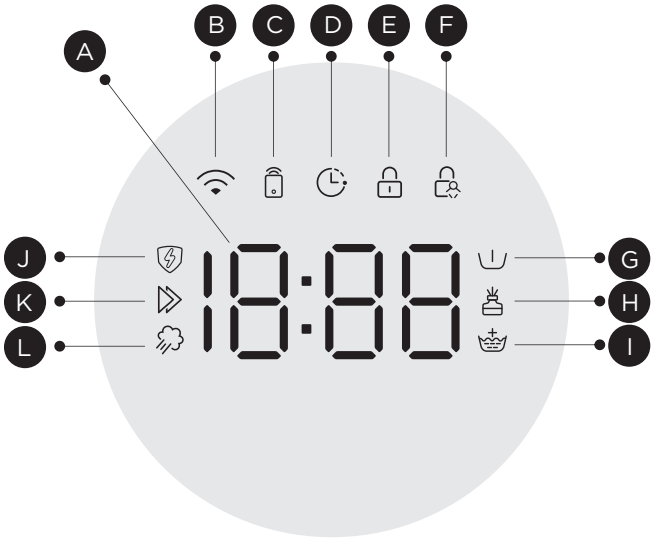

Ⓐ Display	
Wash Time 1:25	Delay End 2H
Speed 400	End End
Error E30	Temp 30
Ⓑ Wireless Network	Ⓒ Remote
Ⓓ Delay End	Ⓔ Door Lock
Ⓕ Child Lock	Ⓖ Pre Wash
Ⓗ Perfume+	Ⓘ Extra Rinse
Ⓙ Power Guard	Ⓚ Turbo
Ⓛ Steam	

Program Settings

Program	Load Quantity (kg)	Display Time (h:min)
	9.0	9.0
QUICK45′/15′	2.0	0:45/0:15
ECO 40-60	9.0	3:48
20°C	4.5	1:01
DOWN JACKETS	2.0	1:27
RINSE&SPIN	9.0	0:20
SPIN ONLY	9.0	0:12
DOWNLOAD	4.5	0:47
DRUM CLEAN	--	1:18
BEDLINEN	9.0	1:48
WOOL	2.0	1:03
SYNTHETICS	4.5	3:18
MIX	9.0	1:20
COTTON	9.0	3:39
HealthGuard	9.0	2:39
SPORT*	4.5	0:47
DELICATE*	2.5	0:50
JEANS*	9.0	1:35
SILK*	2.0	0:50
SHIRTS*	4.5	1:00

*DOWNLOAD default program is SPORT.
The programs (SPORT/DELICATE/JEANS/SILK/SHIRTS) can only be selected by SmartHome App on mobile phones.

NOTE

- Loading the household washing machine up to the load quantity indicated for the respective programs will contribute to energy and water savings.
- The washing capacity is the maximum load quantity in kg dry weight that can be washed at one time. Make sure that the laundry loaded into the appliance does not exceed the rated capacity.

Consumption Data

The listed consumption data are measured in accordance with EN 60456. The actual consumption data may vary from the given data. The load quantity, type of fabric, composition of the laundry, selected level of soiling and options as well as ambient conditions can influence the consumption data.

MF205W90BA50W							
Consumption per program	Nominal Load Capacity [kg]	Temperature [°C]	Program duration [hh:mm]	Energy Consumption [kWh]	Water Consumption [L]	Highest temperature [°C][1)]	Residual Moisture [%] / Spin Speed [rpm][2)]
COTTON	9.0	40	3:39	1.056	78	40	53%/1400
MIX	9.0	40	1:20	0.813	85	40	65%/1000
20℃	4.5	20	1:01	0.206	48	20	65%/1000
QUICK 15′	2.0	Cold	0:15	0.030	31	cold	70%/800
SYNTHETICS	4.5	40	3:18	0.756	48	40	35%/1200
ECO 40-60[3)]	9.0	--	3:48	0.358	67.0	25	53.9%/1351
	4.5	--	2:54	0.226	49.0	26	53.9%/1351
	2.5	--	2:54	0.160	36.0	25	53.9%/1351

1: The highest temperature in degrees Celcius that the laundry reaches for at least 5 minutes during the program.
2: The residual moisture of the laundry in percent reached at the end of the program at the specified spin speed
3: The ECO 40-60 program is the energy saving program and is suitable for washing normally soiled cotton laundry. It's the most efficient program in terms of energy consumption for cotton laundry. It's used to assess the compliance with the Delegated Regulation of the EU Commission 2019/2023 Ecodesign and 2019/2014 Energy Labeling, measured in accordance with EN 60456.

NOTE

- The most efficient programs in terms of energy consumption are generally those that perform at lower temperatures and longer program duration.
- Loading the household washing machine up to the load quantity indicated for the respective programs will contribute to energy and water savings.
- The noise level and the residual moisture content of the laundry are influenced by the spin speed during the final spin: the higher the spin speed at final spin, the lower the residual moisture content of the laundry, but the higher the noise level.

CAUTION

- If there is any interruption of the power supply while the appliance is operating, a special memory stores the selected program. The appliance will continue the program when the power supply is re-established.

Program Description

The chart describes the characteristics of the individual programs.

Programs	
QUICK45′/15′	This procedure defaults to 45′, press the “Turbo” to switch to 15′, which is suitable for washing few and not very dirty clothes quickly. Sometimes, after the quick 15’ procedure is completed, the moisture content of clothes is high.
ECO 40-60	Able to clean normally soiled cotton laundry. For loads that can be washed at 40 °C or 60 °C in the same program.
20°C	Able to clean lightly soiled cotton laundry at a nominal temperature of 20 °C. Note: Do not exceed the maximum loading quantity.
DOWN JACKETS	This program is specially designed for washing down jackets.
RINSE&SPIN	For barely worn and new garments that need to be rinsed. Note: You can use fabric softener to freshen up your garments.
SPIN ONLY	Spins and drains the water.
DOWNLOAD	By using APP, you can download additional programs to your washing machine and select them under the Download program position. Choose the program that meets your needs in the APP.
DRUM CLEAN	Special cleaning program for your washing machine to remove dirt and limescale deposits. Clean your washing machine regularly to keep laundry washing sustainable. Note: Always run the Drum Clean program without laundry and add 1 table spoon of heavy-duty detergent.
BEDLINEN	This program is specially designed for washing bed linen.
WOOL	Gentle wash program to prevent shrinkage for machine-washable wool or wool blend fabrics. Note: Reduce the spin speed for very delicate woolen garments.
SYNTHETICS	Suitable for easy-care textiles made of synthetic or mixed fabric, such as trousers, T-shirts, pullovers and socks. Note: Reduce the spin speed for crease sensitive textiles. Do not exceed the maximum loading quantity.
MIX	For washing mixed loads made of cotton, synthetic including mixed fabric.
COTTON	This program is suitable for washing heavy-duty cotton items. Note: Use Mix program to wash mixed loads type made of cotton and synthetics.
HealthGuard	For washing mixed loads made of cotton, synthetic including mixed fabric. Particularly suitable for increased hygiene requirements. Note: Do not exceed the maximum loading quantity.
SPORT*	Washing the activewear.

Program Description

Programs	
DELICATE*	For delicate, washable textiles, e.g. made of silk, satin, synthetic fibres or blended fabrics.
JEANS*	Specially for jeans.
SILK*	Washable items made from silk,viscose and synthetics.
SHIRTS*	The program is dedicated to clean shirts and blouses made of cotton and mixed fabric. Note: Pre-treat the collar and cuffs depending on the level of soiling.

*DOWNLOAD default program is SPORT.
The programs (SPORT/DELICATE/JEANS/SILK/SHIRTS) can only be selected by SmartHome App on mobile phones.

The wool wash cycle of this machine has been tested and approved by The Woolmark Company for the washing of wool garments labelled as “hand wash” provided that the products are washed according to the instructions on the garment label and those issued by the manufacturer of this washing machine.
M1912:MF205W90BA50W

Option

The charts shows which program offers which option for adjustment.

Program	Default Temperature(℃)	Default spin speed(rpm)	Additional Options
		1400	
QUICK45′	20	800	
QUICK15′	Cold	800	
ECO 40-60	--	--	
20°C	20	1000	
DOWN JACKETS	40	800	
RINSE&SPIN	--	1000	
SPIN ONLY	--	1000	
DOWNLOAD	20	800	
DRUM CLEAN	90	--	
BEDLINEN	40	1000	
WOOL	Cold	800	
SYNTHETICS	40	1200	
MIX	40	1000	
COTTON	40	1400	
HealthGuard	60	800	
SPORT	20	800	
DELICATE	30	800	
JEANS	30	800	
SILK	30	600	
SHIRTS	30	800	

Spin
If needed, the spin speed can be adjusted in the following steps by pressing the button: 0-400-600-800-1000-1200-1400.

Remote Control
This is the button of remote control, if you want to use your smartphone to control the appliance remotely, you need to press [Remote] button. Considering the safe operation of appliance, the smartphone remote control should meet the following conditions:
1. The appliance should connect to the internet;
2. The door of drum should be closed.
Remark:
-. If the door is open in anytime, the remote control function will be disabled.
-. The remote control function is turned off at the end of each washing program automatically, if you want to use remote control function again, you need to turn it on again.

Pre Wash
For pre-treatment of heavily soiled textiles with adhering dirt such as soil, dust or sand.
Remark:
The detergent must be dispensed into the compartment PRE WASH. Use one third of the detergent for the pre-wash phase and two thirds for the main wash phase.

Wireless Network
Method to turn on the Wireless Network function
1. Press [Remote] button for 3 seconds to turn on the Wireless Network function, it can also reset the network.

Method to turn off the Wireless Network function
1. Press [Spin] 3 seconds to turn off the Wireless Network function.

Remark:
- Information how to connect your appliance to SmartHome App see“ APP SETUP AND OPERATION ” .

Temp

Temperature
If needed, the washing temperature can be adjusted in the following steps by pressing the button:
Cold - 20°C - 30°C - 40°C - 60°C - 90°C.

NOTE

Usage counter

1. Unplug the equipment for 10s and reconnect again.
2.Power on and within 10s, please press “Power Guard” and “Remote” on control panel simultaneously and continuously for around 5s until the device display shows digits-- the value can indicate the times of equipment usage.
3.Repeat step 1 again and customer can resume to normal operation.

Perfume+
The function helps to modify the water flow mode and time. Then help the fibers to absorb softener more efficiently. As a result, with dosing the same amount of softener, we can achieve better fragrance left on the cloths.

Extra Rinse
The laundry will undergo an extra rinse after selecting this function.

Turbo
Turbo shortens the actual washing time. Recommended for lightly soiled textiles and small loads.

Power Guard
Turn off heating, enhance washing intensity, shorten program time, and achieve energy-saving effect.

Steam
Special pre-treatment of textiles in which warm steam penetrates deep into the textile fibers to increase the effectiveness of the washing performance.

Delay End
This function is used to set a time-delayed end of the wash program.
1. Select a program.
2. Press the delayed end button and select a time between 0 and 24 hours.
3. Press [Start/Pause] to start the time-delayed program.

Choose program › Setting time › Start

To cancel the delayed end function, press the “Delayed End” button again before starting the program until the display shows 0 hours.

Child Lock
The child lock is intended to prevent children from using the controls inappropriately.
This setting deactivates the function of all buttons with the exception of the On/Off button.

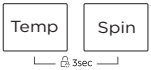

Press [Temp] and [Spin] simultaneously for 3 seconds until the buzzer beeps. The child lock is now activated.
The child lock can only be deactivated again by pressing the two buttons simultaneously again!

CAUTION

When the Child Lock is activated, the display will alternately show “CL” and the remaining time.
Pressing any other button will cause the Child Lock indicator to flash. When the program ends, “CL” and “End” will alternate on the display.

Add item

You can use this function to add forgotten laundry items. After starting the wash program, the door releases, provided the water level and temperature do not pose a risk.

1. press the [Start/Pause] button for 3 seconds
2. the washing program is paused and the door is released
3. reload the laundry and close the door
4. press the [Start/Pause] button and the wash program will continue

Press[▷||]3 seconds Reload the laundry Start

CAUTION

- Don't use the Reload function when the water level over the edge of the inner tub or the temperature is higher.

Mute the buzzer

Choose the Program Press the [Extra Rinse] for 3 seconds, the buzzer is mute.

To act the buzzer function, press the button again for 3 seconds.
The setting will be kept until the next reset.

CAUTION

- After Muting the buzzer function, the sounds will not be activated any more.

Product Fiche

Supplier's name or trade mark([a])([c]):

Supplier's address([a])([c]):

Model identifier([a]):MF205W90BA50W

General product parameters:

Parameter	Value		Parameter	Value	
Rated capacity([b])(kg)	9.0		Dimensions in cm([a])([c])	Height	85
				Width	60
				Depth	56
Energy efficiency index([b]) (EEI_w)	25.7		Energy efficiency class([b])	A ([d])	
Washing efficiency index([b])	1.031		Rinsing effectiveness (g/kg)([b])	5.0	
Energy consumption in kWh per cycle, based on the eco 40-60 programme at a combination of full and partial loads. Actual energy consumption will depend on how the appliance is used.	0.244		Water consumption in litre per cycle, based on the eco 40-60 programme at a combination of full and partial loads. Actual water consumption will depend on how the appliance is used and on the hardness of the water.	50	
Maximum temperature inside the treated textile ([b])(℃)	Rated capacity	25	Weighted remaining moisture content ([b])(%)	53.9	
	Half	26			
	Quarter	25			
Spin speed([b])(rpm)	Rated capacity	1351	Spin-drying efficiency class ([b])	B ([d])	
	Half	1351			
	Quarter	1351			
Programme duration([b])(h:min)	Rated capacity	3:48	Type	free-standing	
	Half	2:54			
	Quarter	2:54			
Airborne acoustical noise emissions in the spinning phase([b]) (dB(A) re l pW)	72		Airborne acoustical noise emission class ([b])(spinning phase)	A ([d])	
Off-mode (W) (if applicable)	0.50		Standby mode (W)(if applicable)	N/A	
Delay start (W) (if applicable)	4.00		Networked standby (W)(if applicable)	2.00	

Minimum duration of the guarantee offered by the supplier ([a])([c]):

This product has been designed to release silver ions during the washing cycle	NO

Additional information:

Weblink to the supplier's website, where the information in point 9 of Annex II to Commission Regulation (EU)2019/2023([c]) is found:

([a]) this item shall not be considered relevant for the purposes of Article 2(6) of Regulation (EU) 2017/1369,
([b]) for the eco 40-60 programme.
([c]) changes to this item shall not be considered relevant for the purposes of paragraph 4 of Article 4 of Regulation (EU)2017/1369.
([d]) it the product database automatically generates the definitive content of this cell, the supplier shall not enter these data.

1) The actual energy consumption will depend on how the appliance is used.
2) The actual water consumption will depend on how the appliance is used and on the hardness of the water.
3) Delivery of the spare parts within 15 working days after having received the order.

Product Data Sheet concerning（EU）2019/2014.

The product data sheet for your appliance can be found online.
Go to https://eprel.ec.europa.eu and enter the model identifier for your appliance to download the data sheet.
The model identifier for your appliance can be found in the technical specifications section.

APP SETUP AND OPERATION

Use Your Appliance With the SmartHome App

Before you start, make sure that:

1. Your smartphone is connected to home wireless network,and you know the network password.
2. Make sure you are near the home appliance.
3. The 2.4GHz band wireless signal is enabled on your wireless router.

Follow the below steps to enter the remote control state

Download the SmartHome App

On an app market (Google Play Store, Apple App Store), search for "SmartHome*" and find the SmartHome App. Download and install it on your phone. You can also download the app by scanning the QR code below.

Register and Log In

Open the SmartHome App, and create a new account to start (you can also register through a third-party account). If you already have an existing account, use the account to log in.

Connect Your Appliance to SmartHome

1. Please make sure your mobile phone is connected to a wireless network. If it is not, go to settings and enable wireless networks and bluetooth.

2. Please turn on you appliance
2.1 Rotate the rotary switch to select any program
2.2 Press button [Remote] for 3 seconds to turn on the Wireless Network

3. Open SmartHome App on your phone.

4. If a message of "Smart devices discovered nearby" appears, click to add.

5. If no message appears, select "+" on the page and select your appliance in the list of nearby devices available. If your device is not listed, please add your device manually by the device category and device model.

6. Connect your appliance to the wireless network according to instructions on App. If the connection fails, please follow the instructions provided by the App to continue with the operation.

Start the Remote Control

Rotate the rotary switch randomly to indicate one of the programs, and press [ ] continuously until the remote control icon light up in display, which means it has entered the remote control state and you can start to control remotely.

Wireless Network Status Light

Slowly flashing	Waiting for connection
Quickly flashing	Connecting
Solid	Connected to your wireless router

NOTE

1. Make sure your appliance are powered on.

2. Keep your mobile phone close enough to your appliance when you are connecting your device to the network.

3. Connect your mobile phone to the wireless network at home, and make sure you know the password of the wireless network.

4. Check if your wireless router supports 2.4 GHz band and turn it on. If you are not sure whether the router supports 2.4 GHz band, please contact the router manufacturer.

5. The appliance cannot connect to the wireless network that requires authentication, and it usually appears in public areas such as hotels, restaurants, etc. Please connect to a wireless network that does not require authentication.

6. Turn off the WLAN+ (Android) or WLAN Assistant (iOS) function of your mobile phone when connecting your appliance to the network.

7. In the case that your appliance connected to a wireless network before but it needs to reconnect, please click "+" on the App Home page, and add your appliance again by the appliance category and model according to the instructions on App.

8. The Bluetooth Low Energy max E.I.R.P.: 8.0dBm, 2.4GHz Wireless Network max E.I.R.P.:17.5dBm, Frequency band: 2400MHz~2483.5MHz, Temperature of Operation: -20°C~85°C

9. The product opens TCP 6444, UDP 6445 network ports, and a UDP random network port for device discovery and network configuration.

CLEANING AND MAINTENANCE

Cleaning and Care

Clean your washing machine regularly to keep laundry washing sustainably.The cleaning recommendation is described in the corresponding chapter.

WARNING

- Always unplug the appliance and close the water tap before cleaning and maintenance.

Cleaning the Cabinet

Proper maintenance of the appliance can extend its working life. The surface can be cleaned with diluted non-abrasive neutral detergents when necessary. If there is any water overflow, use a towel to wipe it off immediately. Never use sharp items to clean the appliance. It's recommended to clean the cabinet as needed.

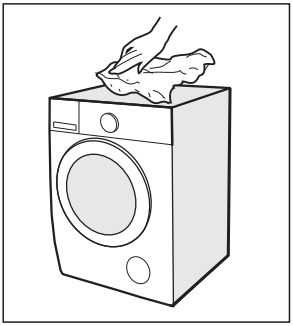

CAUTION

- Never use abrasive or caustic agents. Such as formic acids or its diluted solvents or similar substances, like alcohol or chemical products.

Cleaning the Drum

Any rust stains left inside the drum must be removed immediately using chlorine-free cleaning agents. Never use steel wool for cleaning the drum!

After 60 wash programs, U01 is displayed as a reminder on the control panel. Please follow the reminder and carry out the cleaning of the drum to ensure normal operation of the appliance.

NOTE

- Keep any laundry away from the machine while cleaning the drum.

Cleaning the Door Seal and Glass

Wipe the glass and seal after each wash to remove lint and stains. If lint builds up it can cause leakages.
Remove any coins, buttons and other objects from the seal after each wash.
After 60 wash programs, U01 is displayed as a reminder on the control panel. Please follow the reminder and carry out the cleaning of the door seal to ensure normal operation of the appliance.

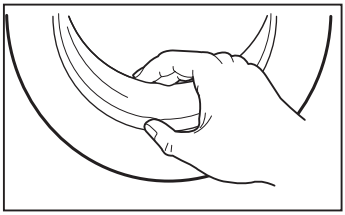

Cleaning the Inlet Filter

Clean the filter as needed. A diminishing water flow is a sign that the filter may be blocked.

1. Close the tap and remove the water supply hose from it.

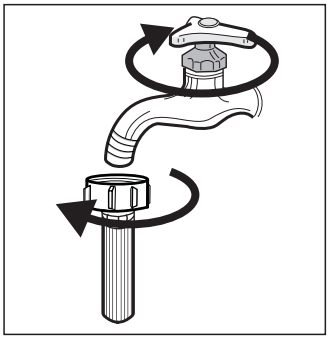

2. Clean the filter with a brush.

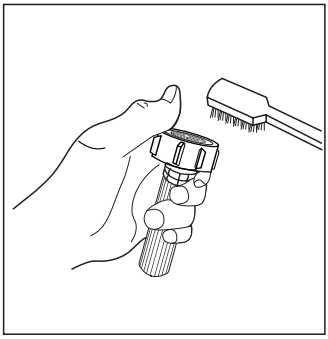

3. Unscrew the water supply hose from the backside of the appliance.

4. Clean the filter with a brush.

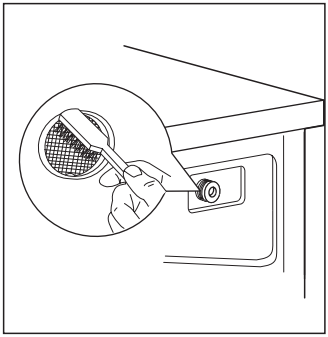

5. Reconnect the water supply hose again.

6. After 60 wash programs, U01 is displayed as a reminder on the control panel. Please follow the reminder and carry out the cleaning of the inlet filter to ensure normal operation of the appliance.

Cleaning the Detergent Dispenser

Limescale and detergent residues can build up on the detergent dispenser. It's therefore recommended to clean the detergent dispenser if needed.

- Press down the release [⊟] on the softener cover and pull the detergent drawer out of the detergent box.
- Lift the softener cover off the detergent drawer and wash both items with water.
- Clean the inside of the detergent box with a brush.
- Restore the softener cover and push the drawer back into the detergent box.

1. Press the release and remove the detergent drawer

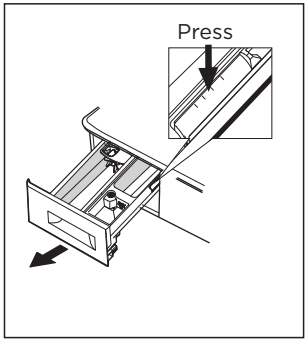

2. Clean the detergent drawer and the softener cover under water

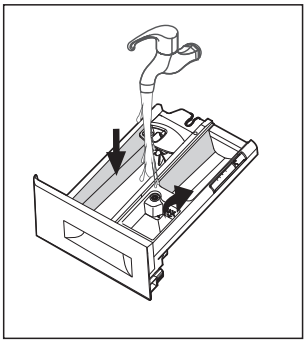

3. Clean the detergent box with a soft brush

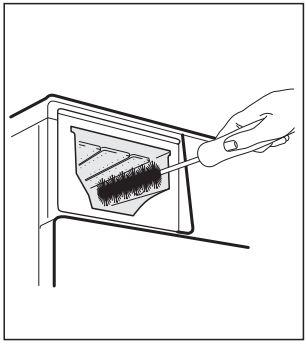

4. Insert the detergent drawer

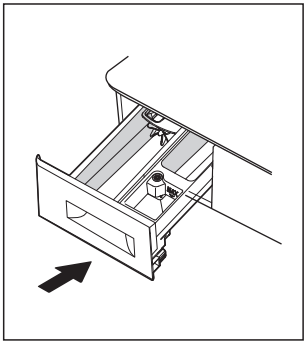

NOTE

- Do not use abrasive or caustic agents to clean plastic parts.
- After 60 wash programs, U01 is displayed as a reminder on the control panel. Please follow the reminder and carry out the cleaning of the detergent dispenser to ensure normal operation of the appliance.
- Always leave the detergent drawer slightly open so that it can dry properly.

Cleaning the Drain Pump Filter

If there is a problem with the drain pump, clean it according to the following cleaning instructions.

WARNING

- Make sure that the washing machine has finished the washing program and load is removed of drum. Switch it off and unplug the washing machine before cleaning the drain pump filter.
- Be careful of hot water. Wait for water cooling down. Risk of scalding!
- After 60 wash programs, U01 is displayed as a reminder on the control panel. Please follow the reminder and carry out the cleaning of the drain pump filter to ensure normal operation of the appliance.

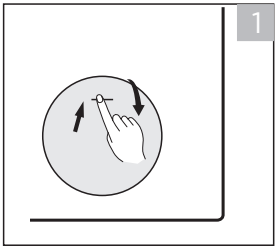

Open the lower cover cap

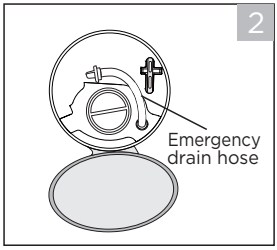

Pull out the emergency drain hose, and take off the hose cap

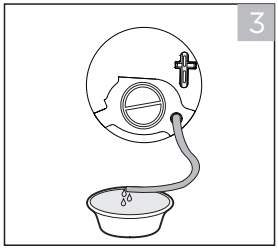

After the water has flown out completely, reinsert the drain hose

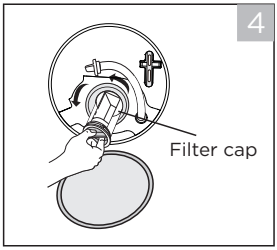

Open the pump filter by turning to the counter clockwise

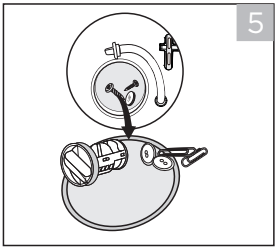

Remove extraneous objects

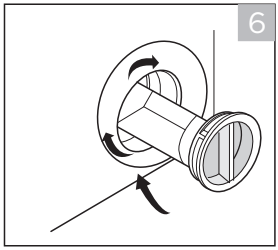

Carefully reinsert the pump filter and screw the lower cover cap in clockwise

NOTE

- Make sure that hose cap of emergency drain hose are reinstalled properly, otherwise water may leak.
- Some appliances don't have emergency drain hose, so step 2 and step 3 can be skipped.
- When the washing machine is under operation and depending on the program selected there can be hot water in the pump. Never remove the pump cover during a washing program, always wait until the washing machine has ended the operation and load is removed of drum.

Emergency Door Release

In case of power failure or other circumstances and door cannot be opened.
If it is necessary to open the door under this circumstances. Wait until the machine and the water have completely cooled down. Please pull down the pull cord inside emergency door and restore the pull cord after opening the door.

Emergency door pull cord

1. Open filter door.

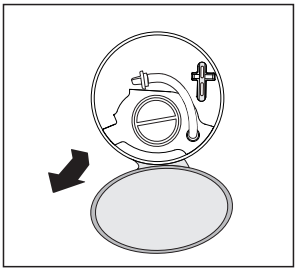

2. Using a straight screwdriver (or other non-sharp tool), insert into the emergency door pull cord.

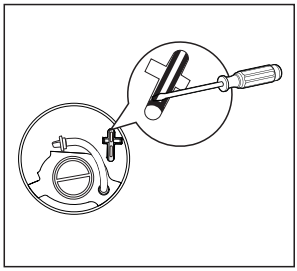

3. Pull down the emergency door pull cord (refer to direction of the arrow in the picture). If unlocked successfully, you will find the door lock icon will go out.

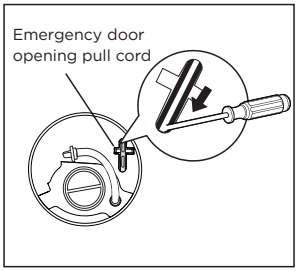

CAUTION

It is not allowed to use the emergency switch pull cord during washing program.
Be careful of hot water. Wait for water cooling down.
Risk of scalding!

TROUBLE SHOOTING

Whenever there is a problem with the appliance, check if you can solve it following the tables below. If the problem persists, please contact the customer service.

Description	Possible Cause	Solution
Appliance does not start	Door is not closed properly. Clothes are stuck.	Check the laundry. Close the door properly and restart.
Door can´t be opened	Safety protection is activated.	Disconnect the power and restart.
Water leakage	Connections are not tight enough.	Check and fasten the water inlet hose. Check and clean the outlet hose.
Detergent residues in the detergent dispenser	Detergent is damp and/or clotted.	Clean and wipe the detergent dispenser dry.
Indicator or display does not work	PC board or harness have connection problems.	Switch off the power and check if the mains plug is connected properly.
Abnormal noise	Fixing bolts are still in place. Floor is not solid or level.	Check if the fixing bolts have been removed. Make sure the appliance is installed on a solid and level floor. Leveling the appliance again.

Error Codes

Description	Possible Cause	Solution
E30	Door is not closed properly.	Close the door properly and restart.
E10	Water injecting problem during washing program.	Check if the water pressure is high enough. Straighten the water pipe. Clean the inlet valve filter.
E21	Overtime water draining	Check the drain hose and pump filter for blockage.
E12	Water overflow	Restart the appliance.
EXX	Others	Restart the appliance. If problem persists, please contact the customer service.

TRADEMARKS, COPYRIGHTS AND LEGAL STATEMENT

Midea logo, word marks, trade name, trade dress and all versions thereof are valuable assets of Midea Group and/or its affiliates (“Midea”), to which Midea owns trademarks, copyrights and other intellectual property rights, and all good will derived from using any part of an Midea trademark. Use of Midea trademark for commercial purposes without the prior written consent of Midea may constitute trademark infringement or unfair competition in violation of relevant laws.

This manual is created by Midea and Midea reserves all copyrights thereof. No entity or individual may use, duplicate, modify, distribute in whole or in part this manual, or bundle or sell with other products without the prior written consent of Midea.

All the described functions and instructions were up to date at the time of printing this manual. However, the actual product may vary due to improved functions and designs.

DISPOSAL AND RECYCLING

Important Instructions for Environment

Compliance with the WEEE Directive and Disposing of the Waster Product:
This product complies with EU WEEE Directive (2012/19/EU). This product bears a classification symbol for waster electrical and electronic equipment (WEEE).

This symbol indicates that this product shall not be disposed with other household wastes at the end of its service life. Used device must be returned to offcial collection point for recycling of electrical electronic devices. To find these collection systems please contact to your local authorities or retailer where the product was purchased. Each household performs important role in recovering and recycling of old appliance. Appropriate disposal of used appliance helps prevent potential negative consequences for the environment and human health.

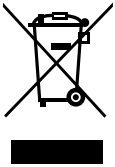

Compliance with RoHS Directive

The product you have purchased complies with EU RoHS Directive (2011/65/EU). It does not contain harmful and prohibited materials specified in the Directive.

Package Information

Packaging materials of the product are manufactured from recyclable materials in accordance with our National Environment Regulations. Do not dispose of the packaging materials together with the domestic or other wastes. Take them to the packaging material collection points designated by the local authorities.

DATA PROTECTION NOTICE

For the provision of the services agreed with the customer,
we agree to comply without restriction with all stipulations of applicable data protection law, in line with agreed countries within which services to the customer will be delivered, as well as, where applicable, the EU General Data Protection Regulation (GDPR).

Generally, our data processing is to fulfil our obligation under contract with you and for product safety reasons, to safeguard your rights in connection with warranty and product registration questions. In some cases, but only if appropriate data protection is ensured, personal data might be transferred to recipients located outside of the European Economic Area.

Further information are provided on request. You can contact our Data Protection Officer via **MideaDPO@midea.com.** To exercise your rights such as right to object your personal date being processed for direct marketing purposes, please contact us via **MideaDPO@midea.com.** To find further information, please follow the QR Code.

WARRANTY CARD

NOTES

We provide a guarantee for this appliance in accordance with the following conditions: You have a manufacturer's warranty of _____ years from the date of purchase (proof of purchase must be provided). Our General Terms and Conditions apply.

Your device / serial number

Purchase date:

Place of purchase:

Do you have any questions ?

We are happy to support you !

http://www.midea.com

Customer Service

For repairs, especially those involving electrical or mechanically complex components, it is recommended to consult a qualified repair service (e.g., a professional repairer, certified dealer or an authorized customer service center). Spare parts and information on repair and maintenance may be intended for professional repair services only.
Spare parts for your appliance are available for a minimum of 10 years following EU COMMISSION REGULATION 2019/2023 ANNEX II Ecodesign requirements.

In case of questions, please contact our local customer service center.

⚠ WARNING OF ELECTRICAL VOLTAGE

Risk of electric shock

- Never try to repair an appliance which is defective or presumed to defective. You may put your own and future users' lives in danger.
- Improper repair will void the warranty and subsequent damages can't be recognized!

EU Declaration of Conformity

We Wuxi Little Swan Electric Co., Ltd.

Address No.18, Changjiang South Road, Wuxi, Jiangsu, P.R.China

declare under our sole responsibility that the product

Product Name	:	**Washing Machine**
Model name	:	**MF205W90BA50W**
Software	:	**059034052504_010201**
Accessories	:	**N/A**

comply with the following directives and regulations:

2014/53/EU (The Radio Equipment Directive)

For the evaluation of the compliance with these Directives and Regulations, the following standards/requirements were applied:

Safety Article3.1(a)	EN 60335-1:2012 + A11 + A13 + A1+ A14+A2+A15+A16 EN 60335-2-7:2023+A11
EMC Article3.1(b)	EN 301 489-1 V2.2.3:2019 EN 301 489-17 V3.3.1:2024 EN IEC 55014-1:2021 EN IEC 55014-2:2021 EN IEC 61000-3-2:2019+A1+A2 EN 61000-3-3:2013 + A1 + A2
Radio Article3.2	EN 300 328 V 2.2.2:2019
Health Article3.1(a)	EN 62233:2008 EN62479: 2010 EN IEC 62311:2020
Article3.3(d)	EN 18031-1:2024

Responsible for making this declaration is the:

☑ Manufacturer ☐ Authorised representative established within the EU

Person responsible for making this declaration

Print name/Title: Libing Fan/Certification engineer

Fan Libing

Wuxi, China (Place) 2025.06.30 (Date) (Signature)

Midea

make yourself at home

V1.0

xxx