EN

LUBA 3 AWD Series

USER MANUAL

Original Instructions Version 4.0

08/2026

MAMMOTION

This manual is copyrighted by Mammotion company. Without the prior written permission of Mammotion, no company or individual shall copy, modify, reproduce, transcribe, or transmit this manual in any form or by any means. This manual is subject to change without notice at any time.

Unless explicitly stated otherwise, this manual is provided for informational purposes only, and all statements and information contained herein do not constitute a warranty of any kind.

Intended Use

Mammotion robots are designed for residential lawn care and are not intended for commercial use.

Revision Log

Date	Version	Description
01/2026	V1.0	Initial version
04/2026	V2.0	1. Updated Chapter 3.1 2. Updated Chapter 5.1 3. Updated Chapter 6.2
06/2026	V3.0	1. Updated Chapter 2.1 2. Updated Chapter 9
08/2026	V4.0	1. Updated Chapter 1 2. Updated Chapter 3 3. Updated Chapter 5 4. Updated Chapter 9

CONTENTS

1 Safety Instructions ..... - 1 -
1.1 General Safety Instructions ..... - 1 -
1.2 Charging Station Safety Instructions ..... - 2 -
1.3 Mowing Safety Instructions ..... - 2 -
1.4 Battery Safety Instructions ..... - 3 -
2 Introduction ..... - 4 -
2.1 LUBA 3 AWD Configuration ..... - 4 -
2.2 Product Overview ..... - 5 -
2.3 Product Symbols ..... - 10 -
3 Getting Started ..... - 12 -
3.1 Assembling the Robot ..... - 12 -
3.2 Installing the Charging Station ..... - 14 -
3.3 Installing the RTK Reference Station ..... - 17 -
3.4 Downloading the Mammotion App ..... - 20 -
3.5 Setting Up Your Product ..... - 21 -
3.6 Pre-Mowing Preparations ..... - 21 -
3.7 Mapping and Mowing Your Lawn ..... - 23 -
3.8 Recharging ..... - 24 -
4 Daily Mowing ..... - 25 -
4.1 DropMow ..... - 25 -
4.2 Regular Task (Custom Settings) ..... - 26 -
4.3 Scheduled Task ..... - 27 -
5 Mammotion App ..... - 28 -
5.1 Map Elements ..... - 28 -
5.2 Mowing Settings ..... - 30 -
5.3 Safety & Protection ..... - 31 -
5.4 Security & Tracking ..... - 31 -
5.5 Positioning ..... - 32 -
5.6 Upload Logs ..... - 33 -

5.7 Update Firmware ..... - 33 -
6 Maintenance ..... - 34 -
6.1 Cleaning ..... - 34 -
6.2 Cutting Blades Maintenance ..... - 36 -
6.3 Battery Maintenance ..... - 38 -
6.4 Storage ..... - 38 -
7 Transportation and Moving ..... - 40 -
8 Disposal ..... - 41 -
9 Product Specifications ..... - 43 -
9.1 Technical Specifications ..... - 43 -
9.2 Operating Bands Specifications (For EU Models) ..... - 47 -
9.3 Battery Specifications ..... - 49 -
10 Warranty ..... - 50 -

1 Safety Instructions

IMPORTANT

READ CAREFULLY BEFORE USE
KEEP THIS GUIDE FOR FUTURE REFERENCE

1.1 General Safety Instructions

1. Read and understand all instructions carefully before using the robot.

2. Only use parts and accessories recommended by Mammotion with the robot.

3. Never allow children, persons with reduced physical, sensory or mental capabilities or lack of experience and knowledge, or people unfamiliar with these instructions to use the robot. Local restrictions may restrict the age of the operator.

4. DO NOT allow children to be in the vicinity or play with the robot while it is operating.

5. DO NOT use the robot in areas where people are unaware of its presence.

6. When manually controlling the robot via the Mammotion app, always walk—never run. Be cautious on slopes and maintain proper footing and balance.

7. Only individuals who are legally considered adults in their state of residence are recommended to use the robot.

8. DO NOT touch moving parts, such as the cutting disc, until all motion has completely stopped.

9. If operating the robot in public areas, place warning signs around the task area with the following text: "Warning! Automatic lawn mower! Keep away from the robot! Supervise children!"

10. DO NOT leave the robot operating unattended if there are pets, children or people in the vicinity.

11. Wear sturdy footwear and long trousers when operating the robot.

12. To prevent damage to the robot and accidents involving vehicles and individuals, do not set task areas or channels across public pathways.

13. DO NOT connect or touch a damaged cable until it is disconnected from the power outlet. If the cable becomes damaged during operation, disconnect the plug from the power outlet. A worn or damaged cable increases the risk of electrical shock and should be replaced by authorized service personnel.

14. Keep extension cords away from moving hazardous parts, such as cutting blades, to avoid damage to the cords and robot.

15. DO NOT modify the robot by yourself. Modifications could interfere with robot operations, result in serious injury and/or damage, or void the warranty. Use only Mammotion-approved parts and accessories.

16. If the robot makes an abnormal sound or signals an alarm, press the STOP button immediately.

17. Regularly check that all parts of the robot can function normally.

18. This robot is not a toy. Do not allow children to ride, sit on, or play with the robot.

1.2 Charging Station Safety Instructions

1. DO NOT set up the charging station in areas where people may trip over it.

2. DO NOT set up the charging station in areas where there is a risk of standing water.

3. Only use the official charging station to charge the robot. Incorrect use may result in electric shock, overheating, or corrosive liquid leakage from the battery. In case of electrolyte leakage, flush with water or a neutralizing agent and seek medical aid if the corrosive liquid comes into contact with your eyes.

4. Keep the charging station and accessories at least 60 cm (24 in) away from combustible materials. Malfunctions or overheating can pose a fire risk.

5. For USA/Canada users: If installing the power supply outdoors, use a covered Class A GFCI receptacle (RCD) with a weatherproof enclosure. There is a risk of electric shock if improperly installed.

1.3 Mowing Safety Instructions

1. Keep hands and feet away from the cutting blades. DO NOT reach under or touch the robot while it is powered on.

2. DO NOT lift or move the robot when it is turned on.

3. Remove stones, branches, tools, toys, or other objects from the lawn before operation to prevent blade damage.

4. DO NOT put objects on top of the robot and charging station.

5. DO NOT use the robot if the STOP button is not functioning.

6. Avoid collisions with people or animals. Stop the robot immediately if someone or something enters its path.

7. Always turn off the robot when it is not in use.

8. DO NOT use the robot simultaneously with pop-up sprinklers and avoid setting a channel where sprinklers are installed.

9. DO NOT operate the robot in standing water or during heavy rain.
10. The robot may start automatically according to the mowing schedule. Keep children, pets, and body parts away from the robot at all times.

1.4 Battery Safety Instructions

Lithium-ion batteries can explode or catch fire if mishandled. Avoid disassembly, short circuits, exposure to water, fire, or high temperatures. Handle with care and avoid all mechanical or electrical abuse. Store batteries out of direct sunlight.

1. Only use the official charging station and power supply. Incompatible chargers may cause electric shock or overheating.
2. DO NOT attempt to repair or modify the batteries. Repair attempts may result in serious injury due to explosion or electrical shock. If a leak develops, released electrolytes are corrosive and toxic.
3. The robot contains batteries that should only be replaced by authorized service personnel.

2 Introduction

2.1 LUBA 3 AWD Configuration

The LUBA 3 AWD is available in the following configurations:

<table>
<tr><th>Product</th><th>Configuration</th></tr>
<tr><td>LUBA 3 AWD 1500</td><td rowspan="2">● Robot
● Charging Station</td></tr>
<tr><td>LUBA 3 AWD 1500H</td></tr>
<tr><td>LUBA 3 AWD 3000</td><td rowspan="6">EU and UK models:
● Robot
● Charging Station
AU and NA models:
● Robot
● Charging Station
● RTK Reference Station</td></tr>
<tr><td>LUBA 3 AWD 3000H</td></tr>
<tr><td>LUBA 3 AWD 5000</td></tr>
<tr><td>LUBA 3 AWD 5000H</td></tr>
<tr><td>LUBA 3 AWD 10000</td></tr>
<tr><td>LUBA 3 AWD 10000H</td></tr>
</table>

2.2 Product Overview

Top View

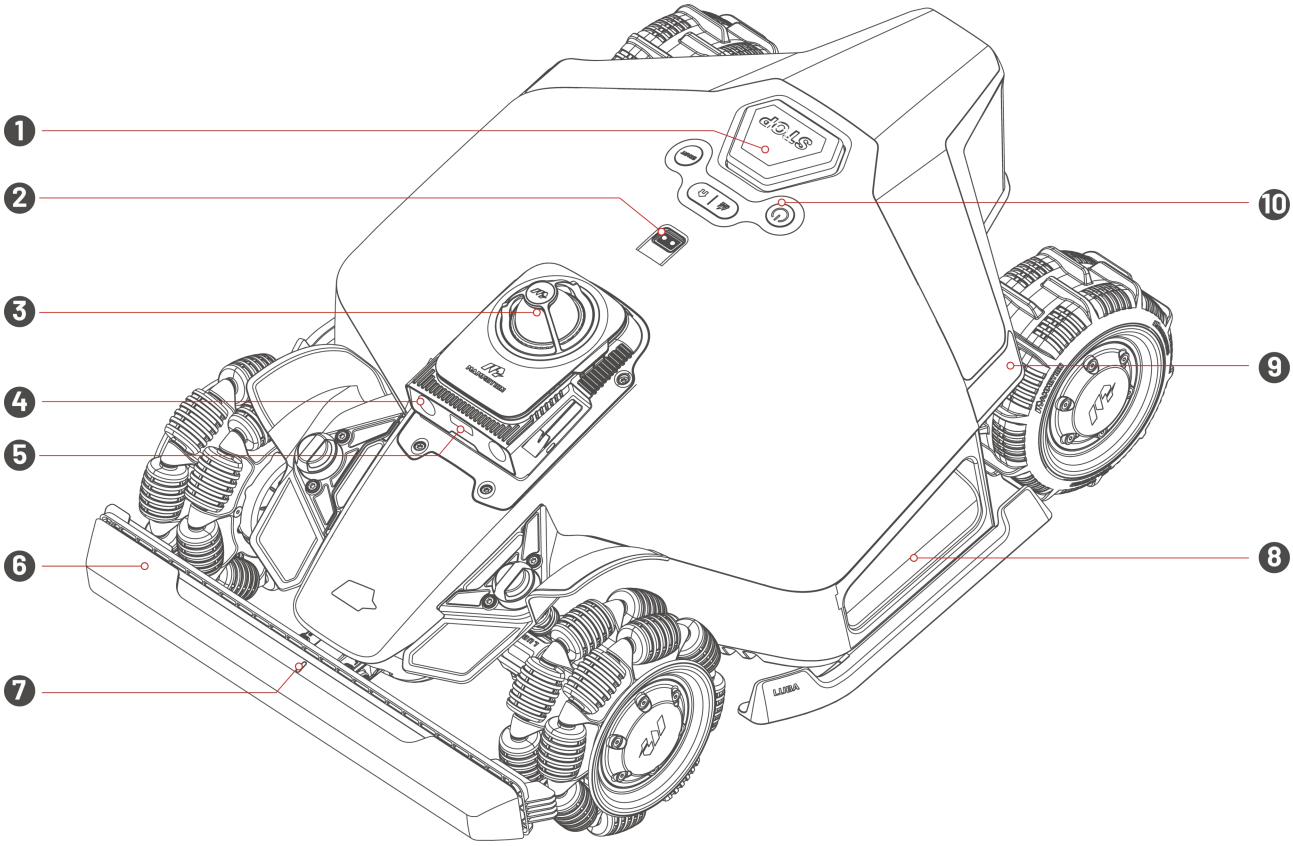

1. STOP Button
2. Rain Sensor
3. 360° LiDAR Module
4. Vision Module
5. Supplemental Light
6. Bumper
7. Front Indicator
8. Handle
9. Side LED
10. Controls

Controls

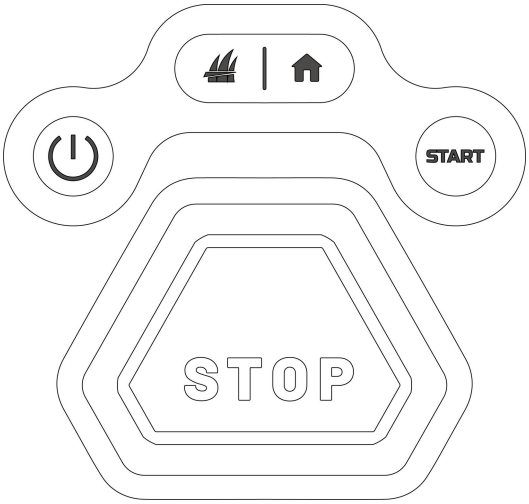

Button	Description
	Long press to turn on/off the robot.
	Double-press to fully lower the cutting disc for cleaning.
START	Double-press to unlock only the robot after an emergency stop.
STOP	Press to stop in an emergency.
> START	• Press in sequence to continue working. • Press and hold for 5s, then press START to activate DropMow. See ***4.1 DropMow*** for more information.
> START	Press in sequence to send the robot to the charging station.

Bottom View

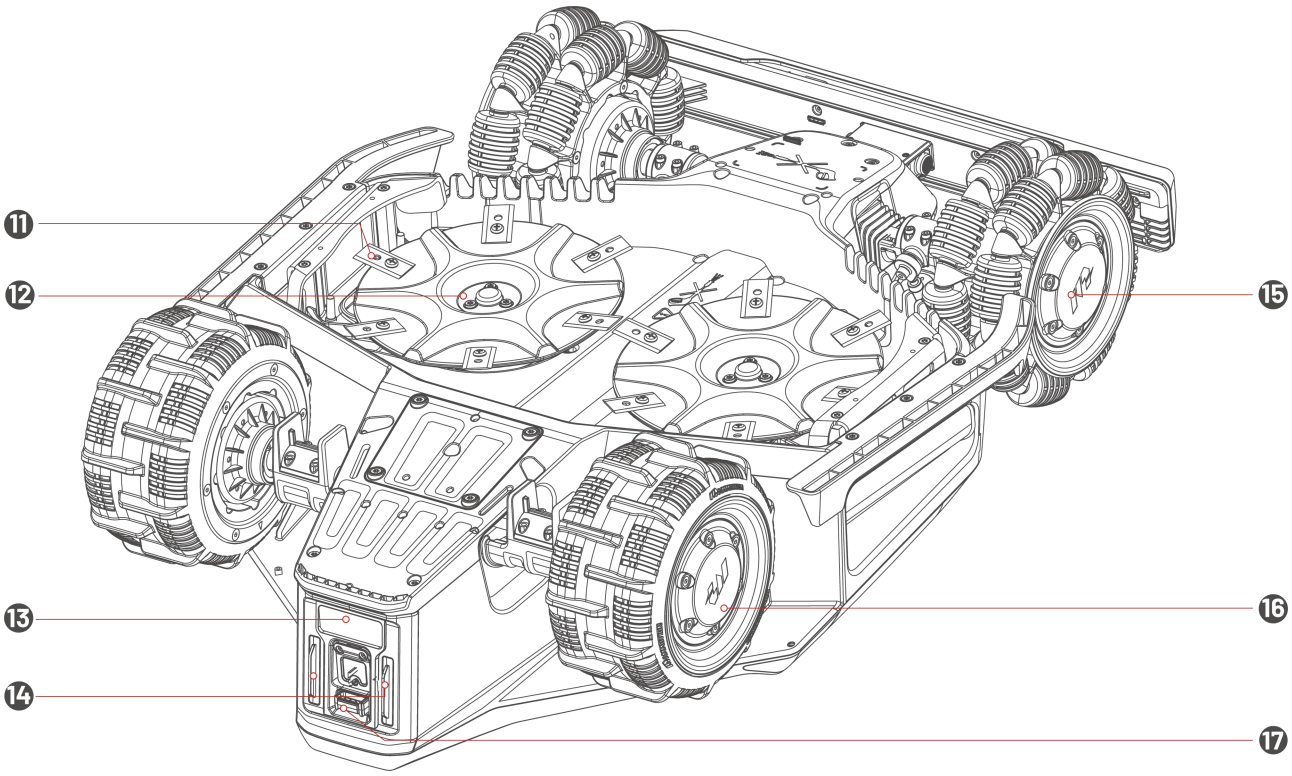

11. Cutting Blade

12. Cutting Disc

13. Infrared Receiver

14. Charging Pad

15. Omni Wheel

16. Rear Wheel

17. Security Key

Charging Station and RTK Reference Station

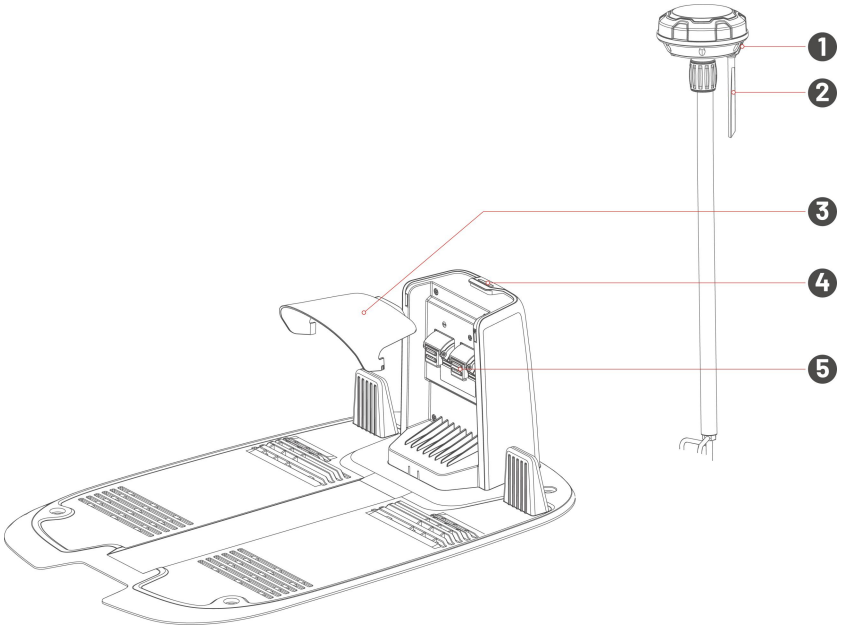

1. RTK Reference Station LED

2. Radio Antenna

3. Rain Shade

4. Charging Station LED

5. Charging Contact

LED Indicators Codes

Robot

Indicator	Color	Description
Side LED	Solid red	The robot is functioning properly.
	Pulsing red	● OTA update in progress. ● The robot is charging.
	Slow blinking red	● STOP button activated. ● Low battery. ● The robot is stuck. ● Security key not properly installed. ● The robot has been lifted, tilted, or flipped over.
	Fast blinking red	● Robot system malfunction. ● Robot system update failed.
	Off	● The robot is turned off. ● The robot is sleeping. ● The side LED is turned off in the app. ● The robot is in manual control mode but is currently inactive.

Charging Station

Indicator	Color	Description
LED	Blinking green	The robot is docked in the charging station.
	Solid green	The robot is not in the charging station.
	Solid red	Charging station malfunction.
	Off	No power supply.

RTK Reference Station

Indicator	Color	Description
LED	Blinking blue	The RTK reference station is being updated.
	Blinking green	The RTK reference station is initializing.
	Solid green	The positioning mode is set to Antenna over Datalink and is functioning well.
	Solid blue	The positioning mode is set to Antenna over Internet and is functioning well.
	Off	● The local time is between 18:00 and 8:00. ● No power supply.
	Solid red	RTK reference station malfunction.

2.3 Product Symbols

Please study these symbols found on the product and understand their meaning:

TS-A210-2807501 E210-1C280750M6	Use the detachable supply unit TS-A210-2807501 / E210-1C280750M6.
TS-A012-1201002	Use the detachable supply unit TS-A012-1201002.
CE	This product complies with the applicable EU Directives.
Made in China	This product is manufactured in China.
	It is not permitted to dispose of this product as normal household waste. Ensure that the product is recycled in accordance with local legal requirements.
	This product can be recycled.

	Keep this product's packaging dry.
	DO NOT cover this product's packaging.
	DO NOT flip this product's packaging.
	This product is fragile.
	DO NOT step on this product or its packaging.
	Class III appliance.
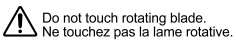	WARNING — DO NOT touch rotating blade.
	WARNING — Read user instructions before operating the machine.
	WARNING — Keep a safe distance from the machine when operating.
	WARNING — Remove the disabling device before working on or lifting the machine.
	WARNING — DO NOT ride on the machine.

3 Getting Started

3.1 Assembling the Robot

1. Gently pull the plug out from the front of the robot and connect it to the bumper.
2. Orient the bumper so the front indicator faces upward and align the tabs with the slots.
3. Press the bumper firmly inward until you hear an audible "click," confirming it is fully seated.
4. Use the included Phillips-bit screwdriver to install and tighten the two screws.

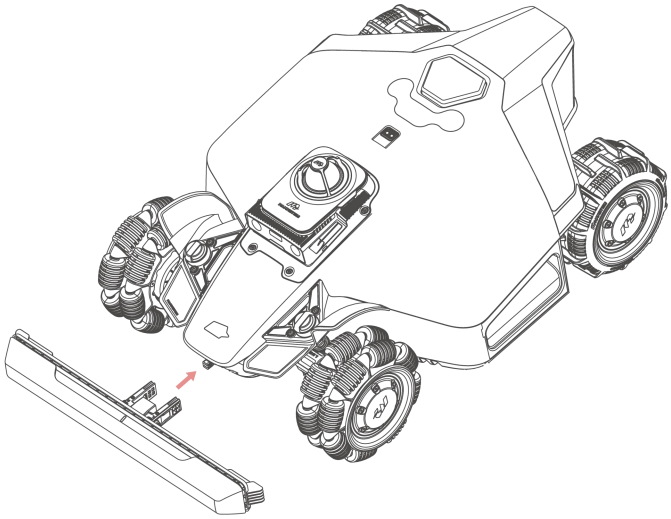

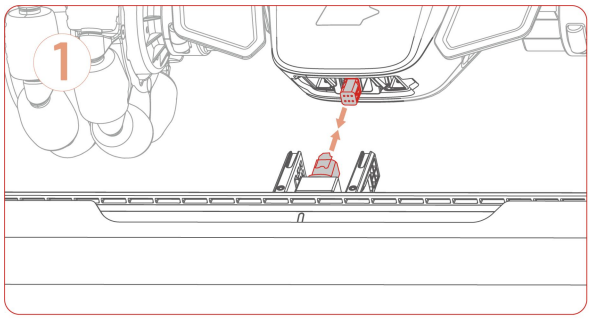

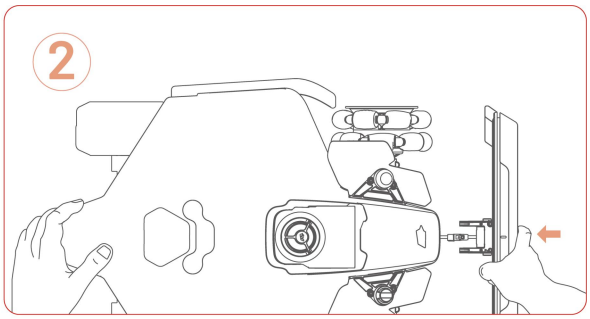

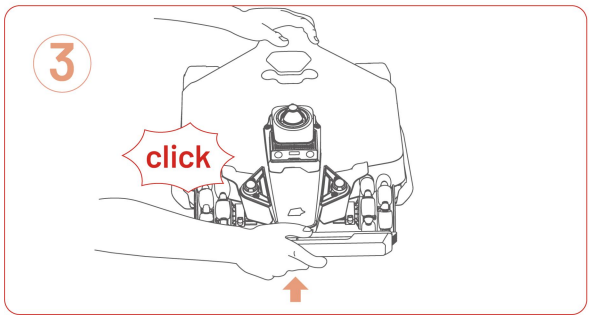

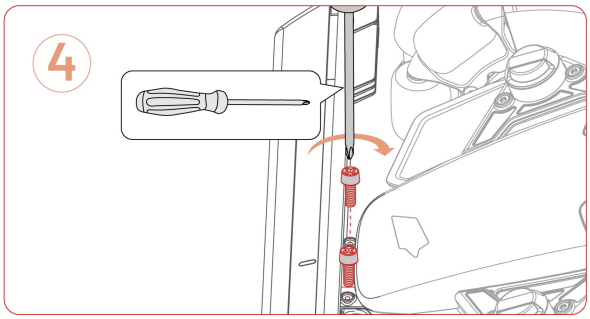

5. Place the robot upside down on a soft, clean surface, taking care not to damage the LiDAR module, and install the side bumpers. Tighten the screws using the included hex-bit screwdriver.

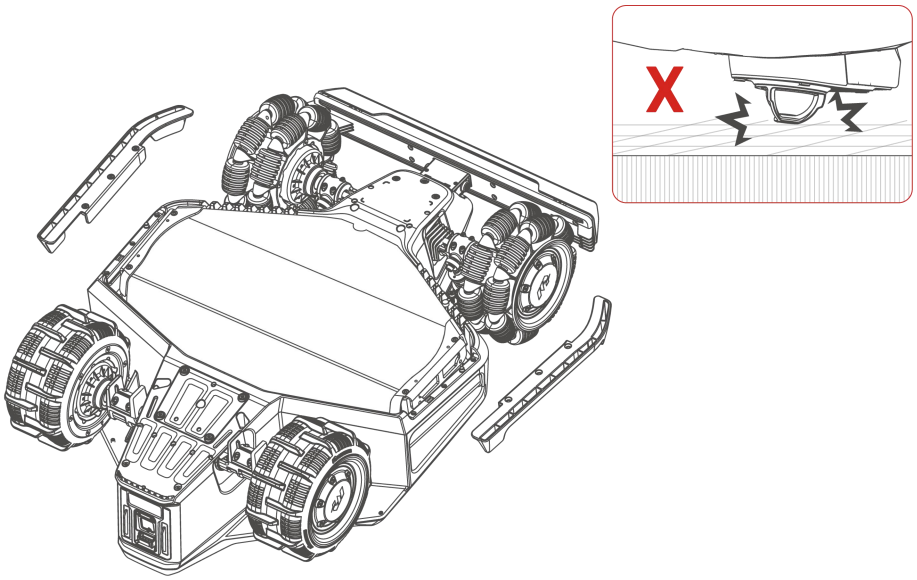

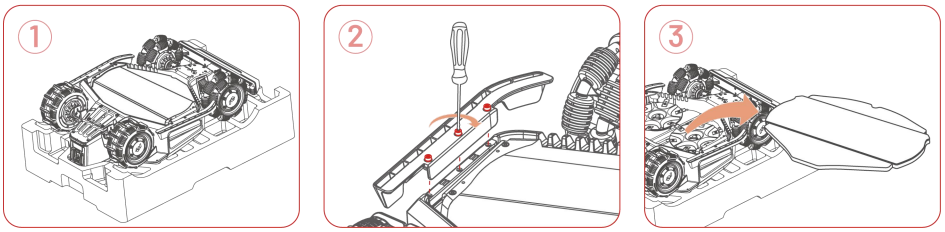

6. Insert the security key into the rear key slot.

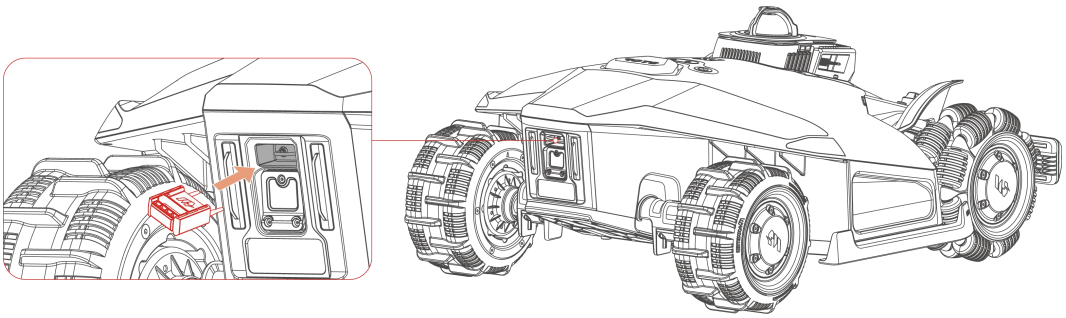

3.2 Installing the Charging Station

Choosing a Location for Charging Station

The charging station is where your robot docks and recharges. To ensure smooth operation, ensure the installation area meets the following conditions:

- **Flat surface:** The area should be free from significant bumps, slopes, or rocks.
- **Nearby power source:** An accessible power outlet is required for powering the charging station.
- **Clear surroundings:** There should be no obstacles (like trees or houses) within 1.5 m (4.9 ft) to the left, right, and front of the charging station.
- **Close to the lawn perimeter**: Install the charging station close to the lawn perimeter for accurate positioning. If you have more than one lawn, it is recommended to place the charging station between them for optimal performance.

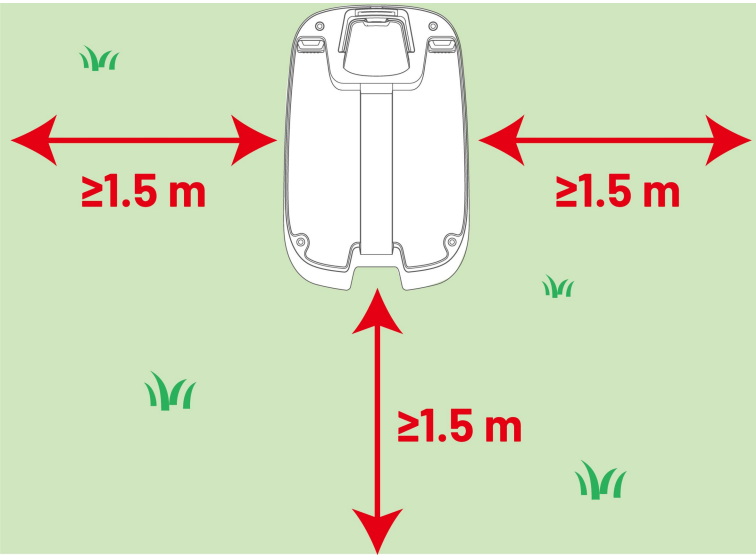

Assembling Charging Station

1. Attach the rain shade.

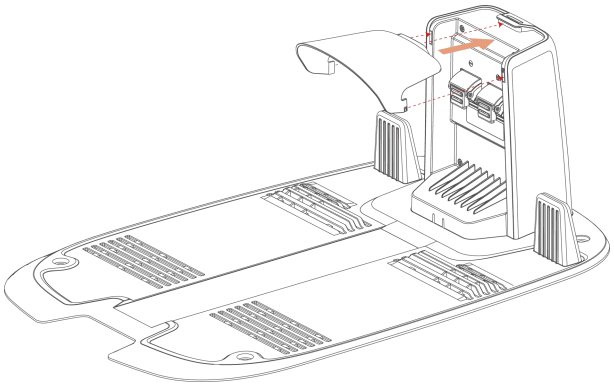

2. Use the included four stakes to secure the charging station to the chosen location. Make sure the charging station is facing the lawn.

> **NOTE**
>
> If the charging station is installed on a concrete surface, please secure it with expansion bolts (not included).

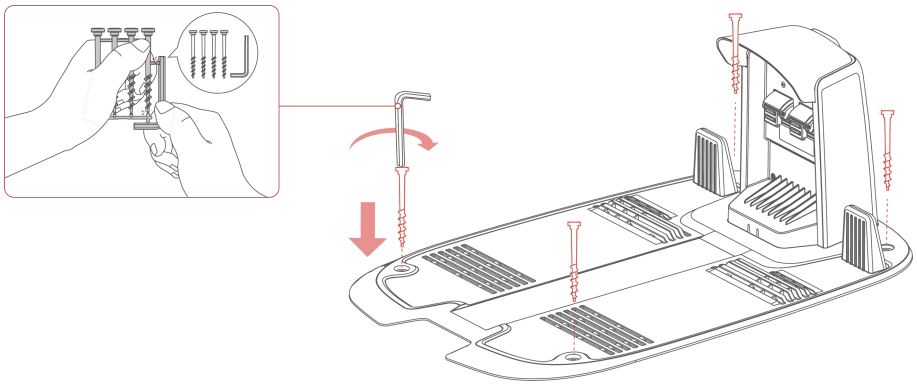

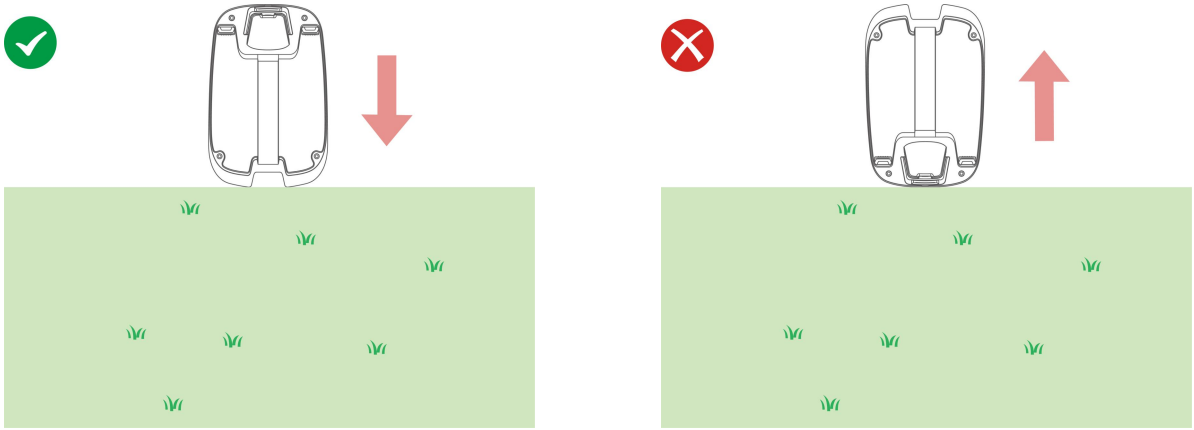

3. Connect the charging station cable (the longer one) to the charging station power supply.
4. Plug the charging station power supply into the power outlet. Secure the cable with the included cable pegs.
5. Dock the robot on the charging station to begin charging. The side LED will turn red when the robot is properly docked.

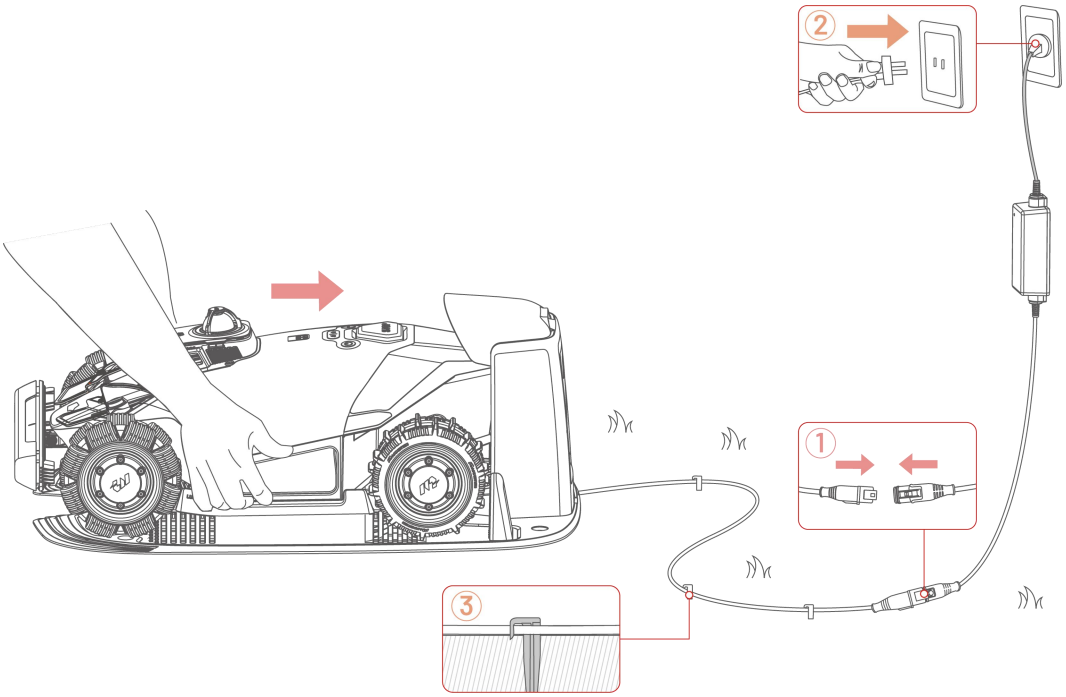

NOTE

Charge the robot for initial use to activate it.

3.3 Installing the RTK Reference Station

Choosing a Location for RTK Reference Station

The RTK reference station provides high-precision positioning for the robot. It receives satellite signals and transmits real-time correction data to the robot. To ensure smooth operation, ensure the installation area meets the following conditions:

- **Open area:** The area should have a clear view of the sky.
- **Nearby power source:** An accessible power outlet is required.
- **Strong Wi-Fi signal:** 2.4 GHz network is supported.
- **Clear surroundings:** Maintain a distance of at least 3 m (10 ft) between the RTK reference station and any wall or tree.

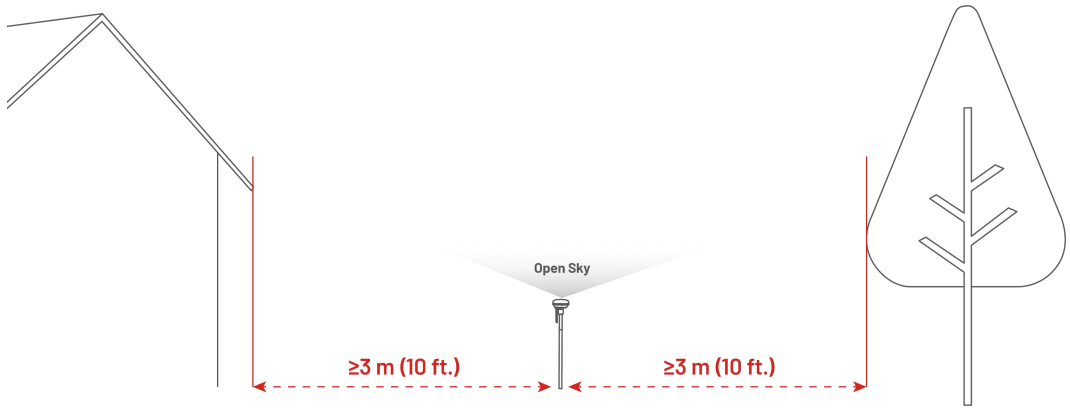

Assembling the RTK Reference Station

1. Connect the two mounting poles and the trident stake.

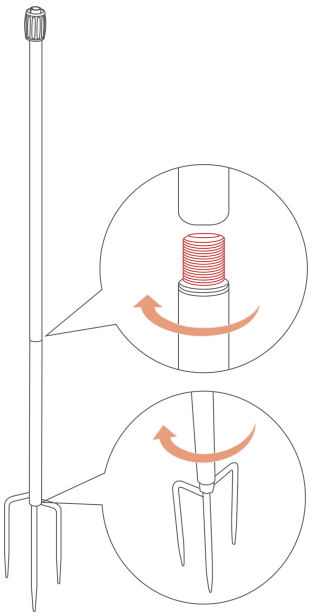

2. Attach the radio antenna to the RTK reference station.

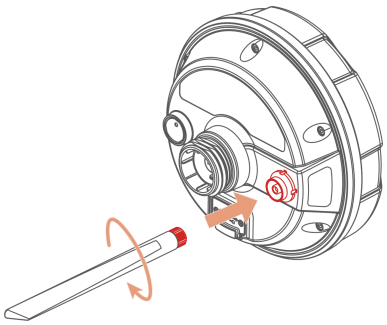

3. Route the RTK reference station cable through the mounting pole.

4. Mount the RTK reference station on the mounting pole.

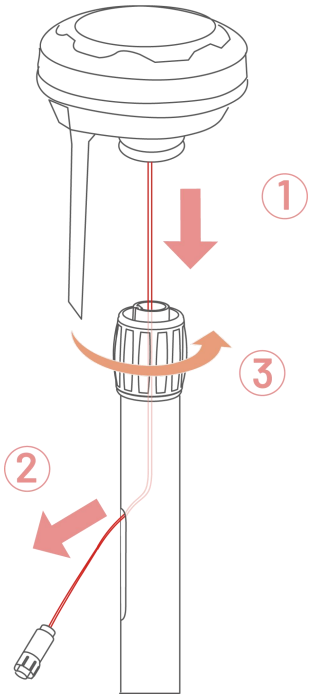

5. Securely install the RTK reference station near the charging station.

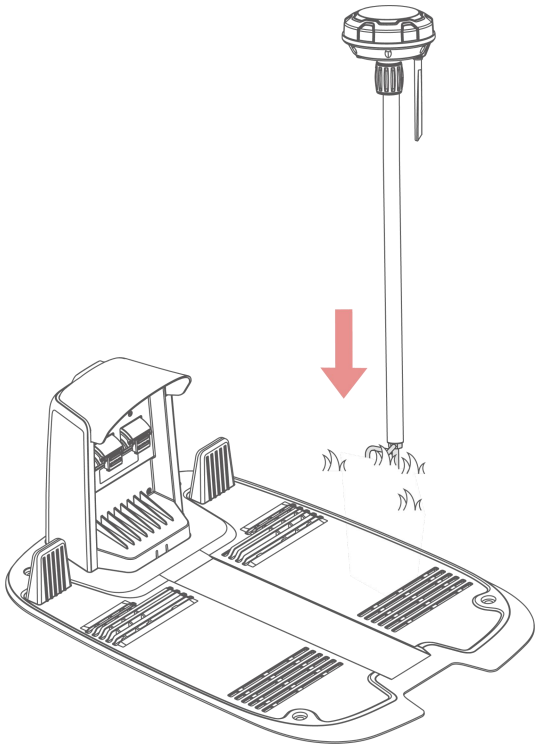

6. Connect the RTK reference station cable to the charging station cable (the shorter one).
7. Use the cord tie and cable peg to neatly secure the cables in place.

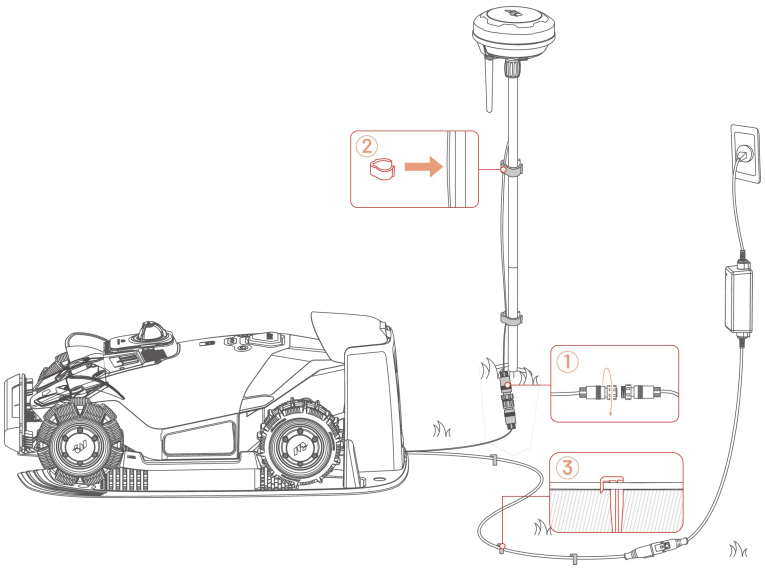

3.4 Downloading the Mammotion App

Scan the QR code to download the Mammotion app from the Android or Apple app stores, or search for Mammotion in these stores.

After installing the app, sign up and log in. During use, the app may ask you for Bluetooth, Location, and local network access. For optimal use, it is recommended to allow the above permissions. For more information, please refer to our Privacy Agreement. Go to Mammotion app > > **About Mammotion** > **Privacy Agreement**.

If you want to log in with a third-party account, tap or on the login page to continue. The app now supports logging in with Google and Apple accounts.

Trademark Notice:

The icon " " is the trademark of Google LLC. The icon " " is the trademark of Apple Inc. All trademarks mentioned in this manual are the property of their respective owners.

3.5 Setting Up Your Product

NOTE

Maintain a distance of 3 m (10 ft) or less between your phone and the robot.

1. Tap **+** to add your robot and/or RTK reference station.
2. Follow the onscreen instructions to connect link your product and connect to your Wi-Fi.

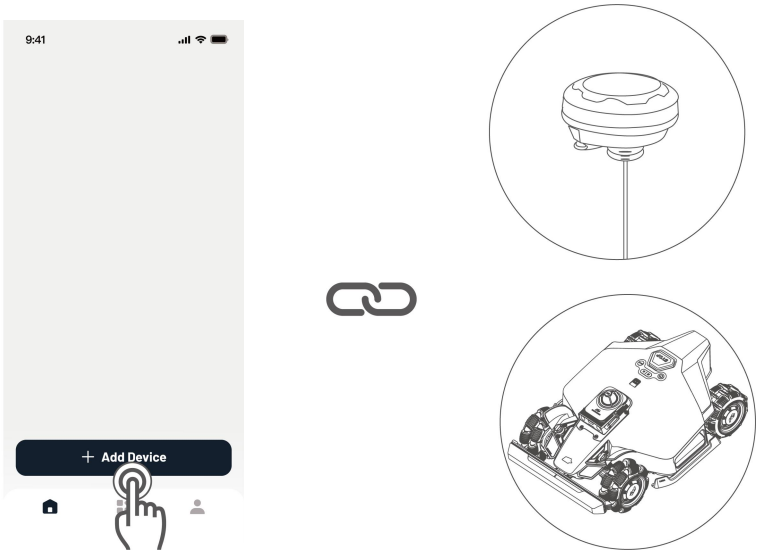

3.6 Pre-Mowing Preparations

- Remove debris, piles of leaves, toys, wires, stones, and other objects from the lawn.
- Make sure no children or animals are on the lawn.

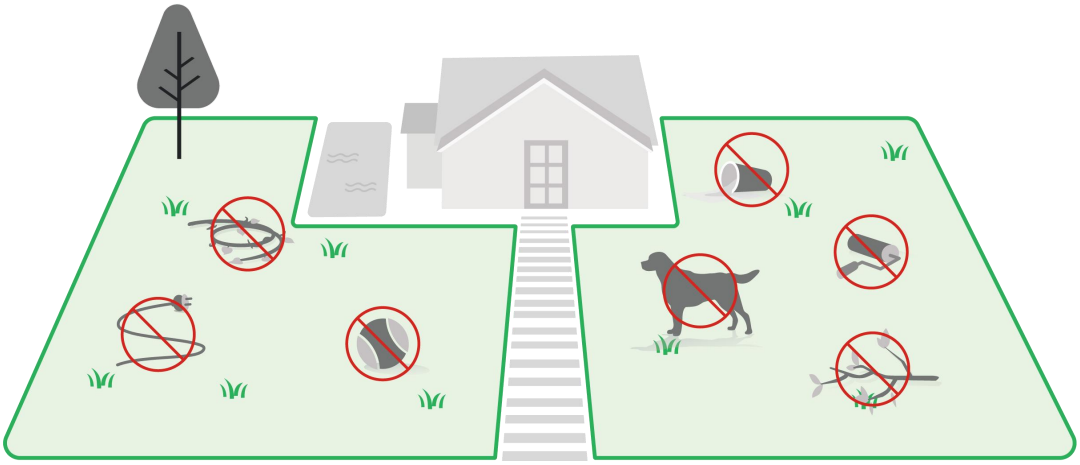

- Ensure the robot is properly docked on the charging station and that the side LED is red. Then, complete calibration in the app.

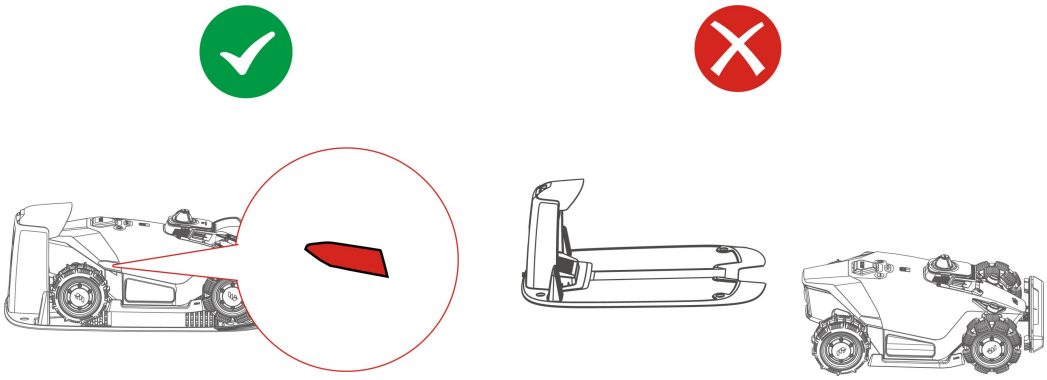

- For the best mowing results, it is recommended to mow in dry weather. Mowing in the rain can make the grass stick on the robot and cause slipping. DO NOT mow in bad weather, such as heavy rain, thunderstorms or snow.

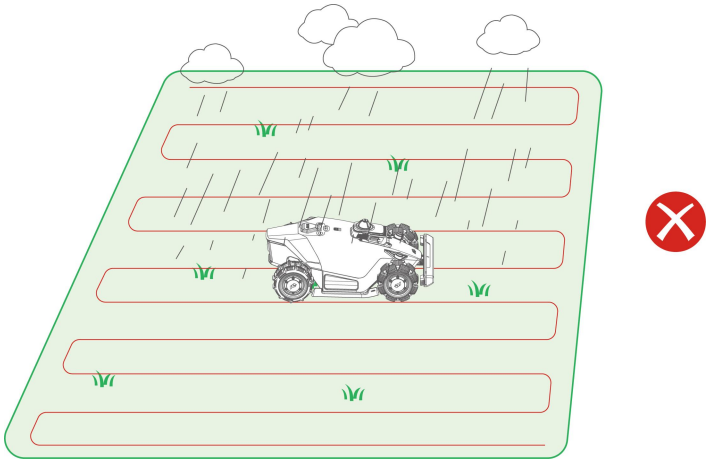

3.7 Mapping and Mowing Your Lawn

1. Tap **Start Mapping** on the Home page.
2. Read and follow the in-app instructions to verify your robot is ready to map.
3. Tap **Start Mapping** to create a map of your lawn.
4. Tap **Mow** to start mowing after completing mapping.

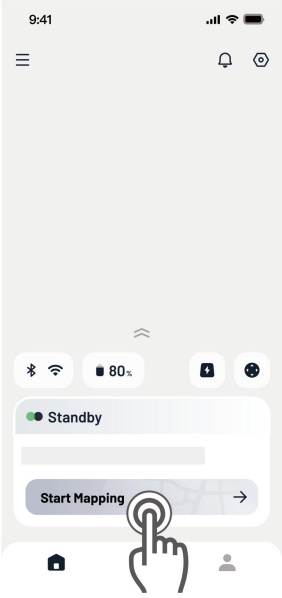

Do not move the RTK reference station after the map is created or the task area will become inaccurate. In the event of an RTK reference station relocation, reinstall it in its original position, or go to > **Map Settings** > **Delete Map** to delete the current map and then remap the lawn again.

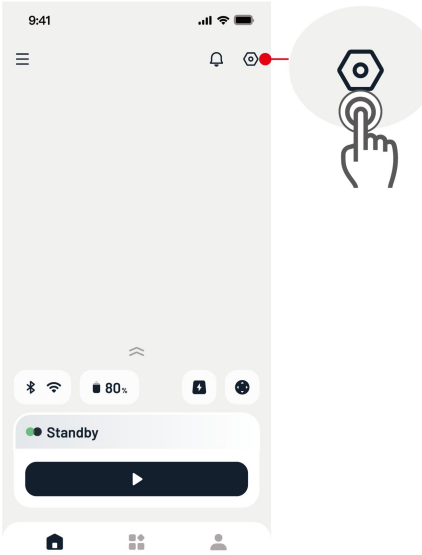

3.8 Recharging

NOTE

The robot must be in a task area to go to recharge.

To Recharge

- Tap on the Map page in the Mammotion app.

OR

- Press the button on the robot, then press START to guide robot to the charging station.

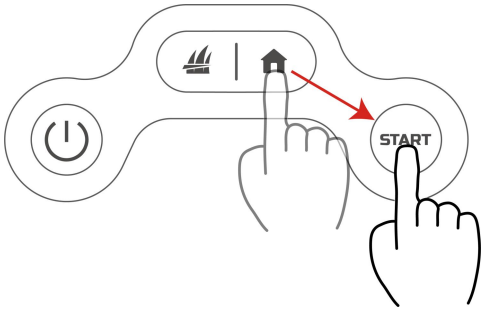

4 Daily Mowing

4.1 DropMow

DropMow is used for one-off mowing of unmapped lawns or for touch-up mowing outside of mapped areas.

Recommended uses include:

- Mowing areas that the robot cannot normally reach.
- Temporary mowing tasks that don't require a full map.

To use DropMow:

- Tap ⚙ > **Beta Features** > **DropMow** through the app.

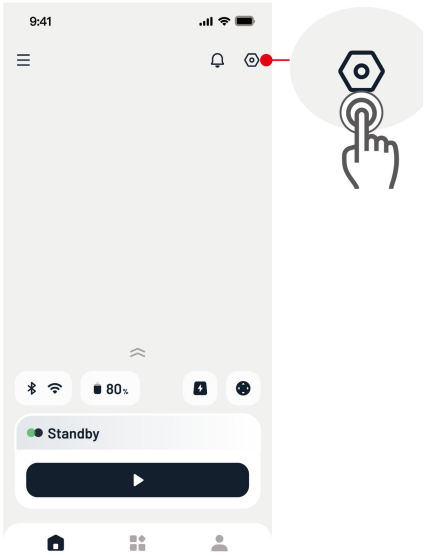

OR

- Press and hold for 5 s, then press START on the robot.

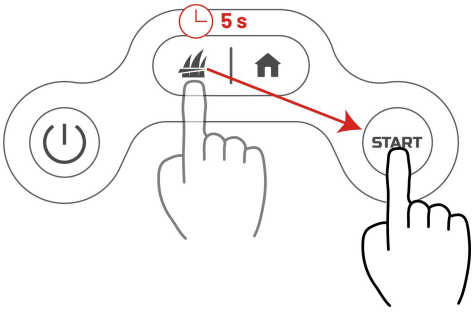

4.2 Regular Task (Custom Settings)

To Customize your Mowing Task:

1. Tap the robot image to access the Map page.
2. Tap ▶ to access the task page.
3. On the map, tap the area you want to mow.
4. Tap ⚙ to configure task settings and start mowing.

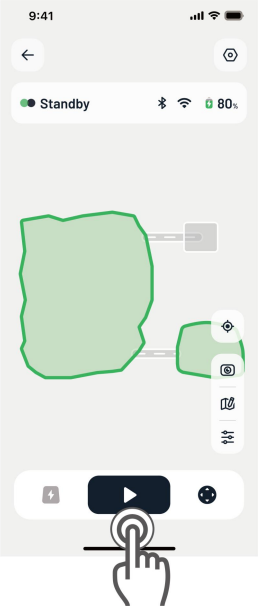

4.3 Scheduled Task

NOTE

- Scheduled tasks cannot be created while the robot is working.
- Scheduled tasks can be set after a task area has been created.

To Schedule an Automatic Mowing Task:

1. On the Home page, swipe up and tap **Add Schedule** if no schedule has been created.
2. Tap **+** to create a new schedule.
3. Select the area to mow.
4. Configure the mowing parameters as needed.
5. Set the date and time, then save the schedule.

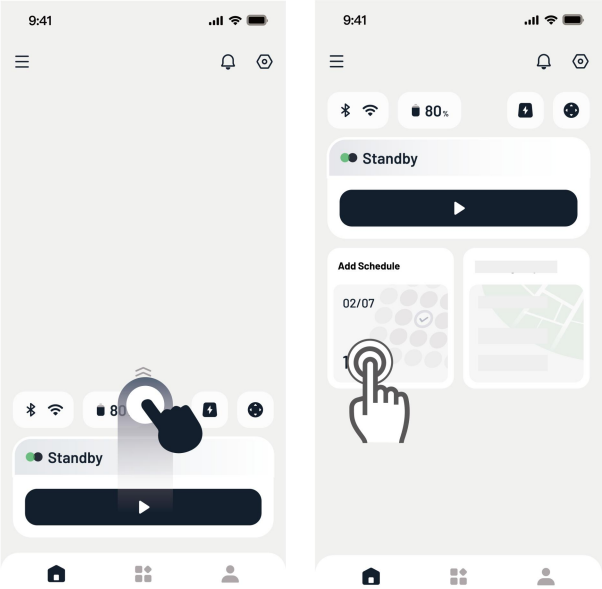

5 Mammotion App

With the Mammotion app, you can fully customize, manage, and monitor your robot, allowing you to control your mowing experience from anywhere.

5.1 Map Elements

Virtual Fence

A virtual fence acts as an invisible barrier, defining perimeters or restricting access to areas that you don't want the robot to go.

Recommended uses include:

- Lawns with unclear or undefined perimeters.
- Water features like pools or ponds.

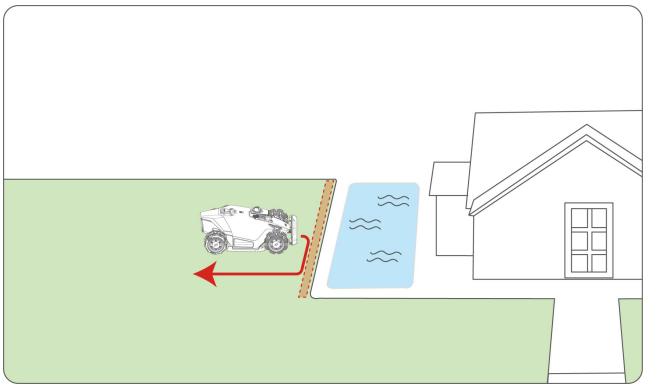

No-go Zone

A no-go zone is an area you want your robot to completely avoid. They are crucial for protecting your robot from damage and keeping it away from sensitive or hazardous areas. The robot will not mow within no-go zones.

Recommended uses include:

- Low flowerbeds, especially those lower than 20 cm (7.8 in).
- Water edges, such as ponds or swimming pools, especially where there is no clear boundary.
- Transparent objects, such as mosquito nets or glass doors.
- Small or low-lying obstacles, e.g., clotheslines, tent ropes, or water pipes.
- Pet houses.
- High-value or delicate plants, including crops and ornamental plants.

- Irrigation equipment, such as hoses and sprinklers.

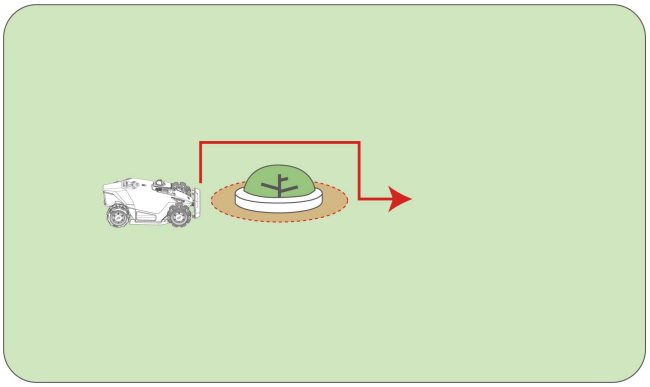

Obstacle-Free Zone

An obstacle-free zone is an area where the robot turns off its obstacle avoidance while going to a task area or another location, and when going to recharge. It is useful for complex, but safe areas where the robot may otherwise get stuck.

Recommended uses include:

- Lawn areas that may be mistakenly recognized as invalid due to seasonal changes.
- Areas with low, safe obstacles.

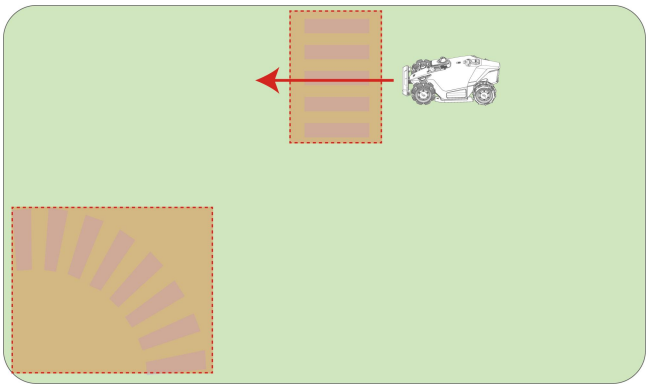

Adding a Virtual Fence / No-go Zone / Obstacle-Free Zone

1. Tap the robot image on the Home page to access the Map page.
2. Tap .
3. Tap **Map Editing**.
4. Select **Virtual Fence / No-go Zone / Obstacle-Free Zone** and follow the in-app instructions to finish adding.

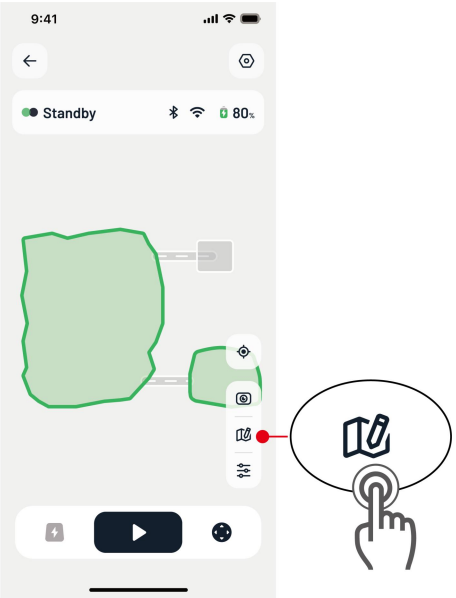

5.2 Mowing Settings

Mowing Pattern

Select the optimal mode based on your lawn's condition and desired look under > **Mowing Pattern**.

- **Perimeter Only:** Only mows the lawn edges.
- **Stripes:** Creates classic striped lines.
- **Grid:** Mows in a crisscross pattern for a dense, even finish.

Pattern

Add text or images to your map to personalize your lawn and express yourself. On the map, go to > **Map Editing** > **Pattern** to add a pattern.

5.3 Safety & Protection

Obstacle Detection

Adjust the robot's responsiveness to objects and varying terrain in its path. You can select one of three sensitivity levels under > **AI Obstacle Detection**:

- **Sensitive:** Increases the robot's sensitivity to both standard obstacles and non-grassy areas (e.g., pavement, gravel). Use this mode on complex lawns.
- **Standard:** Detects and avoids common obstacles (e.g., toys, furniture) encountered during mowing. This is the recommended default setting.
- **Off:** Disables obstacle detection. Use only in specific, controlled environments where detection is unnecessary or interferes with operation.

Rain Detection

Your robot is equipped with built-in rain sensors. When enabled, the robot will automatically stop mowing and return to the charging station when rain is detected.

- Enable this feature in > **Rain Protection**.

Wildlife Safety

This feature helps protect nocturnal animals during nighttime operation. You can set the robot to perform **Low-Speed Mowing** or **Stop Mowing** entirely during night hours.

- Enable this feature in > **Wildlife Safety**.

5.4 Security & Tracking

Geo-fence Alarm

The app will send you a push notification if the robot moves more than 50 m (164 ft) away from its designated task area, alerting you to potential unauthorized movement.

- To use, go to > **Find My Device** and enable **Location Notifications**.

GPS Theft Tracking

If your robot is missing, you can track its location in real-time via GPS, provided the robot was linked to the Mammotion app.

- To use, go to > **Find My Device** and enable **Location Recorder**.

5.5 Positioning

The robot uses a LiDAR module, vision module, and RTK reference station for positioning. With an RTK reference station, the robot has several positioning modes. To switch the positioning mode, go to ⬡ > **RTK / iNavi Positioning**.

Antenna over Datalink

The RTK reference station receives the satellite signal corrections and transmits them directly to the robot using a dedicated, low-latency LoRa signal. This mode offers the most stable, lowest latency, and fastest correction data communication.

Recommended uses: Lawns where there is a clear line of sight or minimal obstruction between the RTK reference station and the robot, and the robot is within the LoRa signal range.

Antenna over Internet

The RTK reference station receives the satellite signal corrections and sends them to the robot using the Internet. This mode extends the operational range.

Recommended uses:

- Large or complex lawns where the distance is too great for Antenna over Datalink.
- Lawns that have strong and stable Wi-Fi coverage for both the RTK reference station and the robot.

iNavi NetRTK

The robot receives the RTK corrections directly from a remote cloud service via a 4G network, eliminating the need for a local RTK reference station on your property.

Recommended uses: Lawns where there is no suitable locations to install an RTK reference station and are covered with stable 4G network.

5.6 Upload Logs

If you encounter any issues during use, you can upload the corresponding logs to help our technical support team diagnose and resolve the problem efficiently.

To Upload Logs:

1. Tap to enter the Settings page.
2. Tap **Upload Logs** and follow the in-app instructions to complete the upload.

Alternatively:

Go to > **Upload Logs**, and follow the in-app instructions to complete the upload.

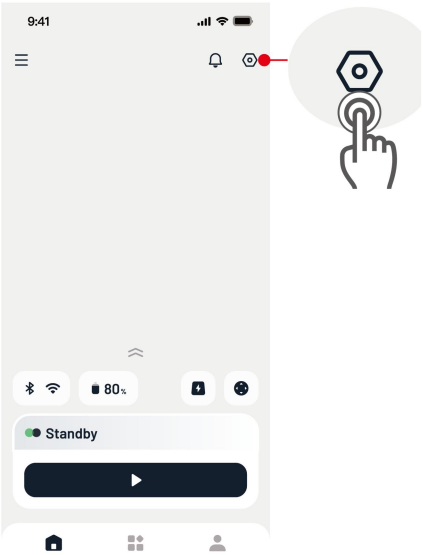

5.7 Update Firmware

For an optimal experience, ensure your robot and RTK reference station are updated to the latest firmware version.

To Update Firmware:

1. Go to > **Device Information** > **Robot Version** to update the firmware.
2. Ensure the robot is connected to a stable network.
3. During the update, please avoid exiting the app, performing other operations, or turning off the robot.

6 Maintenance

To maintain optimal mowing performance and extend the lifespan of your robot, Mammotion advises performing regular inspections and maintenance. For safety, always wear protective clothing such as trousers and work shoes; avoid wearing open sandals or going barefoot during maintenance.

- DO NOT use a high-pressure washer or solvents to clean the robot.
- After washing, ensure that the robot is placed on the ground in its normal orientation, not upside down.
- DO NOT reverse the robot to wash the chassis. If you do reverse it for cleaning purposes, make sure to return it to its proper orientation afterward. This precaution is necessary to prevent water from leaking into the motor and potentially affecting normal operation.

6.1 Cleaning

Robot

WARNING

- Ensure the robot is completely powered off before beginning any cleaning work.
- Always turn off the robot before turning it upside down.
- When turning the robot upside down, handle it with care to avoid damaging the LiDAR module.

Housing

Use a soft brush or a damp cloth to clean the robot's housing. Avoid using alcohol, gasoline, acetone, or other corrosive or volatile solvents, as they may damage the robot’s appearance and internal components.

Bottom

Wear protective gloves while cleaning the chassis and cutting discs. Use a brush to remove debris. Check for blade damage and ensure that the blades and cutting discs can rotate freely. DO NOT use sharp objects to clean the bottom.

Remove the cutting disc (**A**) and cutting blade guard (**B**) and clean them thoroughly. Take care not to put pressure on the LiDAR module.

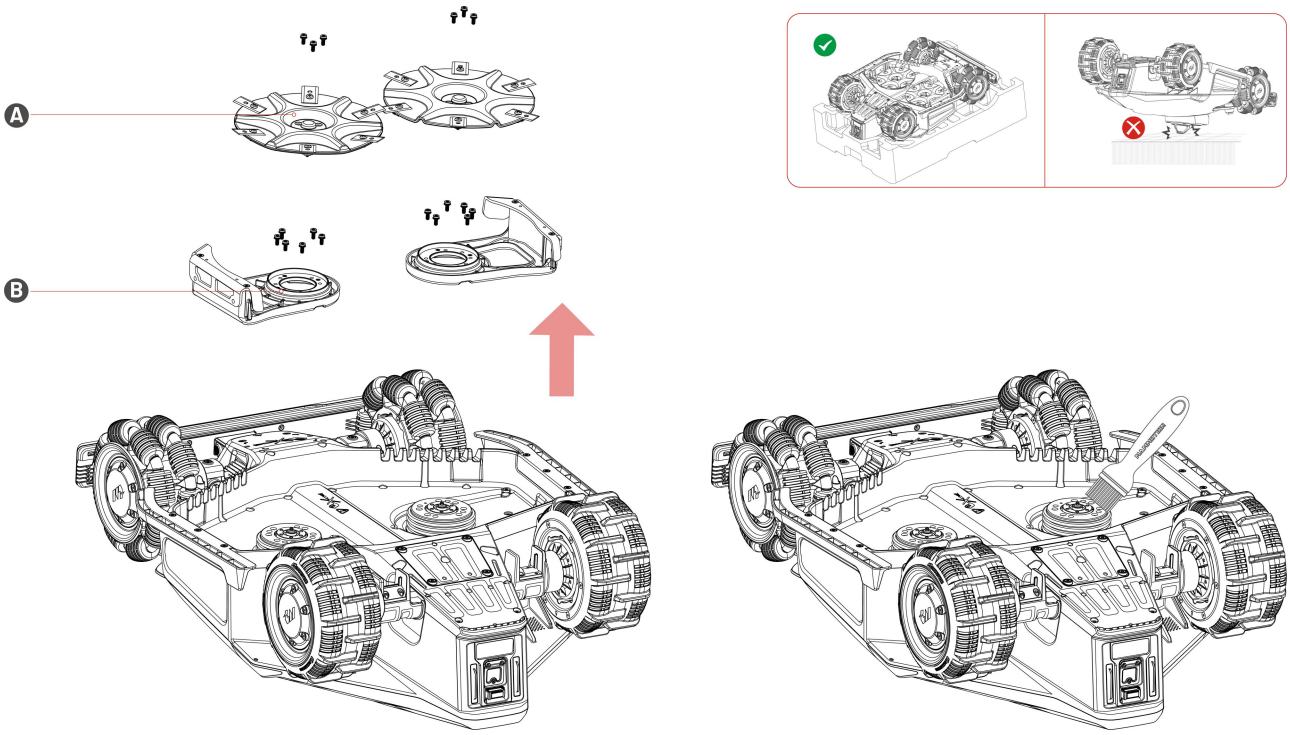

Wheels

Clean the wheels using a brush or water hose. Remove the mud if any.

Vision Camera / LiDAR Module

Wipe the vision camera lens / LiDAR module with a microfiber cloth to remove any stains.

Rear

Regularly clean the rear charging pads and infrared receiver with a cloth to remove grass clippings and dirt. Keeping these parts clean prevents charging failures.

Charging Station Cleaning

Unplug the charging station before cleaning or performing maintenance on the charging station. Use a brush and cloth to clean the infrared transmitter and the charging contact.

RTK Reference Station Cleaning

Wipe the RTK reference station with a cloth to remove any accumulated dirt.

6.2 Cutting Blades Maintenance

WARNING

- Always wear protective gloves when replacing the cutting disc or blades. DO NOT use an electric screwdriver during installation.
- When replacing the cutting disc or blades, replace all the screws at the same time to ensure optimal cutting performance.
- After installing, ensure the cutting blades can all rotate freely.

- To ensure optimal performance during long-term storage, keep the hub motor shaft dry and clean. Regular maintenance of the motor shaft helps prevent dirt and moisture buildup, which can affect the motor's function.
- Cutting blades are considered wear parts and should be replaced if they become severely worn. It is recommended to replace the blades every 3 months or after 150 hours of use. For thicker grass, more frequent blade replacement may be necessary.

Replacing the Cutting Blades

1. Turn off the robot.
2. Place the robot upside down on a soft, clean surface, taking care not to put pressure on the LiDAR module.
3. Remove the old cutting blades with the included screwdriver using the Phillips bit.
4. Install the new cutting blades using the included screws. Ensure that the blades can rotate freely and are securely installed.

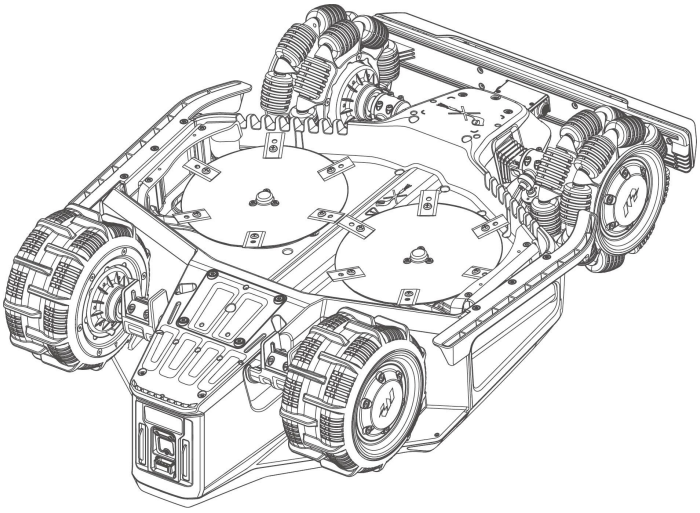

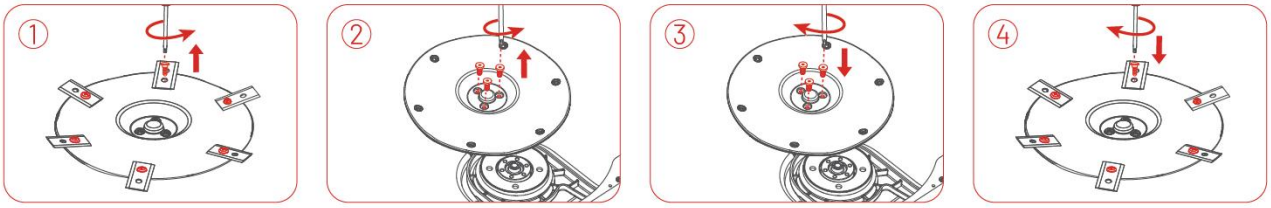

6.3 Battery Maintenance

- Charge the robot to at least 80% before long-term storage to prevent battery over-discharge.
- Recharge the robot to at least 80% every 90 days, even when it is not in use.
- Ensure the charging ports on the robot are clean and dry before storing or charging.

6.4 Storage

To ensure your robot is in optimal condition for the next mowing season, store the robot and charging station properly.

Storing the Robot

If the ambient temperature drops below -10 °C (14 °F), keep the robot indoors.

1. Remove the robot from the charging station and ensure the battery level is at least 80%.
2. Turn off the robot.
3. Clean the robot with a damp cloth or soft brush. DO NOT turn the robot upside down to clean its chassis with water.
4. Leave the robot to dry. DO NOT turn it upside down during this process.
5. Apply anti-corrosion lubricant to the charging pads. DO NOT apply the chemicals to any other parts of the robot, especially metal contact areas, except for the connectors.
6. Remove the bumper and clean the connection slot with a brush.
7. Clean the bumper with a brush.
8. Remove the security key.
9. Store the robot indoors.

Storing the Charging Station

If the ambient temperature drops below -20 °C (-4 °F), keep the charging station indoors.

1. Disconnect the power supply.
2. Remove the stakes.
3. Use a brush and cloth to clean the charging station thoroughly.
4. Store the charging station and the power supply indoors.

Storing the RTK Reference Station

If the ambient temperature is above -20 °C (-4 °F):

1. Unplug the RTK reference station.
2. Twine the cable around the RTK reference station and tighten the protective cap.
3. Cover the RTK reference station with a plastic bag or cover.

If the ambient temperature drops below -20 °C (-4 °F), keep the RTK reference station indoors:

If the RTK reference station is installed on the ground, follow the steps below:

1. Delete the map in the Mammotion app.
2. Unplug the RTK reference station.
3. Remove the RTK reference station from the mounting pole.
4. Remove the antenna.
5. Use a cloth to clean the RTK reference station.
6. Store the RTK reference station, antenna, and RTK floor mount indoors.

If the RTK reference station is installed on the wall, follow the steps below:

1. Unplug the RTK reference station.
2. Remove the RTK reference station from the RTK wall mount.
3. Remove the antenna.
4. Use a cloth to clean the RTK reference station.
5. Store the RTK reference station and antenna indoors.

7 Transportation and Moving

For long-distance transportation, Mammotion recommends using the original packaging for both the robot, charging station, and RTK reference station.

To Safely Move the Robot:

1. Turn off the robot.
2. Lift the robot using its handle.
3. Keep the cutting disc away from your body.

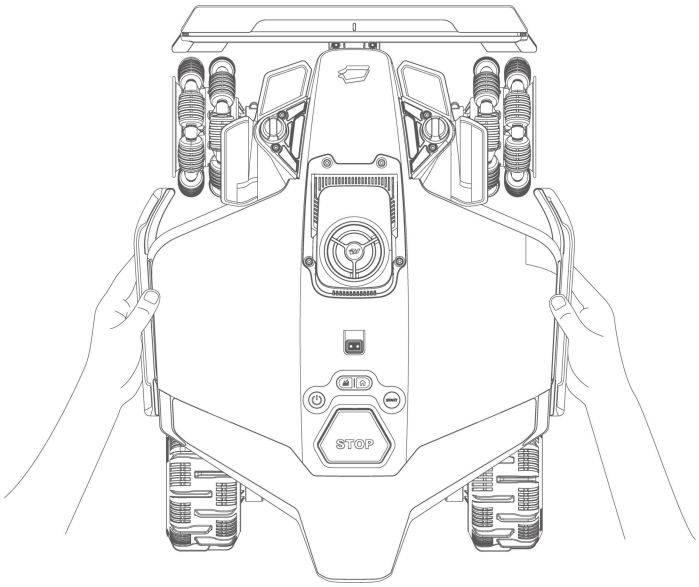

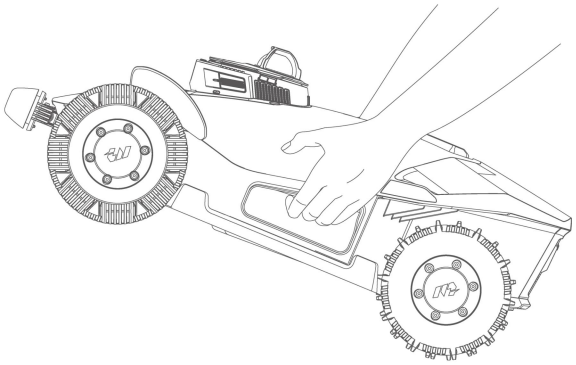

8 Disposal

CAUTION

Remove the battery only when disposing of the product. Removing it otherwise will void the warranty.

When disposing of the product, please obey the local regulations and requirements.

Do not dispose of batteries with regular household waste. Remove the battery and return it to a collection point.

To Remove the Battery:

1. Turn the robot over and loosen the screws using the included hex-bit screwdriver.

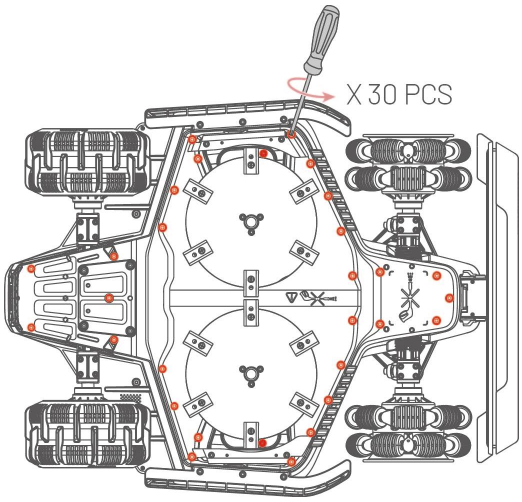

2. Turn the robot upright, then remove the top cover and the middle frame.

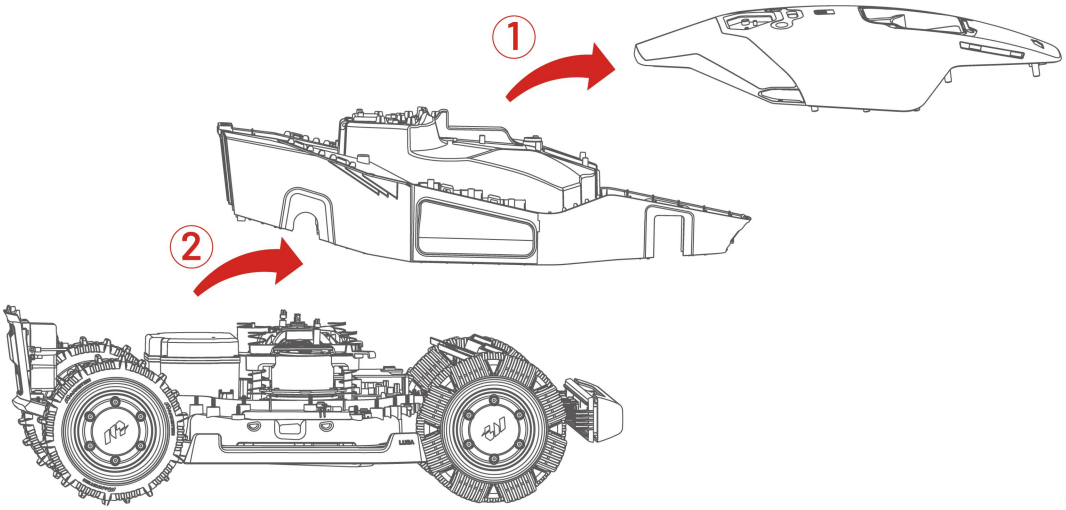

3. Cut the zip tie and disconnect the battery cables.

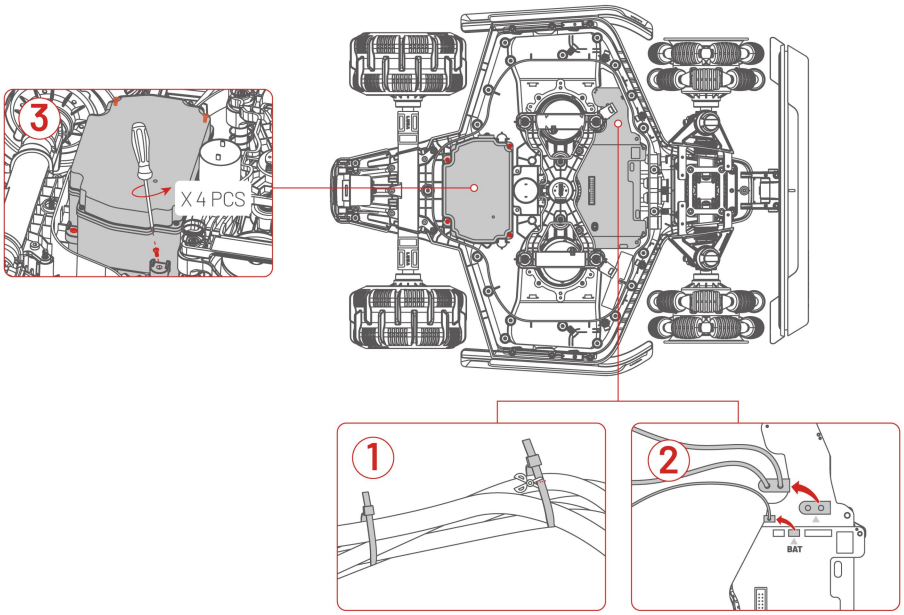

4. Remove the battery.

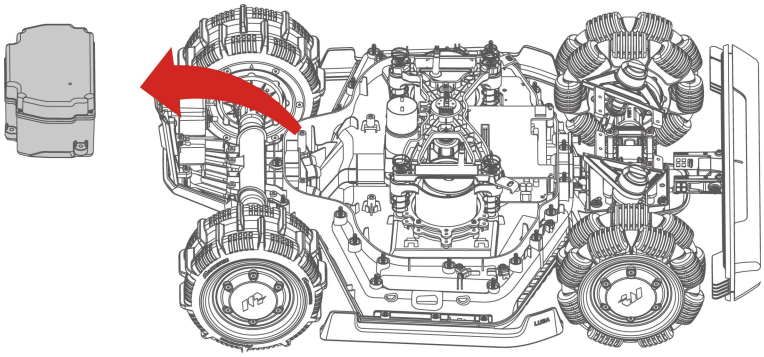

9 Product Specifications

9.1 Technical Specifications

Standard Version (Cutting Height: 25-70 mm/1-2.7 in)				
Specifications	**LUBA 3 AWD**			
	1500	**3000**	**5000**	**10000**
Model	LUB3S1	LUB3S2	LUB3S3	LUB3S4
Mowing Area	1,500 m^2 (0.37 acre)	3,000 m^2 (0.75 acre)	5,000 m^2 (1.25 acres)	10, 000 m^2 (2.5 acres)
Max. multi-zone Management	15	30	50	100
Engine	All-wheel Drive (AWD)			
Max. Slope inside Task Area	80% (38.6°)			
Max. Slope at Edge	40% (21.8°)			
Vertical Obstacle Passing Ability	50 mm (2 in)			
Cutting Width	400 mm (15.7 in)			
Cutting Height Adjustment	25-70 mm (1-2.7 in)			
Charging Time (15-100%)	80 min	105 min	130 min	
Mowing Time per Charge (100-15%)	113 min	150 min	180 min	
Auto-recharge	YES			
GPS Theft Tracking	YES			
Geo-fence Alarm	YES			

Standard Version (Cutting Height: 25-70 mm/1-2.7 in)		
Vision Geo-fence	YES	
Lift Sensor	YES	
Tilt Sensor	YES	
RTK Signal Coverage	-	**EU/UK models:** -
		AU/NA models: Net: 5 km (3.1 mi.) Datalink: 120 m (394 ft)
Positioning & Navigation	360° LiDAR Module & AI Vision	**EU/UK models:** 360° LiDAR Module & AI Vision & NetRTK
		AU models: 360° LiDAR Module & AI Vision & RTK
		NA models: 360° LiDAR Module & AI Vision & RTK & NetRTK*
Obstacle Avoidance	360° LiDAR Module & AI Vision & Physical Bumper	
Voice Control	Alexa & Google Home	
Vision Monitoring	YES	
Connectivity	4G & Bluetooth & Wi-Fi	
A-weighted Sound Power Level	L_{WA}=64 dB, K_{WA}=3 dB	
A-weighted Sound Pressure Level	L_{PA}=56 dB, K_{PA}=3 dB	
Waterproof	Robot: IPX6 Charging Station: IPX6 RTK Reference Station: IPX6	
Rain Detection	YES	
Recommended Operation Temperature	0-40 °C (32-104 °F)	

Standard Version (Cutting Height: 25-70 mm/1-2.7 in)		
Recommended Storage Temperature	-10-40 °C (14-104 °F)	
Net Weight	19.2 kg (42 lbs.)	19.5 kg (43 lbs.)
Dimensions (L x W x H)	690 x 533 x 279 mm (27.2 x 21 x 11 in)	

H Version (Cutting Height: 55-100 mm/2.2-4 in)				
Specifications	**LUBA 3 AWD**			
	1500H	**3000H**	**5000H**	**10000H**
Model	LUB3H1	LUB3H2	LUB3H3	LUB3H4
Mowing Area	1,500 m^2 (0.37 acre)	3,000 m^2 (0.75 acre)	5,000 m^2 (1.25 acres)	10, 000 m^2 (2.5 acres)
Max. multi-zone Management	15	30	50	100
Engine	All-wheel Drive (AWD)			
Max. Slope Inside Task Area	80% (38.6°)			
Max. Slope at Edge	40% (21.8°)			
Vertical Obstacle Passing Ability	80 mm (3.2 in)			
Cutting Width	400 mm (15.7 in)			
Cutting Height Adjustment	55-100 mm (2.2-4 in)			
Charging Time (15-100%)	80 min	105 min	130 min	

H Version (Cutting Height: 55-100 mm/2.2-4 in)			
Mowing Time per Charge (100-15%)	113 min	150 min	180 min
Auto-recharge	YES		
GPS Theft Tracking	YES		
Geo-Alarm	YES		
Vision GeoFence	YES		
RTK Signal Coverage	N/A	Net: 5 km (3.1 mi.) Datalink: 120 m (394 ft)	
Positioning & Navigation	360° LiDAR Module & AI Vision	360° LiDAR Module & AI Vision & RTK & NetRTK*	
Obstacle Avoidance	360° LiDAR Module & AI Vision & Physical Bumper		
Voice Control	Alexa & Google Home		
Vision Monitoring	YES		
Connectivity	4G & Bluetooth & Wi-Fi		
A-weighted Sound Power Level	L_{WA}=66 dB, K_{WA}=3 dB		
A-weighted Sound Pressure Level	L_{PA}=58 dB, K_{PA}=3 dB		
Waterproof	Robot: IPX6 Charging Station: IPX6 RTK Reference Station: IPX6		
Rain Detection	YES		
Recommended Operation Temperature	0-40 °C (32-104 °F)		

H Version (Cutting Height: 55-100 mm/2.2-4 in)			
Recommended Storage Temperature	-10-40 °C (14-104 °F)		
Net Weight	19.5 kg (43 lbs.)	19.7 kg (43 lbs.)	20 kg (44 lbs.)
Dimension (L x W x H)	690 x 528 x 309 mm (27.2 x 20.8 x 12.2 in)		

*NOTE: NetRTK is currently available in select regions across North America.

9.2 Operating Bands Specifications (For EU Models)

Robot

Category	**Frequency Range (MHz)**	**Maximum Transmitter Power (dBm)**
LORA	863.1-869.85	<13.98
Bluetooth	2400-2483.5	<20
Wi-Fi	2400-2483.5	<20
	5500-5700	<20
	5745-5825	<13.98
GSM900	880-915 (Tx); 925-960 (Rx)	35
GSM1800	1710-1785 (Tx); 1805-1880 (Rx)	32
WCDMA Band I	1920-1980 (Tx); 2110-2170 (Rx)	25
WCDMA Band VIII	880-915 (Tx); 925-960 (Rx)	25
LTE Band 1	1920-1980 (Tx); 2110-2170 (Rx)	25
LTE Band 3	1710-1785 (Tx); 1805-1880 (Rx)	25

Category	Frequency Range (MHz)	Maximum Transmitter Power (dBm)
LTE Band 7	2500-2570 (Tx)； 2620-2690 (Rx)	25
LTE Band 8	880-915 (Tx)； 925-960 (Rx)	25
LTE Band 20	832-862 (Tx)； 791-821 (Rx)	25
LTE Band 28	703-748 (Tx)； 758-803 (Rx)	25
LTE Band 38	2570-2620 (Tx)； 2570-2620 (Rx)	25
LTE Band 40	2300-2400 (Tx)； 2300-2400 (Rx)	25
GNSS	1559-1610 1164-1300*	-

*NOTE: LUBA 3 AWD 1500 / 1500H / 3000 /3000H do not support this operating frequency.

9.3 Battery Specifications

Parameters	LUBA 3 AWD			
	1500/1500H	**3000/3000H**	**5000/5000H**	**10000/10000H**
Battery charger	**EU/UK/AU models:** ● **Model:** TS-A210-2807501/E210-1C280750M6 **Input:** 200-240 V~, 50/60 Hz, Max 1.5 A **Output:** 28 Vdc, 7.5 A, 210 W **NA models:** ● **Model:** TS-A210-2807501/E210-1C280750M6 **Input:** 100-240 V~, 50/60 Hz, Max 3 A **Output:** 28 Vdc, 7.5 A, 210 W			
Battery	21.6 Vdc, 9.4 Ah, 203 Wh	21.6 Vdc, 12 Ah, 259.2 Wh	21.6 Vdc, 15 Ah, 324 Wh	
Battery Model	MWBT06S04P-02	MWBT06S04P-01	MWBT06S05P-01	
Robot	**Input:** 28 Vdc, 7.5 A			
Charging Station	**Model:** LUBA 3 AWD 1500/ 3000 / 5000 / 10000: CHG4402 LUBA 3 AWD 1500H / 3000H / 5000H / 10000H: CHG4403 **Input:** 28 Vdc, 210 W **Output:** 28 Vdc, 7.5 A			
RTK Reference Station	-	**Model:** RTK300 **Input:** 12-28 Vdc, 2.3 W		
Charging Temperature	4-45 °C (39-113 °F)			
WARNING: Only use the power adapter provided with this product to recharge the battery.				

10 Warranty

Shenzhen Mammotion Innovation Co., Ltd warrants that this product will be free from material and workmanship defects under normal use in accordance with the product materials published by Mammotion during the warranty period. The published product materials include but are not limited to the user manual, quick start guide, specifications, disclaimers, and in-app notifications. The warranty period varies for different products and parts. Refer to the table below for your product:

Component	**Warranty**
Battery **Motor**	3 Years
LiDAR Module	
PCBA	
GPS Kit	
Charging Station	
RTK Reference Station	

If the product does not function as warranted during the warranty period, please contact Mammotion customer service for assistance.

- For products purchased from a local dealer, please reach out to the dealer first.
- Users must present a valid proof of purchase, receipt, or order number (for Mammotion Direct Sales). The Serial Number of the product is crucial for initiating warranty service.
- Mammotion will make every effort to address concerns through phone calls, email, or online chat.
- In some cases, Mammotion may advise you to download or install specific software updates.
- If issues persist, you may need to send the product to Mammotion or a local Mammotion-appointed service center for further assessment.
- The warranty period for the product begins from the original date of purchase indicated on the sales receipt or invoice.
- For pre-ordered products, the warranty period begins from the shipping date from the

local warehouse.

- Mammotion requires users to arrange the shipment by themselves if they would like to send their product to a local service center or Mammotion for further assessment. Mammotion will repair and replace the product at no cost if the problem falls under the warranty. If not, Mammotion or designated service center may charge a fee accordingly.

Examples of Faults Not Covered Under Warranty:

- Failure to follow the instructions outlined in the user manual.
- If the product arrives damaged during shipment and is not rejected upon delivery, or if no official documentation confirming the damages is provided by the shipping company. Inability to provide evidence of damage occurring during transit.
- Product malfunction due to accidents, misuse, abuse, natural disasters like floods, fires, earthquakes, exposure to food or liquid spills, improper charging, or other external factors.
- Damage resulting from using the product in ways not permitted or intended as specified by Mammotion.
- Modification of the product or its components that significantly alters functionality or capabilities without obtaining written permission from Mammotion.
- Loss, damage, or unauthorized access to your data.
- Signs of tampering or alteration on product labels, serial numbers, etc.
- Failure to provide a valid proof of purchase from Mammotion, such as a receipt or invoice, or if there is evidence of forgery or document tampering.

SHENZHEN MAMMOTION INNOVATION CO., LTD

www.mammotion.com

Copyright © 2026, MAMMOTION All Rights Reserved.

If you have any feedback on the user manual, please feel free to contact us at: doc.support@agilex.ai.