DE'LONGHI
COOKING

INSTALLATION INSTRUCTIONS
USER OPERATING INSTRUCTIONS

BUILT-IN GAS ON GLASS COOKING HOBS

CE GB IE

DēLonghi

Dear Customer,

Thank you for having purchased and given your preference to our product.

The safety precautions and recommendations reported below are for your own safety and that of others. They will also provide a means by which to make full use of the features offered by your appliance.

Please preserve this booklet carefully. It may be useful in future, either to yourself or to others in the event that doubts should arise relating to its operation.

This appliance must be used only for the task it has explicitly been designed for, that is for cooking foodstuffs. Any other form of usage is to be considered as inappropriate and therefore dangerous.

The manufacturer declines all responsibility in the event of damage caused by improper, incorrect or illogical use of the appliance.

DECLARATION OF CE CONFORMITY

- This appliance has been designed to be used only for cooking. Any other use (such as heating a room) is improper and dangerous.
- This appliance has been designed, constructed, and marketed in compliance with:
  - Safety requirements of the “Gas” Regulation (EU) 2016/426;
  - Safety requirements of the “Low voltage” Directive 2014/35/EU;
  - Safety requirements of the “EMC” Directive 2014/30/EU;
  - Requirements of EU Directive 93/68/EEC;
  - Requirements of EU Directive 2011/65/EU.

IMPORTANT INFORMATION FOR CORRECT DISPOSAL OF THE PRODUCT IN ACCORDANCE WITH EC DIRECTIVE 2012/19/EC.

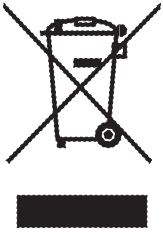

At the end of its working life, the product must not be disposed of as urban waste. It must be taken to a special local authority differentiated waste collection centre or to a dealer providing this service.

Disposing of a household appliance separately avoids possible negative consequences for the environment and health deriving from inappropriate disposal and enables the constituent materials to be recovered to obtain significant savings in energy and resources. As a reminder of the need to dispose of household appliances separately, the product is marked with a crossed-out wheeled dustbin.

IMPORTANT SAFETY PRECAUTIONS AND RECOMMENDATIONS

IMPORTANT: This appliance is designed and manufactured solely for the cooking of domestic (household) food and is not suitable for any non domestic application and therefore should not be used in a commercial environment.
The appliance guarantee will be void if the appliance is used within a non domestic environment i.e. a semi commercial, commercial or communal environment.

Read the instructions carefully before installing and using the appliance.

- This appliance has been designed and manufactured in compliance with the applicable standards for the household cooking products and it fulfills all the safety requirements shown in this manual, including those for surface temperatures.
  Some people with sensitive skin may have a more pronounced temperature perception with some components although these parts are within the limits allowed by the norms.
  The complete safety of the appliance also depends on the correct use, we therefore recommend to always pay a extreme attention while using the product, especially in the presence of children.
- After having unpacked the appliance, check to ensure that it is not damaged.
  In case of doubt, do not use it and consult your supplier or a professionally qualified technician.
- Packing elements (i.e. plastic bags, polystyrene foam, nails, packing straps, etc.) should not be left around within easy reach of children, as these may cause serious injuries.
- Some appliances are supplied with a protective film on steel and aluminum parts. **This film must be removed before using the appliance.**
- IMPORTANT: The use of suitable protective clothing/gloves is recommended when handling or cleaning this appliance.
- Do not attempt to modify the technical characteristics of the appliance as this may become dangerous to use. The manufacturer declines all responsibility for any inconvenience resulting from the inobservance of this condition.

- CAUTION: this appliance must only be installed in a permanently ventilated room in compliance with the applicable regulations.
- Do not operate your appliance by means of an external timer or separate remote-control system.
- Do not carry out cleaning or maintenance operations on the appliance without having previously disconnected it from the electric power supply.
- Do not use a steam cleaner because the moisture can get into the appliance therefore making it unsafe.
- Do not cover the hob with aluminum foils.
- Do not touch the appliance with wet or damp hands (or feet).
- Do not use the appliance whilst in bare feet.
- If you should decide not to use this appliance any longer (or decide to substitute another model), before disposing of it, it is recommended that it be made inoperative in an appropriate manner in accordance to health and environmental protection regulations, ensuring in particular that all potentially hazardous parts be made harmless, especially in relation to children who could play with unused appliances.
- The various components of the appliance are recyclable. Dispose of them in accordance with the regulations in force in your country. If the appliance is to be scrapped, remove the power cord.
- After use, ensure that the knobs are in the off position.
- Children less than 8 years of age shall be kept away unless continuously supervised.
- This appliance can be used by children aged from 8 years and above and persons with reduced physical, sensory or mental capabilities or lack of experience and knowledge if they have been given supervision or instruction concerning use of the appliance in a safe way and understand the hazards involved. Children shall not play with the appliance. Cleaning and user maintenance shall not be made by children without supervision.
- The manufacturer declines all liability for injury to persons or damage to property caused by incorrect or improper use of the appliance.

- WARNING: During use the appliance and its accessible parts become hot; they remain hot for some time after use.
  - Care should be taken to avoid touching heating elements on the hob.
  - To avoid burns and scalds, young children should be kept away.
- Make sure that electrical cables connecting other appliances in the proximity of the cooktop cannot come into contact with the hob.
- WARNING: Unattended cooking on a hob with fat or oil can be dangerous and may result in fire. NEVER try to extinguish a fire with water, but switch off the appliance and then cover flame e.g. with a lid or a fire blanket.
- WARNING: Danger of fire: do not store items on the cooking surfaces.
- Do not place or leave empty pans on the glass ceramic hob.
- Do not allow heavy or sharp objects to drop on the glass ceramic hob.
- Do not scratch the hob with sharp objects. Don’t use the hob as a work surface.
- WARNING: If the hob is cracked or otherwise damaged by falling objects etc., disconnect the appliance from the electrical power supply to avoid the possibility of electric shock and call Customer Service.
- WARNING: When correctly installed, your product meets all safety requirements laid down for this type of product category. However special care should be taken around the underneath of the appliance as this area is not designed or intended to be touched and may contain sharp or rough edges, that may cause injury.
- CAUTION: The cooking process has to be supervised. A short term cooking process has to be supervised continuously.
- If the power supply cable is damaged, it must be replaced only by an authorized service agent in order to avoid a hazard.

- If the appliance is not fitted with a supply cord and a plug, or with other means for disconnection from the supply mains having a contact separation in all poles that provide full disconnection under overvoltage category III conditions, means for disconnection must be incorporated in the fixed wiring in accordance with the wiring rules.
- WARNING: The appliance and its accessible parts become hot during use.
  Care should be taken to avoid touching heating elements.
  Children less than 8 years of age shall be kept away unless continuously supervised.
- WARNING: Use only hob guards designed by the manufacturer of the cooking appliance or indicated by the manufacturer of the appliance in the instructions for use as suitable or hob guards incorporated in the appliance. The use of inappropriate guards can cause accidents.

ENERGY LABELLING/ECODESIGN

- Commission regulation (EU) No 66/2014 (implementing Directive 2009/125/EC of the European Parliament and of the Council).

Reference to the measurement and calculation methods used to establish compliance with the above requirements:

- Standard EN30-2-1 (hobs: gas fired burners).

USE OF THE APPLIANCE, ENERGY SAVING TIPS

HOB

GAS FIRED BURNERS

- It is important that the diameter of the pot be suitable to the size of the burner so as not to compromise the high output of the burners and therefore energy waste. A small pot on a large burner does not give you a boiling point in a shorter amount of time since the capacity of heat absorption of a liquid mass depends on the volume and the surface of the pot.
- Avoid keeping a burner on without something on it (without pot).

Advice for the installer

1 INSTALLATION

IMPORTANT:

- The appliance is designed and approved for domestic use only and should not be installed in a commercial, semi-commercial or communal environment.
  Your product will not be guaranteed if installed in any of the above environments and could affect any third party or public liability insurances you may have.
- Specific instructions for the United Kingdom only:
  - The appliance is designed and approved for domestic use only and should not be installed in a commercial, semi- commercial or communal environment, in Motorhomes, Caravans (except Static/Park Homes), or any boat or vessel used on the sea, estuary, lakes or inland waterways.
    Your product will not be guaranteed if installed in any of the above environments and could affect any third party or public liability insurances you may have.
  - The appliance may be installed in a kitchen, kitchen/diner or a bed sitting room, but not in a room or space containing a bath or a shower without first consulting current regulations.
    The appliance must not be installed in a bed-sitting room of less than 20 m^3.
- This appliance is to be installed, regulated and adapted to function only by an authorized person (SUITABLY QUALIFIED AND REGISTERED TECHNICIAN) in compliance with the current local regulations in force and in observation of the instructions supplied by the manufacturer.
  Failure to observe this rule will invalidate the warranty.
- Installation technicians must comply to current laws in force concerning ventilation and the evacuation of exhaust gases.
- Incorrect installation, for which the manufacturer accepts no responsibility, may cause personal injury or damage.
- This appliance shall only be serviced by authorized personnel.
- Always disconnect the appliance from mains power supply before carrying out any maintenance operations or repairs.
- **Important: The use of suitable protective clothing/gloves is recommended when handling or cleaning of this appliance.**
- **These tops are designed to be embedded into kitchen fixtures measuring 600 mm in depth, working surface 30 to 40 mm thick.**
- **The appliance must be housed in heat-resistant units.**
- **The walls of the units must not be higher than work top and must be capable of resisting temperatures of 70 °C above room temperature.**
- **We would point out that the adhesive which bonds the plastic laminate to the furniture must withstand temperatures not less than 150 °C to avoid delamination.**
- **Standard installation (not flush): Do not seal the cooktop into the benchtop with silicone or glue; this makes future servicing difficult. The manufacturer will not cover the costs of removing the cooktop, or of damage caused by this removal.**
- **Do not install the appliance near inflammable materials (e.g. curtains).**

WARNING!
When correctly installed, your product meets all safety requirements laid down for this type of product category. However special care should be taken around the underneath of the appliance as this area is not designed or intended to be touched and may contain sharp or rough edges, that may cause injury.

TECHNICAL INFORMATION FOR THE INSTALLER

In order to install the cooker top into the kitchen fixture, a hole with the dimensions shown in fig. 1.1a or 1.1b has to be made, bearing in mind the following:

■ 30 cm wide models:

- A 40 mm ventilation gap must be provided between the bottom of the appliance and any cabinetry, draw unit or appliance.
- If the base of the cooktop is accessible through a cupboard or drawer space after installation, a thermal protection barrier is not required.
- If the cooktop is installed above an oven, the two appliances shall be connected to the gas and/or electrical supply with independent connections.

■ 60 cm wide models:

- A 40 mm ventilation gap must be provided between the bottom of the appliance and any cabinetry, draw unit, thermal protection barrier or appliance.
- If the cooktop is installed directly above an oven (which does not have a cooling fan motor) a thermal protection barrier must be installed below the base of the cooktop as indicated in fig. 1.1d.
- If the base of the cooktop is accessible through a cupboard or drawer space after installation or if the oven installed below the cooktop has a cooling fan motor, the thermal protection barrier is not required.
- If the cooktop is installed above an oven, the two appliances shall be connected to the gas and/or electrical supply with independent connections.

■ 75 cm wide models:

- A 40 mm ventilation gap must be provided between the bottom of the appliance and any cabinetry, draw unit, thermal protection barrier or appliance.
- If the cooktop is installed directly above an oven (which does not have a cooling fan motor) or if its base is accessible through a cupboard or drawer space after installation, a thermal protection barrier must be installed below the base of the cooktop as indicated in fig. 1.1d.
- If the oven installed below the cooktop has a cooling fan motor, the thermal protection barrier is not required.
- If the cooktop is installed above an oven, the two appliances shall be connected to the gas and/or electrical supply with independent connections.

■ 90 cm wide models:

- A 40 mm ventilation gap must be provided between the bottom of the appliance and any cabinetry, draw unit, thermal protection barrier.
- If the base of the cooktop is accessible through a cupboard or drawer space after installation, a thermal protection barrier must be installed below the base of the cooktop as indicated in fig. 1.1d.

■ All models:

- The cooker top must be kept no less than 200 mm away from any side wall (from side edge of cutout - figs. 1.1a, 1.1b, 1.1c).
- The hob must be installed at least 60 mm from the wall (from rear edge of cutout - fig. 1.1a, 1.1b).
- There must be a distance of at least 650 mm between the hob and any wall cupboard or extractor hood positioned immediately above (see fig. 1.1c).

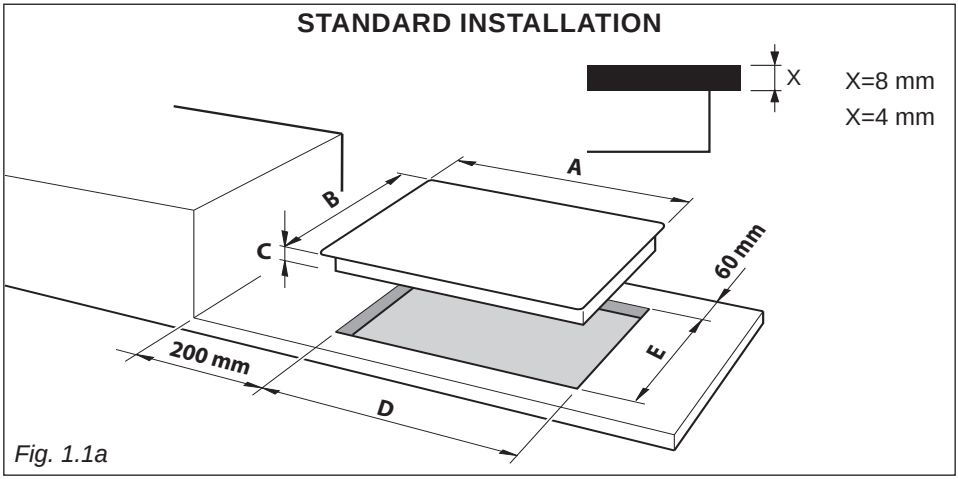

Fig. 1.1a

FLUSH INSTALLATION (MODELS WITHOUT METAL TRIM/S AND X=4 ONLY)

If you wish to install the hob flush with the work surface, it is necessary to execute/carry out a milling in the hole of the cut-out as indicated in figs. 1.1b.

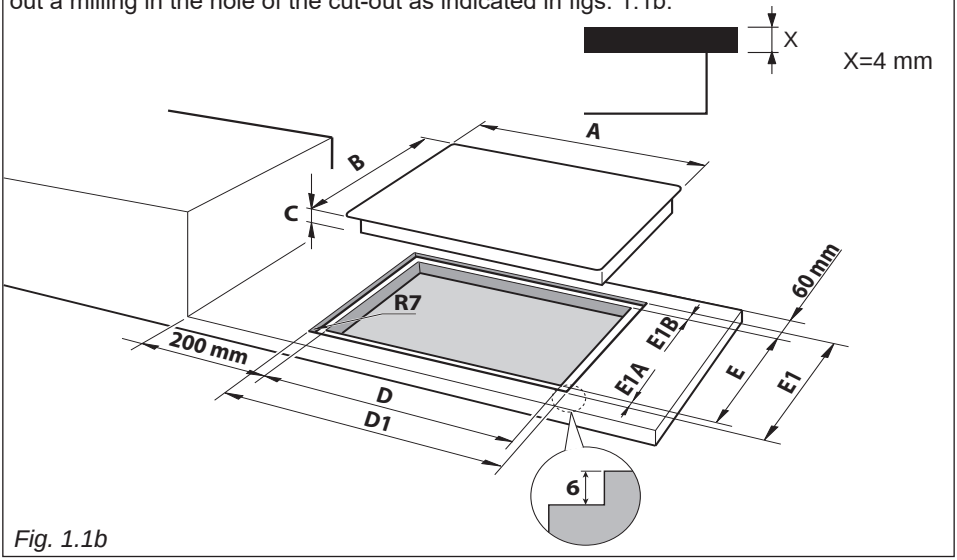

Fig. 1.1b

	Measures (mm)								
Description	**A (*)**	**B (*)**	**C (**)**	**D**	**D1 (***)**	**E**	**E1 (***)**	**E1A (***)**	**E1B (***)**
30 cm wide models	300	520	50 (1) 54 (2) or 60 (2) for flush installation	270	305	480	525	21	24
60 cm wide models	600	510		560	605		515	10	25
75 cm wide models	750	510		560	755		515	10	25
90 cm wide models	900	510		840	905		515	10	25

(*) For models with metal trim/s add 4mm to the measurement for each trim.
Example: front metal trim = B + 4 mm.
(**) from the top of countertop to bottom of cooktop.
(***) flush installation.

(1) X=8 mm
(2) X=4 mm

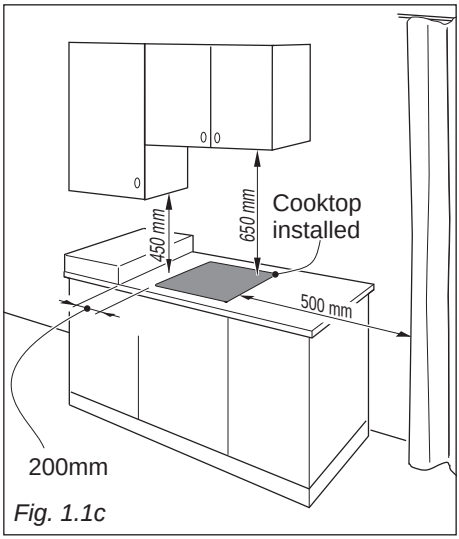

Fig. 1.1c

The thermal protection barrier must be:

- removable with the use of a tool for installation and service;
- heat-resistant;
- made from low thermal conductivity material.

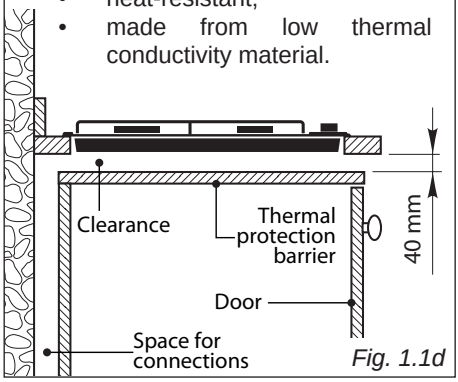

Fig. 1.1d

FASTENING THE COOKTOP

Each cooktop is provided with an installation kit including brackets and screws for fastening the cooktop to benches from 30 to 40mm thick.

30, 60 and 75 cm wide models (fig. 1.2a, 1.2b): The kit includes two "**F**" type brackets (for the front of the cooktop), two "**R**" type brackets (for the rear of the cooktop) and four self-threading screws "**S**".

90 cm wide models (fig. 1.2c): The kit includes four "**F**" type brackets (for the front of the cooktop), three "**R**" type brackets (for the rear of the cooktop) and seven self-threading screws "**S**".

- Cut the unit according to the dimensions in fig. 1.1a or 1.1b.
- Models in fig. 1.1, 1.2, 1.3, 1.5, 1.9, 1.10, 1.11 of page 25, 26: stretch gasket "**G**" over the edge of the hole made, being careful to overlay the junction edges (fig. 1.2d, 1.2e).
- Models in fig. 1.4, 1.6, 1.7, 1.8 of page 25, 26: spread the longer seal "**G1**" around the left, rear and right sides (fig. 1.2f).
- Fasten the brackets "**F**" and "**R**" to the appropriate socket holes, without tightening the screws "**S**" for the moment. Make sure that the tabs are mounted correctly, as shown (figs. 1.2h, 1.2i). Rotate the tabs so that the cooktop can be put into the cutout.
  For the models in figs. 1.4, 1.6, 1.7, 1.8 of page 25, 26, stretch the tightest gasket "**G2**" along the entire perimeter of the cooktop. (fig. 1.2g).
- Put the cooktop into the cutout and position it correctly.
- Put the brackets "**F**" and "**R**" into place; tooth "**A**" of the brackets should go into the hole (figs. 1.2h, 1.2i).
- Tighten screws "**S**" until the cooktop is completely secured to the bench.
- Using a sharp cutter or trimmer knife, trim the excess sealing material around the edge of the cooktop.
  Take care not to damage the workbench.
- In case to install the hob flush with the work surface, fill any gaps between the glass and along the perimeter of the work surface with insulating silicone, and wipe away any excess.

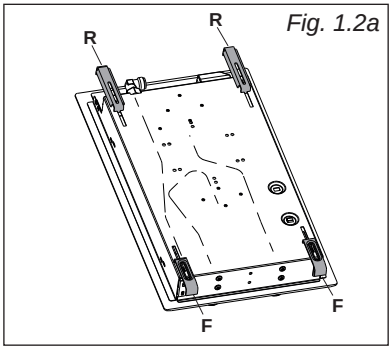

Fig. 1.2a

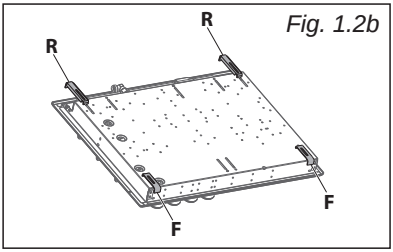

Fig. 1.2b

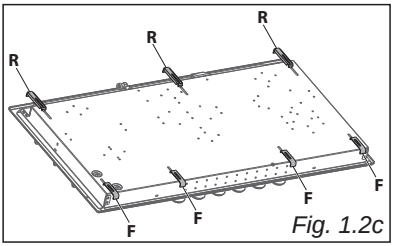

Fig. 1.2c

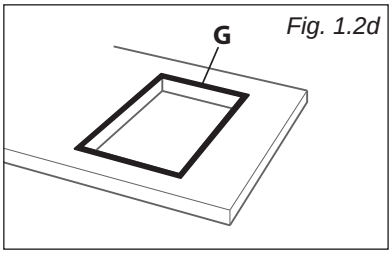

Fig. 1.2d

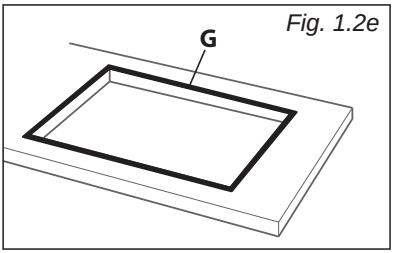

Fig. 1.2e

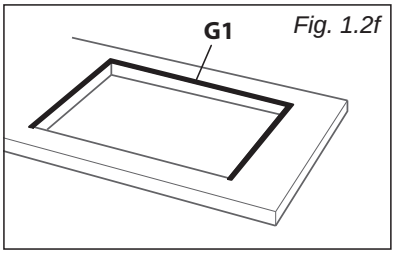

Fig. 1.2f

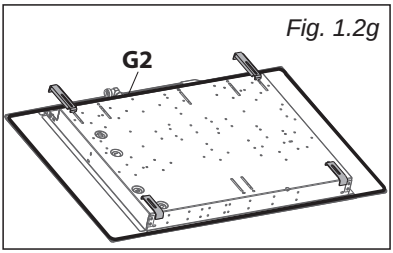

Fig. 1.2g

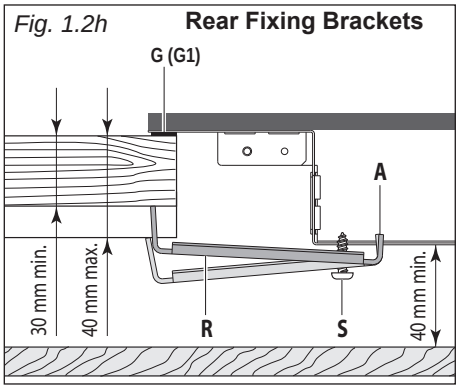

Fig. 1.2h

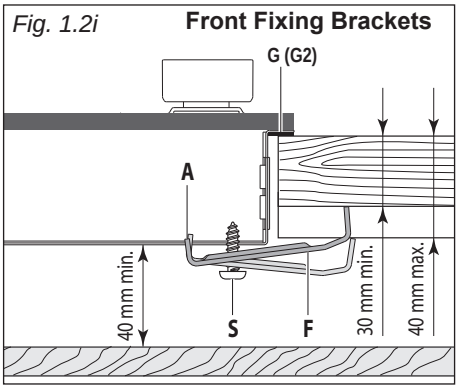

Fig. 1.2i

VENTILATION REQUIREMENTS

The appliance must be installed in compliance with applicable local regulations concerning ventilation and the evacuation of exhaust gases.
Intensive and prolonged use may require extra ventilation, e.g. opening a window, or more efficient ventilation increasing the mechanical suction power if this is fitted.

CHOOSING SUITABLE SURROUNDINGS

The room where the gas appliance is to be installed must have a natural flow of air so that the gas can burn (in compliance with applicable local regulations).
The flow of air must come directly from one or more openings made in the outside walls with a free area of at least 100 cm^2 (or refer to applicable local regulations).
The openings should be near the floor and preferably on the side opposite the exhaust for combustion products and must be made so that they cannot be blocked from either the inside or the outside.
When these openings cannot be made, the necessary air can come from an adjacent room which is ventilated as required, as long as it is not a bed room or a danger area (in compliance with applicable local regulations).
In this case, the kitchen door must allow the passage of the air.

DISCHARGING PRODUCTS OF COMBUSTION

Extractor hoods connected directly to the outside must be provided, to allow the products of combustion of the gas appliance to be discharged (fig. 1.3).
If this is not possible, an electric fan may be used, attached to the external wall or the window; the fan should have a capacity to circulate air at an hourly rate of 3-5 times the total volume of the kitchen (fig. 1.4).
The fan can only be installed if the room has suitable vents to allow air to enter, as described under the heading “Choosing suitable surroundings”.

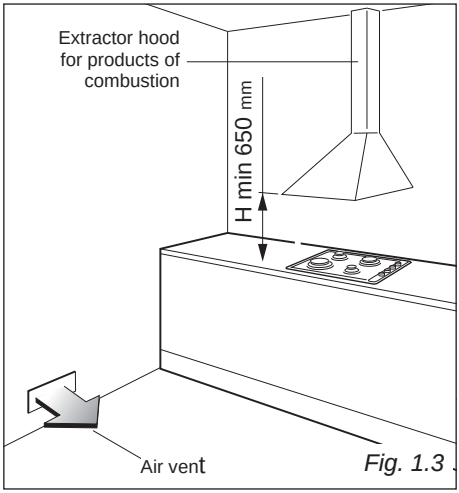

Fig. 1.3

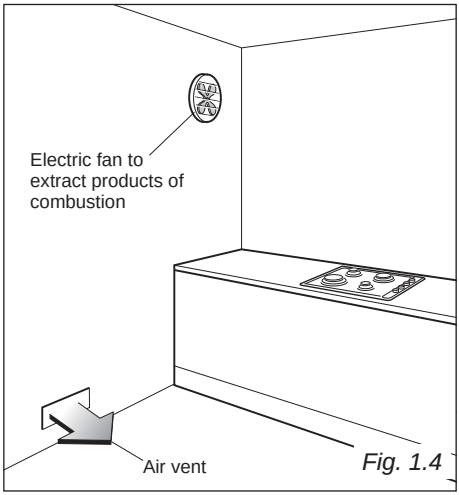

Fig. 1.4

PROVISION FOR VENTILATION (UNITED KINGDOM ONLY)

- The appliance should be installed into a room or space with an air supply in accordance with the current version of BS 5440-2.
- For rooms with a volume of less than 5m^3 - permanent ventilation of 100 cm^2 free area must be provided.
- For rooms with a volume of between 5 m^3 and 10 m^3 a permanent ventilation of 50 cm^2 free area will be required unless the room has a door which opens directly to the outside air in which case no permanent ventilation is required.
- For rooms with a volume greater than 10 m^3 - no permanent ventilation is required.

Note: Regardless of room size, all rooms containing the appliance must have direct access to the outside air via an openable window or equivalent.

- Where there are other fuel burning appliances in the same room, the current version of BS 5440-2 should be consulted to determine the correct amount of free area ventilation requirements.

2 GAS SECTION

GAS INSTALLATION REQUIREMENTS

Important!

- **The walls adjacent to the appliance must be of heat-resistant material.**
- **Before installation, make sure that the local distribution conditions (gas type and pressure) and the adjustment of this appliance are compatible. The appliance adjustment conditions are given on the plate or the label.**
- **This appliance must be installed and serviced only by a suitably qualified, registered installer with technical knowledge of both gas installation and electricity. The installation or service must comply with the current editions of the applicable standards, regulations, and codes of practice governing gas and electrical installations.**
- **Failure to install the appliance correctly could invalidate any manufacturer’s warranty.**

This appliance is supplied for use on NATURAL GAS or LPG (check the gas regulation label attached on the appliance).

- Appliances supplied for use on NATURAL GAS: they are adjusted for this gas only and cannot be used on any other gas (LPG) without modification. The appliances are manufactured for conversion to LPG.
- Appliances supplied for use on LPG: they are adjusted for this gas only and cannot be used on any other gas (NATURAL GAS) without modification. The appliances are manufactured for conversion to NATURAL GAS.

If the NATURAL GAS/LPG conversion kit is not supplied with the appliance this kit can be purchased by contacting the After-Sales Service.

INSTALLATION & SERVICE REGULATIONS (UNITED KINGDOM ONLY)

It is a legal requirement that all gas appliances are Installed & Serviced by a competent person in accordance with the current editions of the following Standards & Regulations or those regulations appropriate to the geographical region in which they are to be installed:

- Gas Safety (Installation & Use) Regulations
- Building Regulations
- British/European Standards
- Regulations for Electrical Installation

Installation and service of any gas product must be made by a suitably qualified and registered person competent on the type of product being installed or serviced and holding a valid certificate of competence for the work being carried out. Currently the proof of competence is the Accredited Certification Scheme (ACS) or N/SVQ that has been aligned to the ACS.

It is also a requirement that all businesses or self employed installers are members of a class of person approved by the Health and Safety Executive.

Failure to install the appliance correctly could invalidate any manufacturer's warranty and lead to prosecution under the above quoted regulations.

GAS CONNECTION (UNITED KINGDOM AND IRELAND ONLY)

GB IE **Cat: II2H3+**

The appliance is provided with the elbow fitting “A” already fixed to the appliance gas pipe (fig. 2.1a).
THIS IS TO BE USED FOR ITALY.

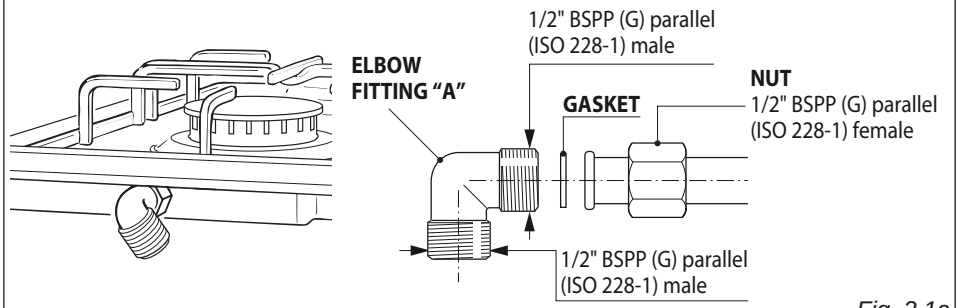

Fig. 2.1a

The elbow fitting “B” is supplied with each production unit, in a plastic bag, as a kit (fig. 2.1b).
THIS ELBOW FITTING “B” IS THE CORRECT ONE TO BE USED WHEN INSTALLING THE APPLIANCE IN THE UNITED KINGDOM OR IRELAND.
Before installing and connecting the appliance to the gas mains, the qualified technician has to remove the elbow fitting “A” and replace it by the elbow fitting "B" provided in the kit.

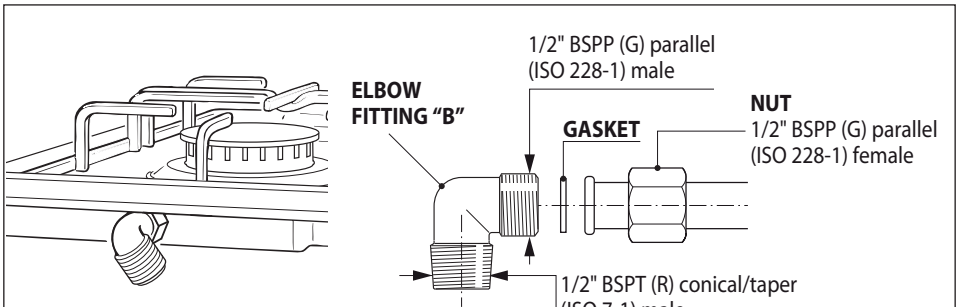

Fig. 2.1b

To be carried out by the Qualified Technician before installation:

1. Remove the elbow fitting “A” already fixed to the appliance gas pipe.
2. Fix to the appliance gas pipe the elbow fitting “B” provided with the kit (replacing also the sealing washer).

Check the connection for leaks using a soap and water solution.

Complete the product gas connection and installation (see next sections).

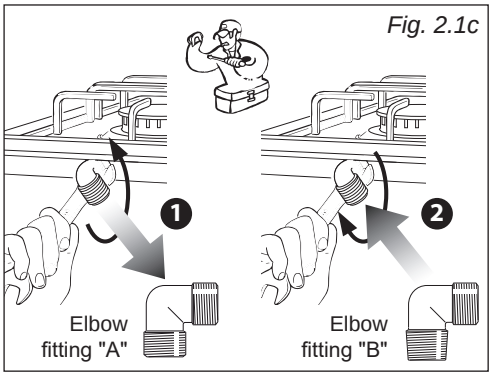

Fig. 2.1c

Installation to Natural Gas

Installation to Natural Gas must conform to the Code of Practice, etc.
The supply pressure for Natural Gas is 20 mbar.
The installation must conform to the relevant British/European Standards.

Installation to LP Gas

When operating on Butane gas a supply pressure of 28-30 mbar is required.
When using Propane gas a supply pressure of 37 mbar is required.
The installation must conform to the relevant British/European Standards.

Warning: Only a suitably qualified and registered installer, also with technical knowledge of electricity should install the appliance. He should observe the Regulations and Codes of Practice governing such installation of gas appliances.
Note: We do not preclude connecting the appliance via a flexible hose; however it must conform to BS669 or EN14800.

Notes:

- **Flexible hoses can be used where the sited ambient temperature of the hose does not exceed 70 °C. These hoses must be manufactured in accordance with BS669 part 1 or EN 14800 and be of the correct construction for the type of gas being used.**
- **Gas hoses designed for Natural Gas MUST NOT be used for supplying LPG gas (LPG gas hoses can be identified by either a red band or stripe on the rubber outer coating of the hose).**

  The hose should not be crushed or trapped or be in contact with sharp or abrasive edges.

IMPORTANT! It is the responsibility of the gas installer to ensure that the product is fully tested and commissioned in accordance with current regulations to ensure there are no gas escapes.

The fitting (fig. 2.1d) is made up of:

– 1 nut "**C**"
– 1 elbow fitting "**B**" (to be fixed to the appliance as indicated on the previous section)
– gasket (sealing washer) "**F**"

Connection to the Gas Supply

– Be careful when flexible pipes are used that they do not come into contact with moving parts.
– To maintain the thickness of 3 cm, the hob is fitted with a channel to contain the connection pipe.
– The gas inlet union can be turned in the direction required after the elbow fitting "**B**" and nut "**C**" connection (figure 2.1d) has been slackened (fig. 2.1e).
  Never put it in the horizontal or vertical position.
– Never attempt to turn the elbow "**B**" without having first slackened off the relative lock nut "**C**".
– The gasket (sealing washer) "**F**" (fig. 2.1d) guarantees the seal of the gas connection. It is recommended that it be replaced whenever it shows even the slightest deformation or imperfection.

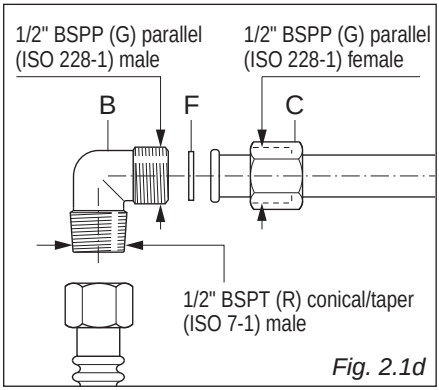

Fig. 2.1d

If installation is to be carried out using a flexible connector (to BS669 or EN14800), then the following points must be adhered to:

Note: The gas installation pipes and the final connection to the appliance connecting pipe shall be of a sufficient size to maintain the heat output of the appliance as specified on the rating plate.

1. The appliance flexible connector should not be subject to undue forces, either in normal use whilst being connected or disconnected.
2. The appliance flexible connector should not be subject to excessive heat by direct exposure to flue products or by contact with hot surfaces.
3. The socket into which the plug of the appliance flexible connector fits should be permanently attached to a firmly fixed gas installation pipe and positioned such that the hose hangs freely downwards in a natural loop and does not touch the floor.
4. The appliance flexible connector should be positioned such that it will not suffer mechanical damage; eg abrasion from the surrounding kitchen furniture which may be moved in use, such as a door or drawer, or by being trapped by a stability device.
5. The bayonet fitting should be accessible for disconnection after moving the appliance.

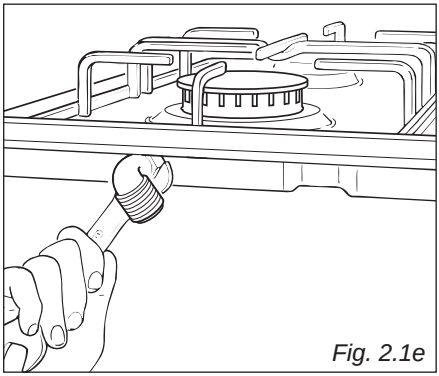
Fig. 2.1e

GAS MAINTENANCE

TABLE FOR THE CHOICE OF THE INJECTORS				
GB IE Cat: II2H3+			**G30/G31** 28-30/37 mbar	**G20** 20 mbar
BURNERS	Nominal Power [kW]	Reduced Power [kW]	Ø injector [1/100 mm]	Ø injector [1/100 mm]
Auxiliary (A)	1,00	0,40	50	77
Semi-rapid (SR)	1,75	0,45	66	101
Rapid (R)	3,00	0,75	87	129
Double-ring compact (DRC)	3,50	1,50	92	139
Double-ring (DR)	3,80	1,50	98	141
Dual (DB) - inner crown	0,80	0,40	46	70
Dual (DB) - outer crown	3,40	1,50	65 (x2)	95 (x2)

AIR VENT NECESSARY FOR GAS COMBUSTION = (2 m^3/h x kW)	
BURNERS	Air necessary for combustion [m^3/h]
Auxiliary (A)	2,00
Semi-rapid (SR)	3,50
Rapid (R)	6,00
Double-ring compact (DRC)	7,00
Double-ring (DR)	7,60
Dual (DB) - inner crown only	1,60
Dual (DB) - outer crown only	6,80
Dual (DB) - inner & outer crown	8,40

LUBRICATION OF THE GAS TAPS

In case of difficulty in the gas taps operation, call Service.

IMPORTANT

All intervention regarding installation, maintenance and conversion of the appliance must be fulfilled with original factory parts.
The manufacturer declines any liability resulting from the non-compliance of this obligation.

REPLACEMENT OF THE INJECTORS

If the injectors are not supplied they can be obtained from the “Service Centre”.

Select the injectors to be replaced according to the “TABLE FOR THE CHOICE OF THE INJECTORS”.
The nozzle diameters, expressed in hundredths of a millimeter, are marked on the body of each injector.

REPLACEMENT OF THE INJECTORS OF THE COOKTOP BURNERS

To replace the injectors proceed as follows:

- Remove pan supports and burners from the cooktop.
- Using a wrench, substitute the injectors “**J**” (figs. 2.2a, 2.2b, 2.2c, 2.2d) with those most suitable for the kind of gas for which it is to be used.

The burners are conceived in such a way so as not to require the regulation of the primary air.

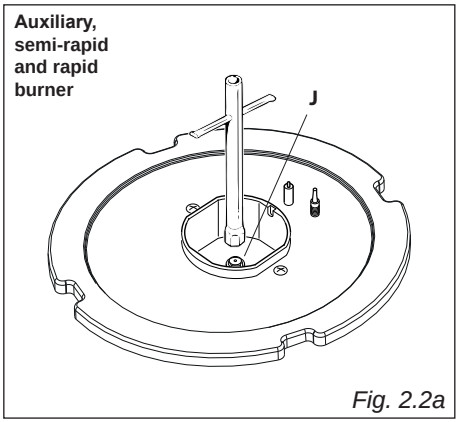

Fig. 2.2a

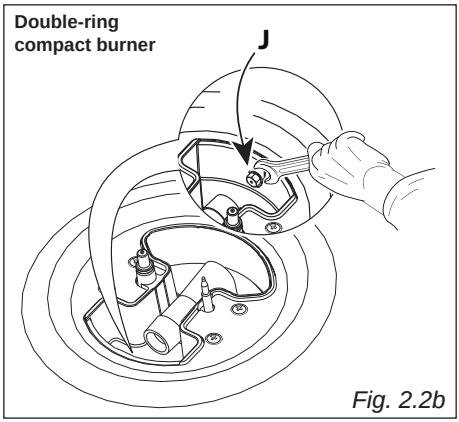

Fig. 2.2b

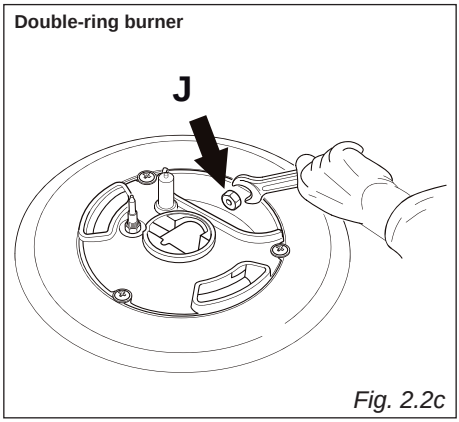

Fig. 2.2c

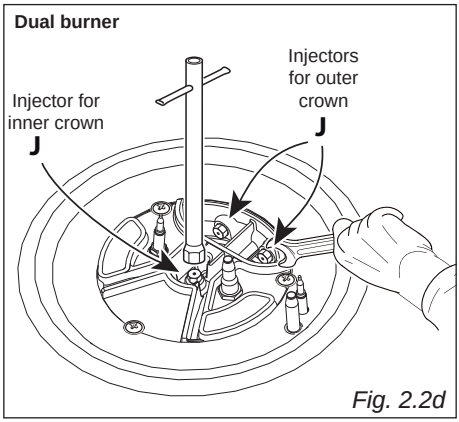

Fig. 2.2d

SETTING THE MINIMUM OF THE COOKTOP BURNERS

In the minimum position the flame must have a length of about 4 mm and must remain lit even with a quick turn from the maximum position to that of minimum.

The flame adjustment is done in the following way:

- Turn on the burner.
- Turn the tap to the 'MINIMUM' position.
- Take off the knob.
- With a small flat screwdriver turn the screw “**A**” to the correct regulation (fig. 2.3).
- **Models with dual burner:** For the dual burner set the minimum (as indicated above) for both the gas valves (one for the inner and one for the outer crown). The operations must be carried out one gas valve at a time.

Normally for LPG tighten up the regulation screw.

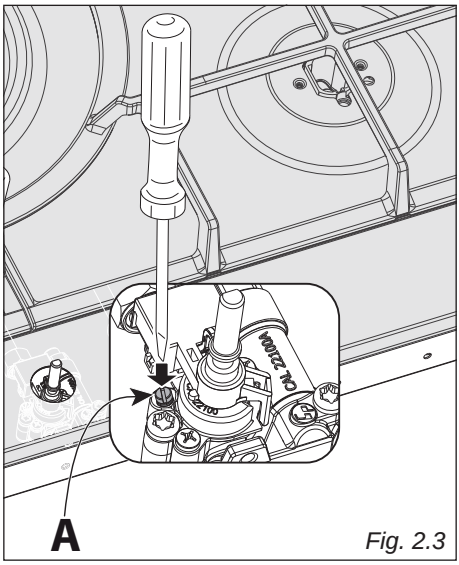

Fig. 2.3

3 ELECTRICAL SECTION

IMPORTANT: The appliance must be installed by a qualified technician according with the current local regulations and in compliance with the manufacturer instructions. Incorrect installation might cause harm and damage to people, animals or objects, for which the manufacturer accepts no responsibility.

Connection to a good earth wiring system is absolutely essential. The manufacturer accepts no responsibility for any inconvenience caused by failure to comply with this rule.

Before carrying out any work on the electrical section of the appliance, it must be disconnected from the mains.

GENERAL

- Connection to the electric power supply must be carried out by a qualified technician and following the appropriate safety regulations.
- The appliance must be connected to the mains checking that the voltage corresponds to the value given in the rating plate and that the electrical cable sections can withstand the load specified on the plate.
- If the hob is supplied without plug, fit a standard plug which is suitable for the power absorbed by the appliance and in conformity with the local rules in force.
- The colours of the wires in the appliance power cable may not correspond with the colours marked on the terminals of your electrical plug. The plug should always be wired as follows:
  - connect the green/yellow wire to the terminal marked with the letter "**E**" or the earth symbol "⏚" or coloured green/yellow;
  - connect the blue wire to the terminal marked with the letter "**N**" or coloured black;
  - connect the brown wire to the terminal marked with the letter "**L**" or coloured red.
- The plug must be connected to an outlet connected to the grounding unit in conformity to security norms.
- If the appliance is to be connected directly to the mains, it must be placed with an omnipolar switch with minimum opening between the contacts of 3 mm between the appliance and the mains.
- The power supply cable must not touch the hot parts and must be positioned so that it does not exceed 50°C above ambient.
- Once the appliance has been installed, the power switch or power plug must always be in a accessible position.
- If the power supply cable is damaged it must be substituted by a suitable cable available in the after sales service.
- The appliance must have its own supply; any other appliances installed near it must be supplied separately.

– **N.B. For connection to the mains, do not use adapters, reducers or branching devices as they can cause overheating and burning.**

– **If the hob surface is cracked disconnect the appliance from the mains and contact the After-Sales Service.**

In the event that installation should require modifications to the mains supply wiring system, it is recommended that a qualified technician be called to carry out substitution.
The technician will also have to verify that the cross-section of the electric cables on the power point match the appliance's power rating.

REPLACING THER POWER SUPPLY CABLE

WARNING: If the power supply cable is damaged, it must be replaced only by an authorised service agent in order to avoid a hazard.

To connect the supply cable:

- Unhook the terminal board cover by inserting a screwdriver into the two hooks “**A**” (fig. 3.1).
- Open the cable gland by unscrewing screw “**F**” (fig. 3.2), unscrew the terminal screws and remove the cable.
- The new supply cable, of suitable type and section, must be connected to the terminal board following the diagram in fig. 3.3.
- Close and hook again the terminal board cover.

NOTE: The earth conductor must be left about 3 cm longer than the others.

POWER SUPPLY

220-240 V 50-60 Hz 1,1 W

SECTION OF THE SUPPLY CABLE TYPE “H05V2V2-F” resistant to temperatures of 90°C

3 x 0,75 mm^2 (*) (**)

(*) Connection possible with plug and outlet
(**) Connection with wall box connection.

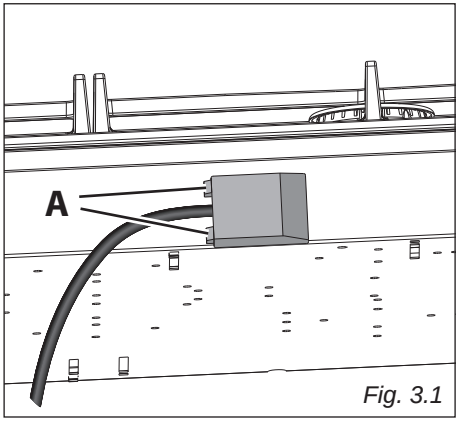

Fig. 3.1

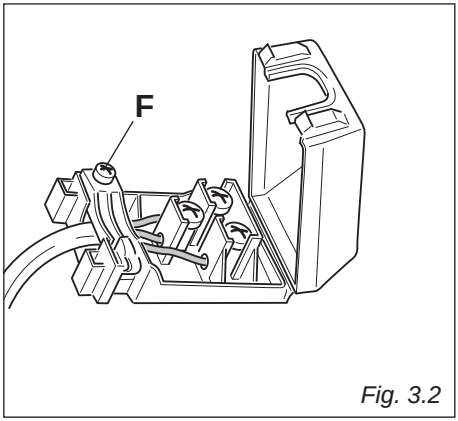

Fig. 3.2

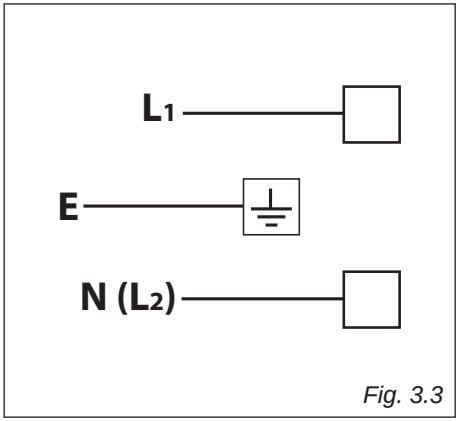

Fig. 3.3

Advice for the users

1 FEATURES AND TECHNICAL DATA

Fig. 1.1

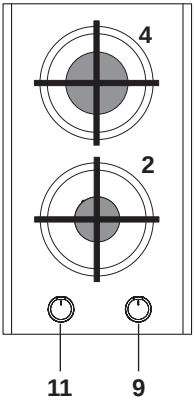

Fig. 1.2

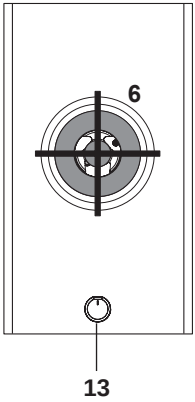

Fig. 1.3

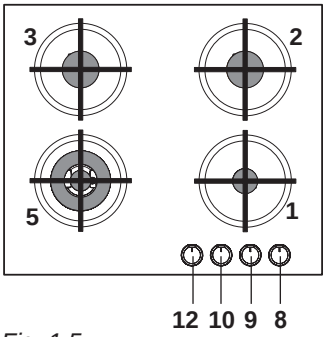

Fig. 1.4

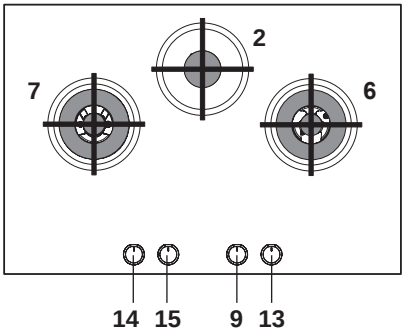

Fig. 1.5

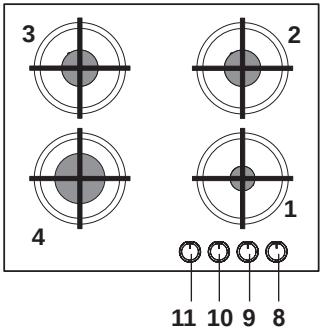

Fig. 1.6

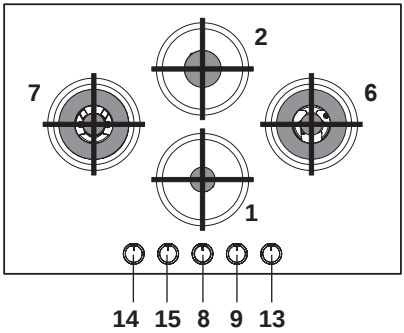

Fig. 1.7

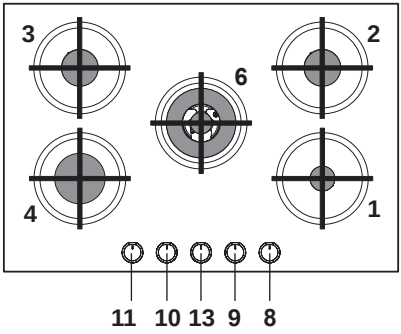

Fig. 1.8

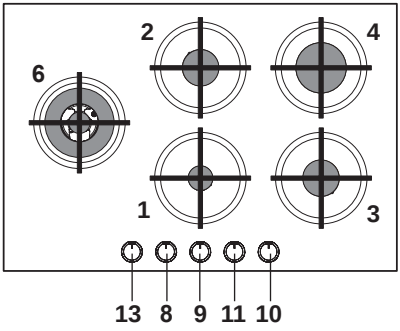

Fig. 1.9

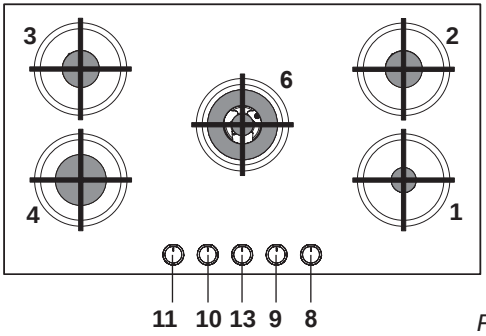

Fig. 1.10

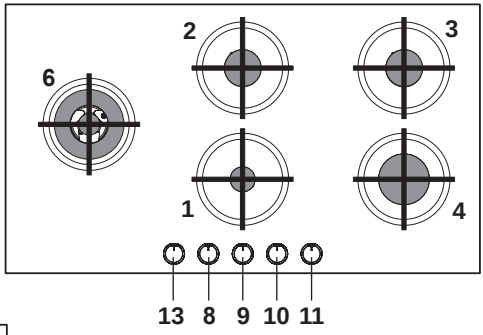

Fig. 1.11

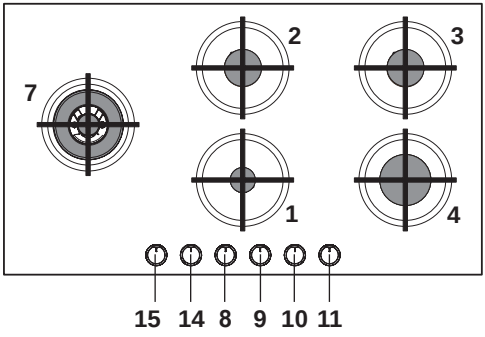

GAS BURNERS

1.	Auxiliary (A)	1,00 kW
2.	Semirapid (SR)	1,75 kW
3.	Semirapid (SR)	1,75 kW
4.	Rapid (R)	3,00 kW
5.	Double-ring compact (DRC)	3,50 kW
6.	Double-ring (DR)	3,80 kW
7.	Dual (DB) (*)	4,20 kW

(*) IMPORTANT: The Dual burner is controlled by two separate knobs; one knob for the inner crown only and one knob for the outer crown only.
The inner and outer crown can be used together or separately.
After using the dual burner check both the control knobs are in the closed " ● " position.

CONTROLS DESCRIPTION

8. Burner control knob (1)
9. Burner control knob (2)
10. Burner control knob (3)
11. Burner control knob (4)
12. Burner control knob (5)
13. Burner control knob (6)
14. Burner control knob (7), inner crown
15. Burner control knob (7), outer crown

NOTES:

- The electric ignition is incorporated in the knobs.
- The appliance has a safety valve system fitted, the flow of gas will be stopped if and when the flame should accidentally go out.

CAUTION: If the burner is accidentally extinguished, turn the gas off at the control knob and wait at least 1 minute before attempting to relight.

CAUTION: Gas hobs produce heat and humidity in the environment in which they are installed.
Ensure that the cooking area is well ventilated by opening the natural ventilation grilles or by installing an extractor hood connected to an outlet duct.

CAUTION: If the hob is used for a prolonged time it may be necessary to provide further ventilation by opening a window or by increasing the suction power of the extractor hood (if fitted).

2 HOW TO USE THE COOKTOP

GAS BURNERS

Gas flow to the burners is adjusted by turning the knobs (illustrated in fig. 2.1a, 2.1b) which control the safety valves.
Turning the knob, so that the indicator line points to the symbols printed on the panel, achieves the following functions:

– symbol	●	closed valve
– symbol	or 9	maximum aperture or flow
– symbol	or 1	minimum aperture or flow

NOTE: The knob and symbols may vary.

Caution! Do not cover the hob with aluminium foils.

Caution!
The cooking hob becomes very hot during operation.
Keep children well out of reach.

N.B. When the cooktop is not being used, set the gas knobs to their closed positions and also close the cock valve on the gas bottle or the main gas supply line.

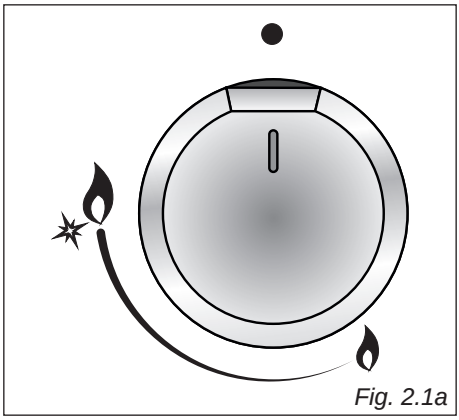

Fig. 2.1a

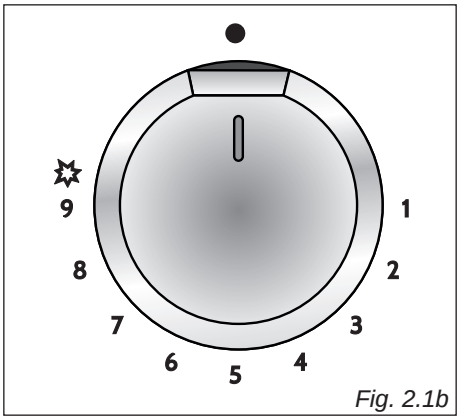

Fig. 2.1b

LIGHTING THE BURNERS

To ignite the burner, the following instructions are to be followed:

1. Press in the corresponding knob and turn counter-clockwise (fig. 2.2a or 2.2b) to the full flame position marked by the " " or " 9 "symbol (fig. 2.1a or 2.1b); hold the knob in until the flame has been lit.
   In the case of a mains failure light the burner with a match or lighted taper.
2. Wait for a few seconds after the gas burner has been lit before letting go of the knob (valve activation delay).
3. Adjust the gas valve to the desired position.

If the burner flame should go out for some reason, the safety valve will automatically stop the gas flow.

To re-light the burner, return the knob to the closed " ● " position, **wait for at least 1 minute** and then repeat the lighting procedure.

Note: If your local gas supply makes it difficult to light the burner with the knob set to maximum, set the knob to minimum and repeat the operation.

DUAL BURNER - SOME MODELS ONLY

The Dual Burner is a very flexible burner which allows different regulations and optimal cooking.
It is composed by one inner and one outer crown: **the inner and outer crown can be used together or separately**.

The Dual burner is **controlled by two separate knobs:**

- one knob for the inner crown only (" ◉ " symbol identifying the control knob);
- one knob for the outer crown only (" ○ " symbol identifying the control knob).

The Dual burner can be used:

- as a small burner (flame produced only by the inner crown);
- as a Ultra-rapid burner (flame produced only by the outer crown);
- as a high-power burner (all flames produced simultaneously by inner and outer crown).

IMPORTANT: After using the dual burner check both the control knobs are in the closed " ● " position.

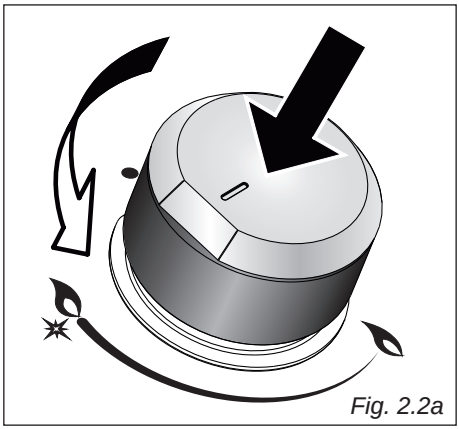

Fig. 2.2a

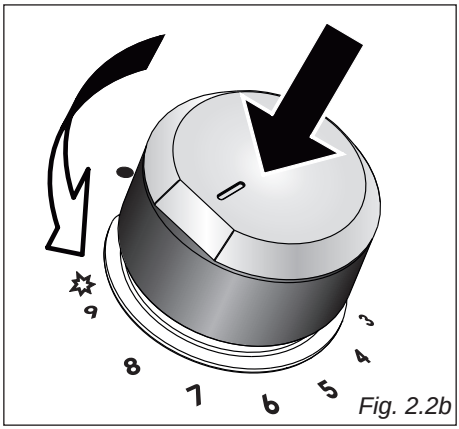

Fig. 2.2b

DEEP FAT FRYING

For safety purposes when deep fat frying, do not fill the pan more than one third full of oil.
DO NOT cover the pan with a lid and DO NOT leave the pan unattended.
In the unfortunate event of a fire, leave the pan where it is and turn off the control knobs.
Place a damp cloth or lid over the pan to smother the flames. Leave the pan to cool for at least 30 minutes before moving the pan.
DO NOT USE WATER ON THE FIRE.

CHOICE OF THE BURNER (Type A)

On the control panel, near every knob there is a diagram that indicates which burner is controlled by that knob.
The suitable burner must be chosen according to the diameter and the capacity used.
The burners and pans must be used in accordance with the following instructions:

DIAMETERS OF PANS WHICH MAY BE USED ON THE BURNERS

BURNERS	MINIMUM	MAXIMUM
Auxiliary	6 cm	14 cm
Semi-rapid	16 cm (*)	24 cm
Rapid	24 cm	26 cm
Double-ring compact	26 cm	28 cm
Double-ring	26 cm	28 cm
Dual (inner crown only)	6 cm	14 cm
Dual (outer crown only)	26 cm	28 cm
Dual (inner + outer crown)	26 cm	28 cm
Wok (**)	-	Max 36 cm
do not use pans with concave or convex bases		

(*) minimum diameter 12 cm only for the model in fig. 1.1 at pag. 20
(**) only for the models with Double-ring compact, Double-ring or Dual burner and with wok pan adapter supplied

It is important that the diameter of the pot be suitable to the potentiality of the burner so as not to compromise the high output of the burners and therefore energy waste.
A small pot on a large burner does not give you a boiling point in a shorter amount of time since the capacity of heat absorption of a liquid mass depends on the volume and the surface of the pot.

CAUTION: Make sure the pans are central to the burner for maximum stability and greater efficiency.
Make sure the pans are not in contact with the control knobs, otherwise the flame could overheat the knobs and permanently damage them.

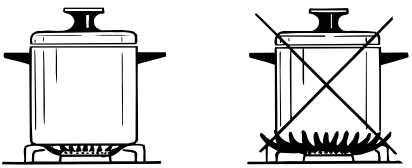

Fig. 2.3a

CHOICE OF THE BURNER (Type B)

On the control panel, near every knob there is a diagram that indicates which burner is controlled by that knob.
The suitable burner must be chosen according to the diameter and the capacity used.
The burners and pans must be used in accordance with the following instructions:

DIAMETERS OF PANS WHICH MAY BE USED ON THE BURNERS

BURNERS	MINIMUM	MAXIMUM
Auxiliary	12 cm (*)	14 cm
Semi-rapid	16 cm (**)	24 cm
Rapid	24 cm	26 cm
Double-ring compact	26 cm	28 cm
Double-ring	26 cm	28 cm
Dual (inner crown only)	12 cm (*)	14 cm
Dual (outer crown only)	26 cm	28 cm
Dual (inner + outer crown)	26 cm	28 cm
do not use pans with concave or convex bases		

(*) with small pan adapter (optional): minimum diameter 6 cm
(**) minimum diameter 12 cm only for the model in fig. 1.1 at pag. 20

It is important that the diameter of the pot be suitable to the potentiality of the burner so as not to compromise the high output of the burners and therefore energy waste.
A small pot on a large burner does not give you a boiling point in a shorter amount of time since the capacity of heat absorption of a liquid mass depends on the volume and the surface of the pot.

CAUTION: Make sure the pans are central to the burner for maximum stability and greater efficiency.
Make sure the pans are not in contact with the control knobs, otherwise the flame could overheat the knobs and permanently damage them.

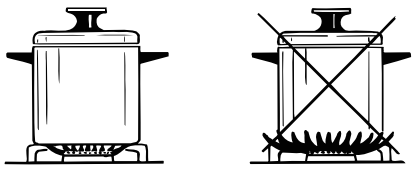

Fig. 2.3b

SMALL PAN ADAPTER - SOME MODELS ONLY (OPTIONAL)

This adapter is to be placed:

- on top of the (smaller) auxiliary burner when using small diameter pans, in order to prevent them from tipping over;
- on top of the Dual burner (**used with the inner crown only**) when using small diameter pans, in order to prevent them from tipping over.

IMPORTANT: To avoid any burner malfunction, this adapter MUST be placed correctly (figs. 2.4a, 2.4b).

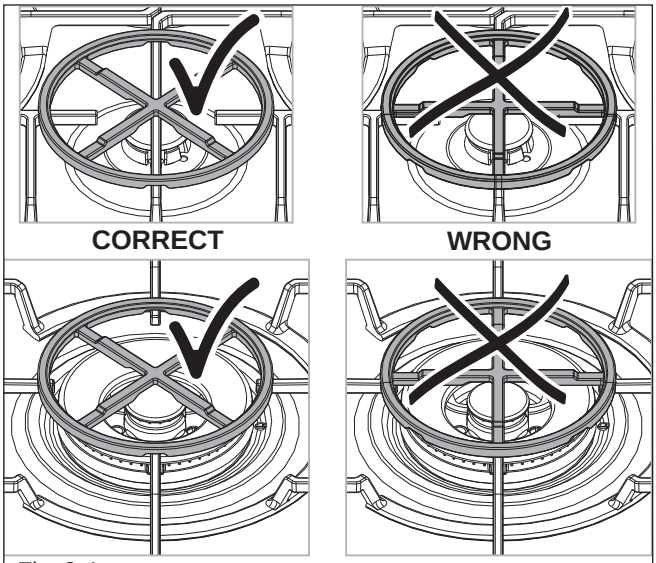

Fig. 2.4a

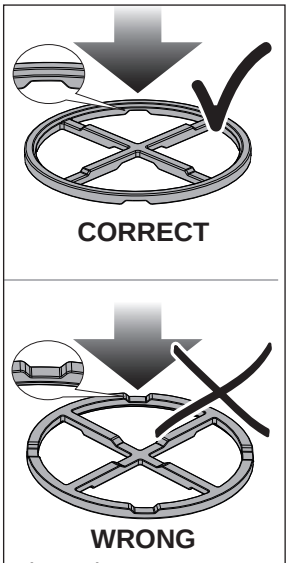

Fig. 2.4b

WOK STAND (OPTIONAL)

(fig. 2.5a - 2.5b, 2.6a - 2.6b, 2.7a - 2.7b)

This special grille for woks should be placed over the pan-rest for the double-ring compact, double ring or Dual burner (depending on models).

Warning:

- Do not use woks without this special wok stand correctly in place.
- Do not use the wok stand for ordinary, flat-bottomed saucepans.

IMPORTANT:

The special grille for wok pans **MUST BE PLACED ONLY** over the pan-rest for the double-ring compact, double ring or Dual burner (depending on models).

IMPORTANT:

When using the wok stand it MUST ONLY BE PLACED over the pan support for the double-ring compact, double-ring or Dual burner. **Under no circumstances should the wok stand be placed under the pan supports**. Incorrect placement of the wok stand in this manner may impinge the flame resulting in incomplete combustion and give rise to harmful levels of Carbon Monoxide (CO).

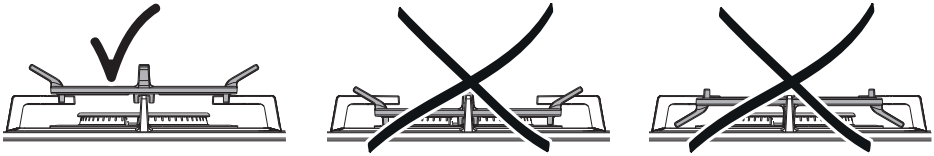

The pan stand and wok stand shown is for illustrative purposes only and may differ slightly in shape to the one supplied with your product.

MODELS WITH DOUBLE-RING COMPACT BURNER

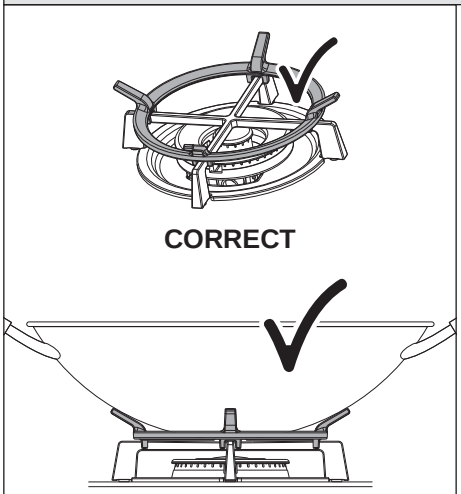

Fig. 2.5a

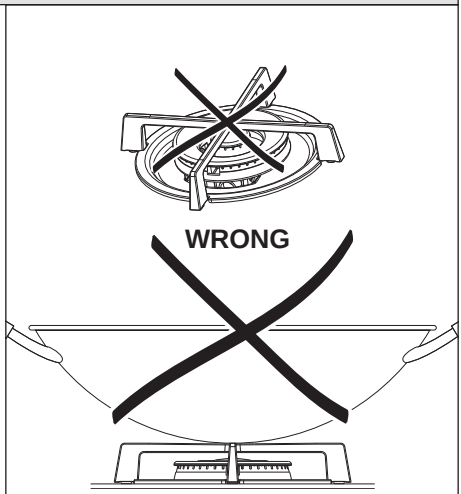

Fig. 2.5b

MODELS WITH DOUBLE-RING BURNER

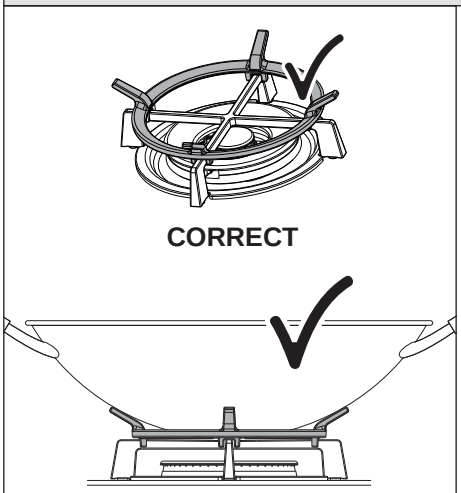

Fig. 2.6a

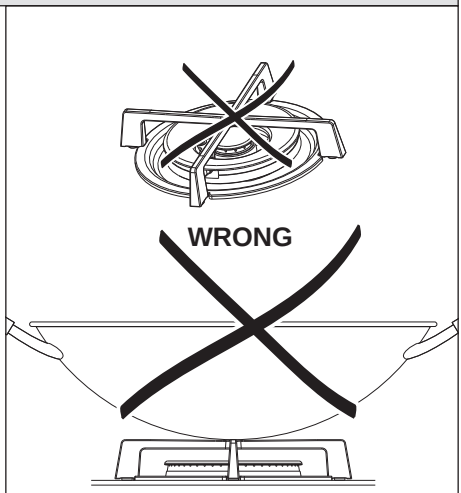

Fig. 2.6b

MODELS WITH DUAL BURNER

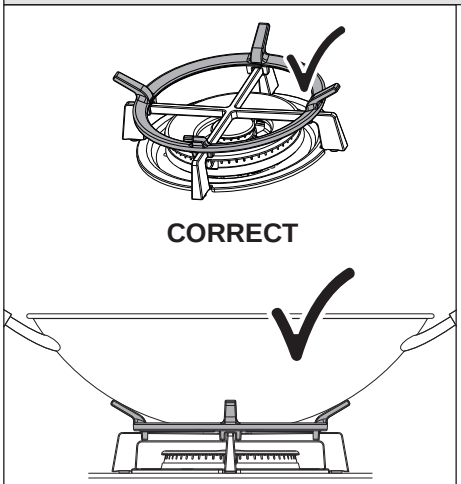

Fig. 2.7a

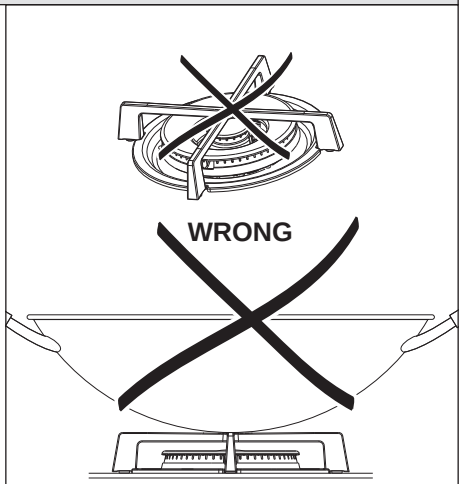

Fig. 2.7b

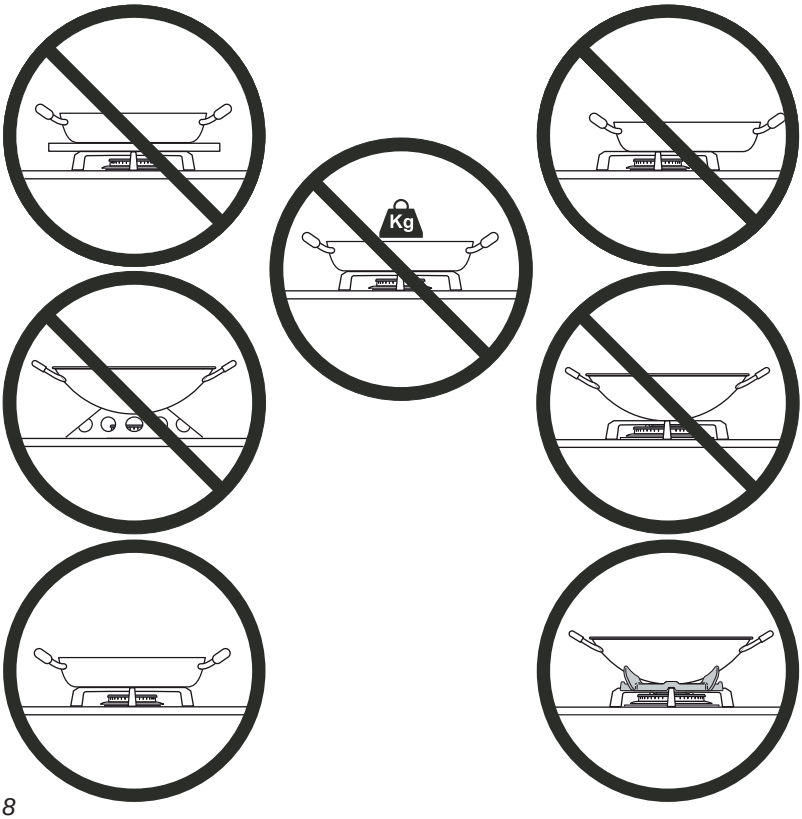

Fig. 2.8

RESTRICTIONS ON GRIDDLE PAN USAGE

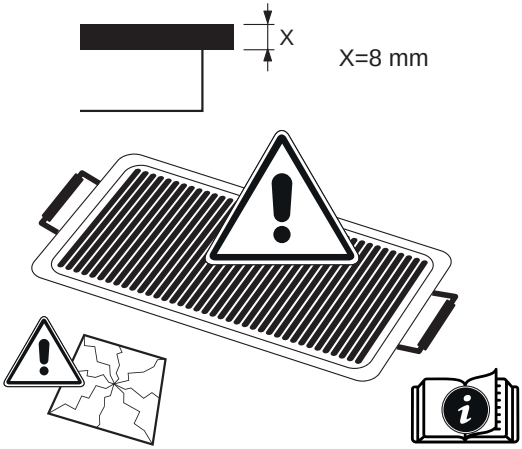

IMPORTANT! Do not use cast iron pans and plates, or pots in terracotta, stoneware or refractory material for grilling or toasting: RISK of glass breaking due to extreme heat transmission by irradiation.

INSTRUCTIONS FOR CORRECT GRILLING

- When grilling food, only use aluminum griddle pans (these may also have a non-stick coating) measuring up to 35x28 cm max.
- Only use the largest burner when grilling.
- Do not position the griddle pan over several burners at once.
- To avoid permanently damaging the glass hob, never preheat empty griddle pans for longer than 5 minutes. Then lower the heat and place the food in the griddle pan.
- Never exceed 50 minutes' operation.

IMPORTANT WARNINGS

- Do not operate the cooking zones without pans, or when the pans are empty.
- Use pans with a diameter suited to the size of the burner (see chapter "CHOICE OF THE BURNER").
- Always make sure the pan is in the centre of the cooking zone.
- Do not use the glass surface of the hob as a place to put pans/other objects when you are not using them.
- Only use the accessories supplied with the appliance.

IMPORTANT! Flame spreaders must not be used on the burners.
Risk of breaking the glass hob!

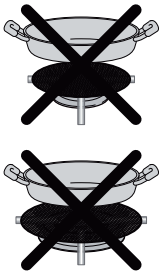

3 CLEANING AND MAINTENANCE

GENERAL ADVICE

- **Before you begin cleaning, you must ensure that the appliance is switched off and disconnected from the electrical power supply.**
- **Important: The use of suitable protective clothing/gloves is recommended when handling or cleaning of this appliance.**
- **Under no circumstances should any external covers be removed for servicing or maintenance except by suitable qualified personnel.**
- It is advisable to clean when the appliance is cold and especially when cleaning the enamelled parts.
- Be very careful that no water penetrates inside the appliance.
- Avoid leaving alkaline or acidic substances (lemon juice, vinegar, etc.) on the surfaces.
- Avoid using cleaning products with a chlorine or acidic base.
- Clean the surfaces with a damp cloth and using neutral, non-aggressive detergents. Complete the cleaning with a dry, clean cloth.
- **IMPORTANT:** Never use abrasive products (e.g. certain type of sponges) and/or aggressive products (e.g. caustic soda, detergents containing corrosive substances) that could irreversibly damage the surfaces.
- **Do not use a steam cleaner because the moisture can get into the appliance thus make it unsafe.**
- **Important: The manufacturer declines all liability for possible damage caused by the use of unsuitable products to clean the appliance.**

WARNING! When correctly installed, your product meets all safety requirements laid down for this type of product category. However special care should be taken around the underneath of the appliance as this area is not designed or intended to be touched and may contain sharp or rough edges, that may cause injury.

CLEANING

- **Control panel:** Clean very carefully with water and neutral soap; the cloth used must be rinsed well and must be free of any cleaning chemicals to avoid damaging any screen print on the facia.
- **Glass:** Clean very carefully with water and neutral soap; the cloth used must be rinsed well and must be free of any cleaning chemicals.
- **Pan stands & burner caps:** Clean with a sponge and soapy water or proprietary cream cleaner. Alway dry throughly. DO NOT PUT IN THE DISHWASHER.
- **Burner bodies (aluminium alloy):** They should be cleaned with soapy water and a clean cloth. For stubborn stains a proprietary cream or stainless steel cleaner may be used; however to maintain an uniform finish we would recommend the whole area is cleaned. NOTE: Please ensure the slots/castellations are kept free of any material/cleaner. DO NOT PUT BURNER BODIES INTO A DISHWASHER AS THIS MAY TURN THEM BLACK.

GLASS SURFACE

- Remove spillages and other types of incrustations by using only specific products which do not contain abrasives or chlorine-based acids.
- If you use a detergent, please make sure that it is not abrasive or scouring. Abrasive or scouring powders can damage the glass surface of the hob.
- All traces of the cleaner must be removed with a damp cloth.
- Dust or food particles can be removed with a damp cloth.
- Dust, fat and liquids from food that has boiled over must be removed as soon as possible.
- If they are allowed to harden they become increasingly difficult to remove. This is especially true in the case of sugar/syrup mixtures which could permanently damage the surface of the hob if left to burn on it.
- Avoid using a knife or other sharp utensil as these may damage the glass surface.
- Do not use steel wool or an abrasive sponge which could scratch the surface permanently.
- Do not put articles on the hob which can melt: i.e. plastic, aluminum foil, sugar, sugar syrup mixtures etc.

Do not use harsh abrasive cleaners or sharp metal scrapers to clean the glass since they can scratch the surface, which may result in shattering of the glass.

ENAMELLED SURFACES

All the enamelled parts must be cleaned with a sponge and soapy water only or other non-abrasive products. Dry preferably with a microfiber or soft cloth.
If acid substances such as lemon juice, tomato conserve, vinegar etc. are left on the enamel for a long time they will etch it, making it opaque.

GAS TAPS

- Do not let cleaning products come into contact with the valves.
- Periodic lubrication of the gas taps must be carried out by specialist personnel only.
- In the event of operating faults in the gas taps, call the Service Department.

IMPORTANT WARNING

NEVER unscrew the burner plate fixing screws (fig. 3.1).

The burner plates can be removed ONLY by an authorised service agent.

Damage to the appliance will occur if not observing this condition and this may result in serious injury to the user.

The manufacturer declines every responsibility for any inconvenience resulting from the inobservance of this condition.

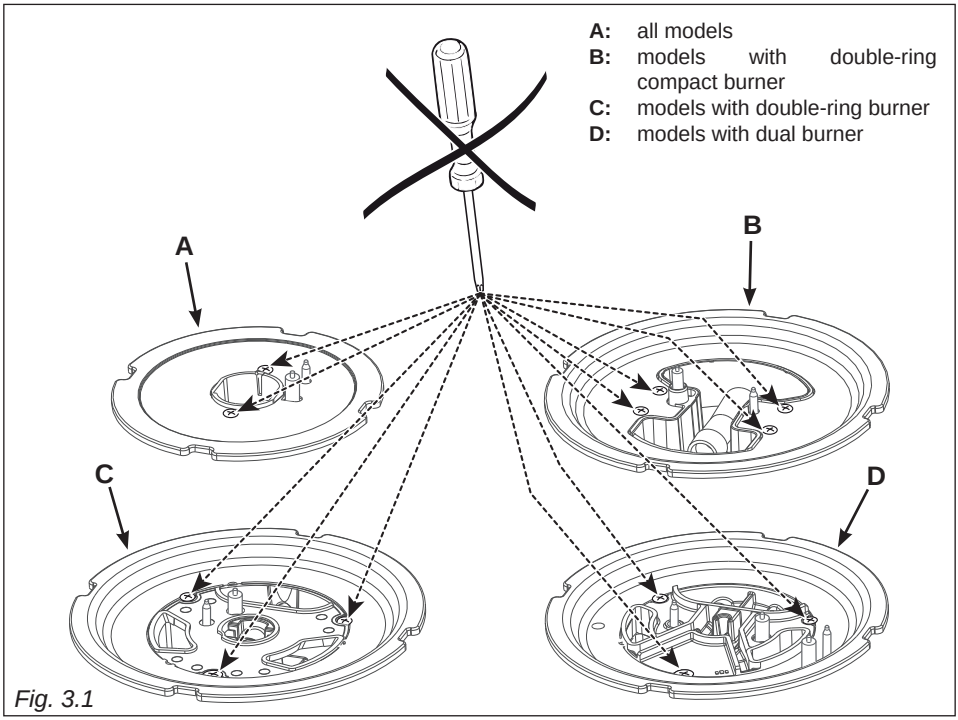

Fig. 3.1

BURNERS

These parts must be cleaned using a sponge and soapy water or other suitable non-abrasive products. Dry with a soft cloth.

Warning! Not dishwasher safe.

If left on the surface for a length of time, acidic substances such as lemon juice, tomato sauces and passata, vinegar and other similar products will damage the surface and dull its shine.

It is very important to check that the burner flame spreader and the cap have been correctly positioned. Failure to do so can cause serious problems.

Check that the electrode/s "**S**" (figs. 3.2, 3.4, 3.5, 3.6) next to each burner is/are always clean to ensure trouble-free sparking.

Check that the probe/s "**T**" (figs. 3.2, 3.4, 3.5, 3.7) next to each burner is/are always clean to ensure correct operation of the safety valves.

Both the probe and ignition plug must be very carefully cleaned.

Note: To avoid damage to the electric ignition do not use it when the burners are not in place.

Note: Continuous use may cause a change in the glaze around the burners and grids, corresponding to the areas exposed to the heat. This is a natural phenomenon and does not prevent the parts from working properly.

CORRECT REPLACEMENT OF THE AUXILIARY, SEMI-RAPID AND RAPID BURNER (depending on your model, your cooktop may only have some of these burners - see pages 20, 21)

It is very important to check that the burner flame distributor "**F**" and the cap "**C**" have been correctly positioned (see figs. 3.2, 3.3) - failure to do so can cause serious problems with correct combustion and may cause irreversible damage to the hob surface.

CORRECT REPLACEMENT OF THE DOUBLE-RING COMPACT, DOUBLE-RING AND DUAL BURNER (depending on your model, your cooktop may only have some of these burners - see pages 20, 21)

The burner must be correctly positioned; failure to do so can cause serious problems with correct combustion and may cause irreversible damage to the hob surface.
Fit the flame spreader to the housing as shown by the arrows (see figs. 3.4, 3.5, 3.6).
The burner correctly positioned must not rotate (fig. 3.7).
Then position the cap "**A**" and the ring "**B**" (figs. 3.7, 3.8).

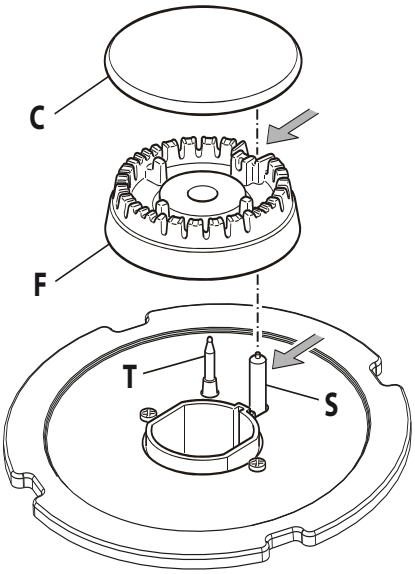

Fig. 3.2

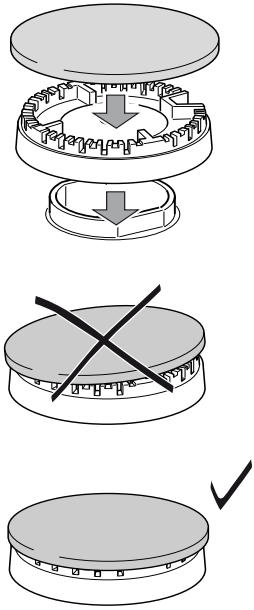

Fig. 3.3

MODELS WITH DOUBLE-RING COMPACT BURNER

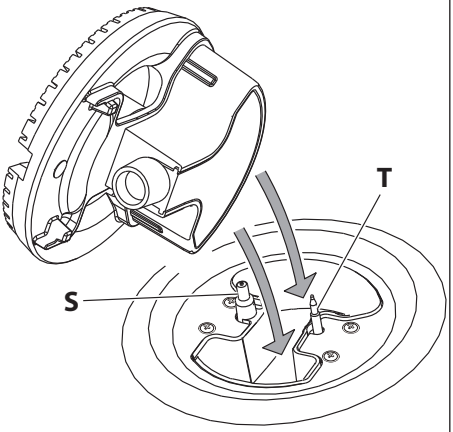

Fig. 3.4

MODELS WITH DOUBLE-RING BURNER

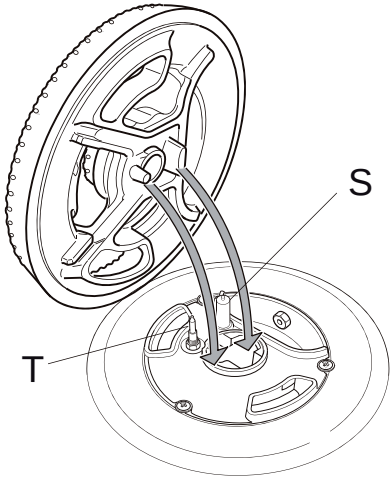

Fig. 3.5

MODELS WITH DUAL BURNER

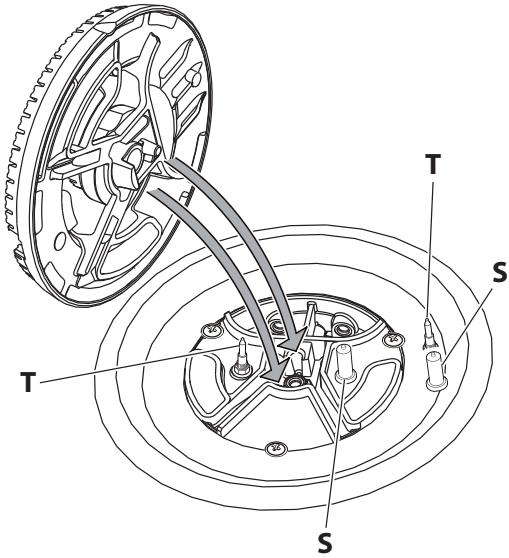

Fig. 3.6

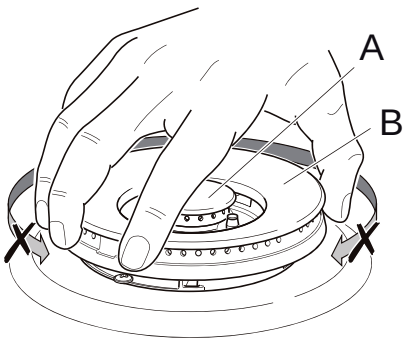

Fig. 3.7

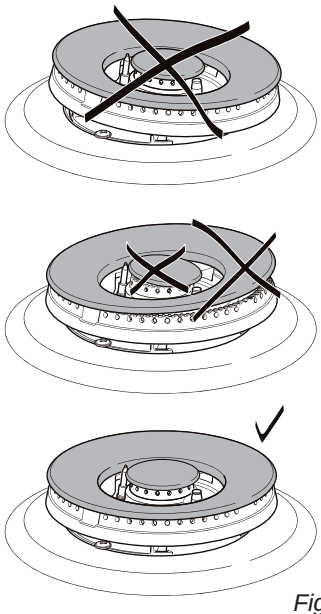

Fig. 3.8

PAN SUPPORTS (Type A)

These parts must be cleaned using a sponge and soapy water or other suitable non-abrasive products. Dry with a soft cloth.

Warning! Not dishwasher safe.

After cleaning, they must be repositioned properly (fig. 3.9).

It is very important to check that the pan supports have been correctly positioned. Failure to do so can cause serious problems.

The pan supports shall be level and must not rotate.

Note: Continuous use may cause a change in the glaze around the burners and grids, corresponding to the areas exposed to the heat. This is a natural phenomenon and does not prevent the parts from working properly.

AUXILIARY, SEMI-RAPID AND RAPID BURNER (depending on your model, your cooktop may only have some of these burners)

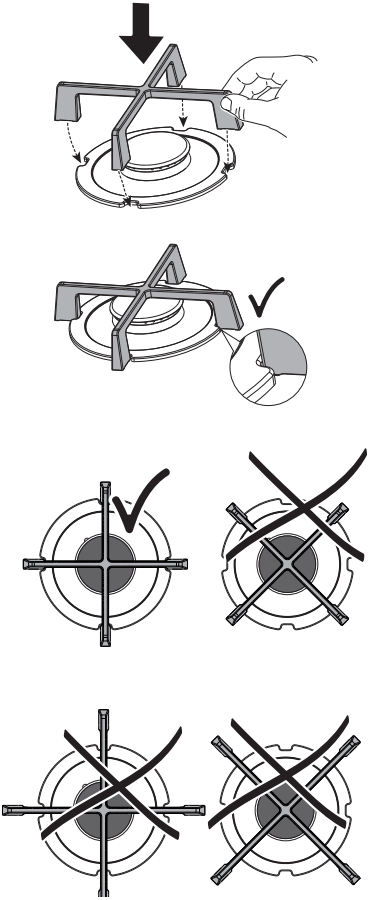

DOUBLE-RING COMPACT, DOUBLE-RING AND DUAL BURNER (depending on your model, your cooktop may only have some of these burners)

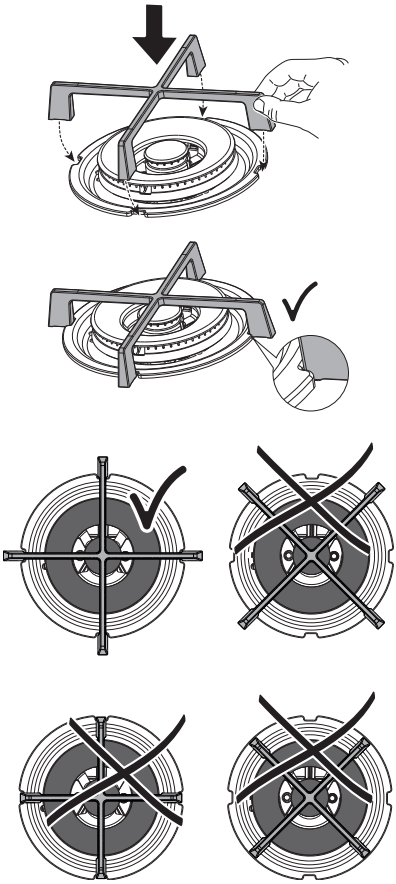

Fig. 3.9

PAN SUPPORTS (Type B)

These parts must be cleaned using a sponge and soapy water or other suitable non-abrasive products. Dry with a soft cloth.

Warning! Not dishwasher safe.

After cleaning, they must be repositioned properly (fig. 3.10).

It is very important to check that the pan supports have been correctly positioned. Failure to do so can cause serious problems.

The pan supports shall be level and must not rotate.

Note: Continuous use may cause a change in the glaze around the burners and grids, corresponding to the areas exposed to the heat. This is a natural phenomenon and does not prevent the parts from working properly.

AUXILIARY, SEMI-RAPID AND RAPID BURNER (depending on your model, your cooktop may only have some of these burners)

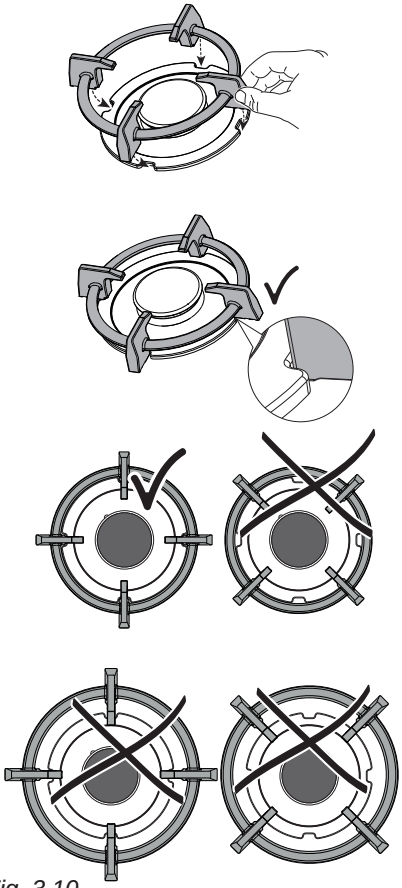

DOUBLE-RING COMPACT, DOUBLE-RING AND DUAL BURNER (depending on your model, your cooktop may only have some of these burners)

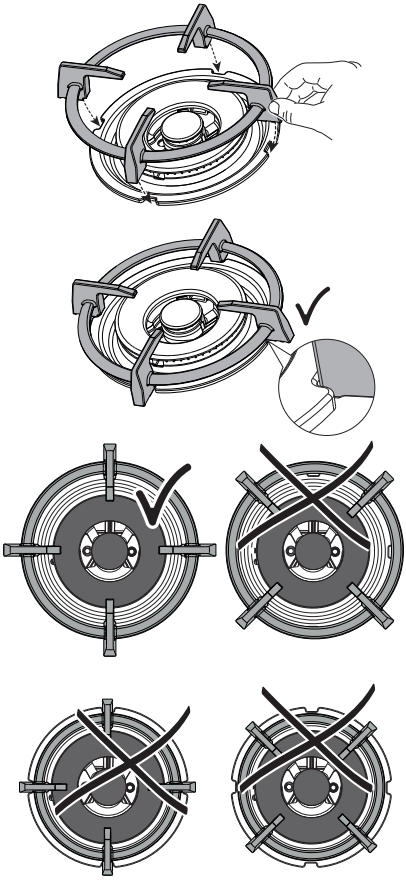

Fig. 3.10

- GUARANTEE FOR UNITED KINGDOM -
THE FOLLOWING INFORMATION ARE FOR THE UNITED KINGDOM ONLY

Your new **"De'Longhi"** product comes with 12-month guarantee covering all parts and labour.

If your appliance proves to be defective as a result of faulty materials or workmanship during the guarantee period, these parts will be repaired or replaced free of charge.

AFTER SALES SERVICE

Should you require service, spares or product information and advice:

- Please Telephone 01908 733 010 (Great Britain)
  028 9744 2461 (Northern Ireland - Mon to Fri 9:00am to 5:00pm
  Excluding Bank Holidays)
- Details of your purchase receipt will be required if you require service within the first 12-month of purchase.

1. The rights and benefits under this guarantee are additional to your statutory rights, which are not affected by this guarantee.
2. The manufacturer undertakes within the specified period, to repair or replace free of charge any parts of the appliance found to be defective provided that:
   - We are promptly informed of the defect.
   - The appliance is installed and used in accordance with the written instructions enclosed with the appliance.
   - The appliance is used only on an electrical supply as indicated on the rating label fixed to the appliance.
   - The appliance has not been altered in any way or subject to misuse or repaired by a person other than an authorised service agent.
3. No rights are given under this guarantee to a person acquiring the appliance second hand or for commercial, semi-commercial or communal use.
4. This guarantee applies throughout the UK and Channel Islands.
5. Any repaired or replacement appliances will be guaranteed on these terms for the unexpired portion of the guarantee.

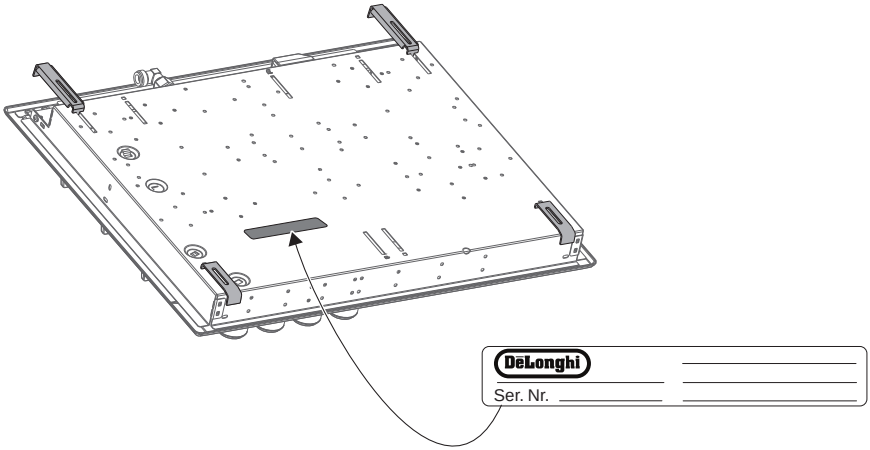

Descriptions and illustrations in this booklet are given as simply indicative. The manufacturer reserves the right, considering the characteristics of the models described here, at any time and without notice, to make eventual necessary modifications for their construction or for commercial needs.

Cod. 1106353/GB - ß0