Hisense

life reimagined

USER'S OPERATION MANUAL

Before operating this unit, please read this manual thoroughly, and retain for future reference

RF632N4AIC1 RF632N4AFC1 RF632N4AIE1

EN

English

Contents

Safety and warning information.....3
Installing your new appliance.....12
Description of the appliance 15
Control Panel.....17
Using your appliance.....21
Helpful hints and tips.....25
Cleaning and Care.....26
Troubleshooting.....28
Disposal of the appliance 29

Safety and warning information

Your safety and the safety of others are very important.

We have provided many important safety messages in this manual and on your appliance. Always read and obey all safety messages.

This is the safety alert symbol.
This symbol alerts you to potential hazards that can kill or hurt you and others. All safety messages will follow the safety alert symbol and either the word "DANGER," "WARNING" or "CAUTION."
These words mean:

DANGER An imminently hazardous situation. You could be killed or seriously injured if you don't immediately follow

WARNING A potentially hazardous situation which, if not avoided, could result in death or serious bodily injury.

CAUTION A potentially hazardous situation which, if not avoided, may result in moderate or minor injury.

All safety messages will tell you what the potential hazard is, tell you how to reduce the chance of injury, and tell you what can happen if the instructions are not followed.

Safety and warning information

For your safety and correct usage, before installing and first using the appliance, read this user manual carefully, including its hints and warnings. To avoid unnecessary mistakes and accidents, it is important to make sure that all people using the appliance are thoroughly familiar with its operation and safety features. Save these instructions and be sure that they remain with the appliance if it is moved or sold, so that anyone using it throughout its life, will be properly informed on its usage and safety notices.

For the safety of life and property, keep the precautions of these user's instructions as the manufacturer is not responsible for damages caused by omission.

Safety for children and others who are vulnerable people

- According to EN standard

  This appliance can be used by children aged from 8 years and above and persons with reduced physical, sensory or mental capabilities or lack of experience and knowledge if they have been given supervision or instruction concerning use of the appliance in a safe way and understand the hazards involved. Children shall not play with the appliance. Cleaning and user maintenance shall not be made by children without supervision. Children aged from 3 to 8 years are allowed to load and unload refrigerating appliances.

- According to IEC standard

  This appliance is not intended for use by persons (including children) with reduced physical sensory or mental capabilities, or lack of experience and knowledge, unless they have been given supervision or instruction concerning use of the appliance by a person responsible for their safety.

- Children should be supervised to ensure that they do not play with the appliance.

- Keep all packaging away from children as there is risk of suffocation.

- If you are discarding the appliance, pull the plug out of the socket, cut the connection cable (as close to the appliance as you can) and remove the door to prevent children playing from suffering an electric shock or from closing themselves inside it.

- If this appliance, featuring a magnetic door seals, is to replace an older appliance having a spring lock (latch) on the door or lid, be sure to make the spring lock unusable before you discard the old appliance. This will prevent it from becoming a death trap for a child.

General safety

- WARNING —This appliance is intended to be used in residential household and similar applications such as
  -staff kitchen areas in shops, offices and other working environments;
  -farm houses and by clients in hotels, motels and other residential type environments;
  -bed and breakfast type environments;
  -catering and similar non-retail applications.
- WARNING — Do not store explosive substances such as aerosol cans with a flammable propellant in this appliance.
- WARNING — If the supply cord is damaged, it must be replaced by the manufacturer, its service agent or similarly qualified persons in order to avoid a hazard.
- WARNING — Keep ventilation openings, in the appliance enclosure or in the built-in structure, clear of obstruction.
- WARNING — Do not use mechanical devices or other means to accelerate the defrosting process, other than those recommended by the manufacturer.
- WARNING — Do not damage the refrigerant circuit.
- WARNING — Do not use electrical appliances inside the food storage compartments of the appliance, unless they are of the type recommended by the manufacturer.
- WARNING — The refrigerant and insulation blowing gas are flammable. When disposing of the appliance, do so only at an authorized waste disposal centre. Do not expose to flame.
- WARNING —When positioning the appliance, ensure the supply cord is not trapped or damaged.

- WARNING —Do not locate multiple portable socket-outlets or portable power supplies at the rear of the appliance.
- WARNING —Food needs to be packed in bags before putting into the refrigerator, and liquids need to be packed in bottles or containers to avoid the problem that the product design structure is not easy to clean.

The symbol is a warning and indicates the refrigerant and insulation blowing gas are flammable.

Warning: Risk of fire / flammable materials

Replacing the illuminating lamps

- WARNING—The illuminating lamps must not be replaced by the user! If the illuminating lamps is damaged, contact the customer helpline for assistance.This warning is only for refrigerators that contain illuminating lamps.

Refrigerant

The refrigerant isobutene (R600a) is contained within the refrigerant circuit of the appliance, a natural gas with a high level of environmental compatibility, which is nevertheless flammable. During transportation and installation of the appliance, ensure that none of the components of the refrigerant circuit becomes damaged.

The refrigerant (R600a) is flammable.

- WARNING — Refrigerators contain refrigerant and gases in the insulation. Refrigerant and gases must be disposed of professionally as they may cause eye injuries or ignition. Ensure that tubing of the refrigerant circuit is not damage prior to proper disposal.

WARNING: risk of fire

If the refrigerant circuit should be damaged:

- Avoid opening flames and sources of ignition.
- Thoroughly ventilate the room in which the appliance is situated.

It is dangerous to alter the specifications or modify this product in any way.

Any damage to the cord may cause a short circuit, fire, and/or electric shock.

Electrical safety

- The power cord must not be lengthened.
- Make sure that the power plug is not crushed or damaged. A crushed or damaged power plug may overheat and cause a fire.
- Make sure that you can access the main plug of the appliance.
- Do not pull the main cable.
- If the power plug socket is loose, do not insert the power plug. There is a risk of electric shock or fire.
- You must not operate the appliance without the interior lighting lamp cover.
- The fridge is only applied with power supply of single phase alternating current of 220~240V/50Hz. If fluctuation of voltage in the district of user is so large that the voltage exceeds the above scope, for safety sake, be sure to apply A.C. Automatic voltage regulator of more than 350W to the fridge. The fridge must employ a special power socket instead of common one with other electric appliances. Its plug must match the socket with ground wire.

Daily use

- Do not store flammable gass or liquids in the appliance,There is a risk of an explosion.
- Do not operate any electrical appliances in the appliance (e.g.electric ice cream makers,mixers etc.).
- When unplugging always pull the plug from the mains socket,do not pull on the cable.
- Do not place hot items near the plastic components of this appliance.
- Do not place food products directly against the air outlet on the rear wall.
- Store pre-packed frozen food in accordance with the frozen food manufacture's instructions.
- The appliances manufactures storage recommendations should be strictly adhered to.Refer to relevant instructions for storage.
- Do not place carbonated or fizzy drinks in the freeze compartment as it creates pressure on the container,which may cause it to explode,resulting in damage to the appliance.
- Frozen food can cause frost burns if consumed straight from the freezer compartment.
- Do not place the appliance in direct sunlight.
- Keep buring candles,lamps and other items with naked flames away from the appliance so that do not set the appliance on fire.
- The appliance is intended for keeping food stuff and/ or beverages in normal household as explained in this instruction booklet The appliance is heavy.Care should be taken when moving it.

- Do not remove nor touch items from the freezer compartment if your hands are damp/wet, as this could cause skin abrasions or frost/freezer burns.
- Never use the base, drawers, doors etc. to stand on or as supports.
- Frozen food must not be refrozen once it has been thawed out.
- Do not consume ice popsicles or ice cubes straight from the freezer as this can cause freezer burn to the mouth and lips.
- To avoid items falling and causing injury or damage to the appliance, do not overload the door racks or put too much food in the crisper drawers.
- This refrigerating appliance is not intended to be used as a built-in appliance .

Caution!
Care and cleaning

- Before maintenance, switch off the appliance and disconnect the mains plug from the mains socket.
- Do not clean the appliance with metal objects, steam cleaner, ethereal oils, organic solvents or abrasive cleansers.
- Do not use sharp objects to remove frost from the appliance. Use a plastic scraper.

Installation Important!

- For electrical connection carefully, follow the instructions given in this manual.
- Unpack the appliance and check if there are damages on it. Do not connect the appliance if it is damaged. Report possible damages immediately to the place you bought it. In this case retain packing.

- It is advisable to wait at least four hours before connecting the appliance to allow the oil to flow back in the compressor.
- Adequate air circulation should be around the appliance, lacking this leads to overheating.To achieve sufficient ventilation, follow the instructions relevant to installation.
- Wherever possible the back of the product should not be too close to a wall to avoid touching or catching warm parts (compressor,condenser) to prevent the risk of a fire, follow the instructions relevant to installation.
- The appliance must not be locate close to radiators or cookers.
- Make sure that the mains plug is accessible after the installation of the appliance

Service

- Any electrical work required to do the servicing of the appliance should be carried out by qualified electrician or competent person.
- This product must be serviced by an authorized Service Center, and only genuine spare parts must be used.

1. If the appliance is Frost Free.
2. If the appliance contains freezer compartment.

To avoid contamination of food, please respect the following instructions

- Opening the door for long periods can cause a significant increase of the temperature in the compartments of the appliance.
- Clean regularly surfaces that can come in contact with food and accessible drainage systems.
- Store raw meat and fish in suitable containers in the refrigerator, so that it is not in contact with or drip onto other food.
- Two-star frozen-food compartments are suitable for storing pre-frozen food, storing or making icecream and making ice cubes.
- One-, two- and three-star compartments are not suitable for the freezing of fresh food.

Installing your new appliance

Before using the appliance for the first time, you should be informed of the following tips.

Warning!

For proper installation, this refrigerator must be placed on a level surface of hard material that is the same height as the rest of the flooring.This surface should be strong enough to support a fully loaded refrigerator.

The rollers, which are not castors, should be only used for forward or backward movement. Moving the refrigerator sideways may damage your floor and the rollers.

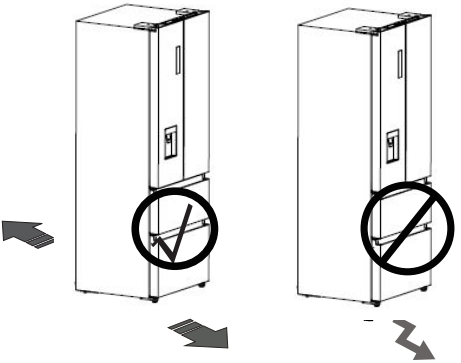

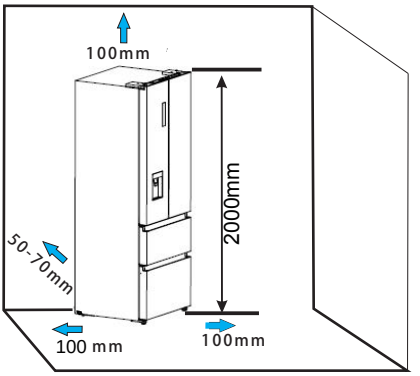

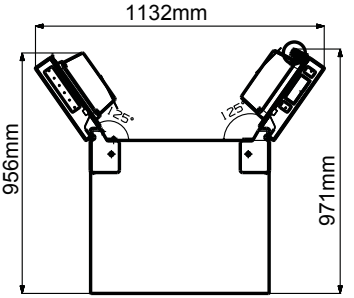

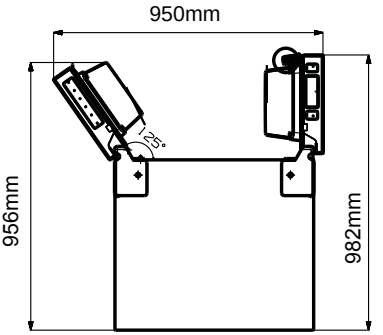

Ventilation of appliance

In order to improve efficiency of the cooling system and save energy, it is necessary to maintain good ventilation around the appliance for the dissipation of heat. For this reason, sufficient clear space should be available around the refrigerator.

Suggest:

It is advisable for there to be 50-70mm of space from the back to the wall, at least 100mm from its top, at least 100mm from its side to the wall and a clear space in front to allow the doors to open 130°. As shown in follow diagrams.

Note:

• This application perform well from SN to T
The Appliance may not work properly if it is left for a longer period at a temperature above or below the indicated range.

Climate class	Ambient temperature
SN	+10°C to +32°C
N	+16°C to +32°C
ST	+16°C to +38°C
T	+16°C to +43°C

- Stand your appliance in a dry place to avoid high moisture.
- Keep the appliance out of direct sunlight rain or frost. Stand the appliance away from heat sources such as stoves, fires or heaters.

Leveling of appliance

For sufficient leveling and air circulating in the lower rear section of the appliance, the bottom feet may need to be adjusted. You can adjust them manually by hand or by using a suitable spanner.

To allow the doors to self-close, tilt the top backwards by 10-15mm.

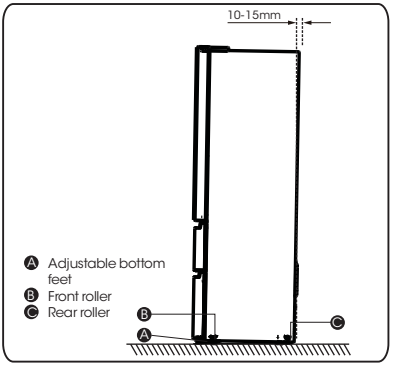

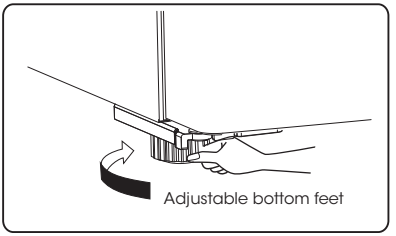

Disassembling the freezer drawer

1. The freezer compartment is provided with an upper drawer, a lower drawer , two trays and an ice box;
2. Open the freezer door; Pull up the adjusting block (A) of the slide guides, and pull out the freezer door drawer (A) to the final position.

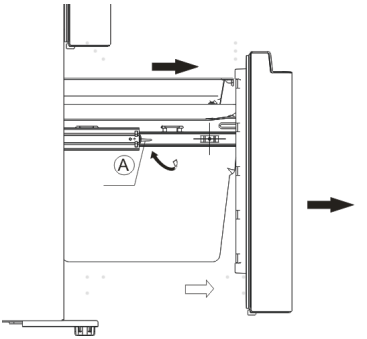

3. Take out the tray (B) by lifting it up in the direction of the arrow.

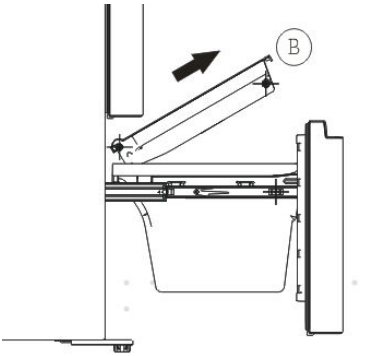

4. Remove the lower freezer drawer (C) by lifting it up.

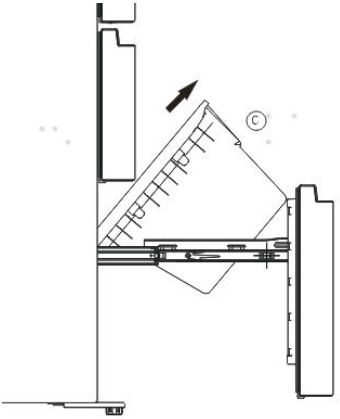

Re-assembling the freezer drawer

To reattach the drawer after you moved the appliance to its final location, assemble the parts in reverse order.

Installing the lower drawer

1. **Push down the lower drawer to the final position in the direction of the arrow.**

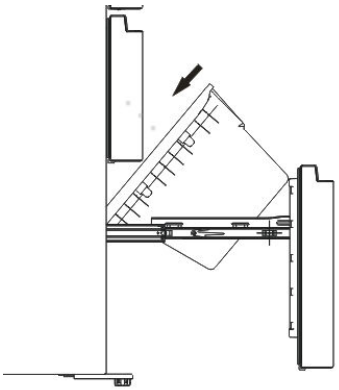

2. **Put the tray on the drawer and push it award and ensure the tray's rollers on the freezer liner (D)'s fillets.**

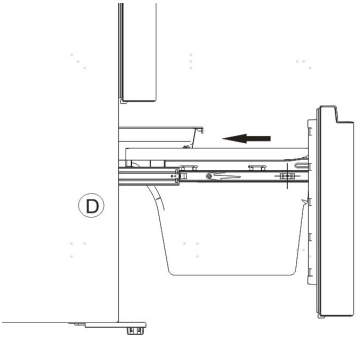

3. Push the freezer door along the arrow and close it.

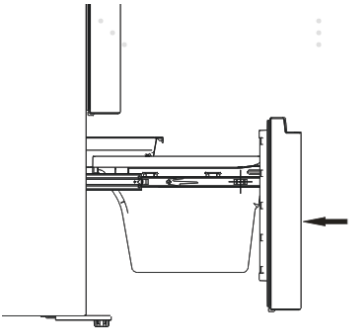

Description of the appliance

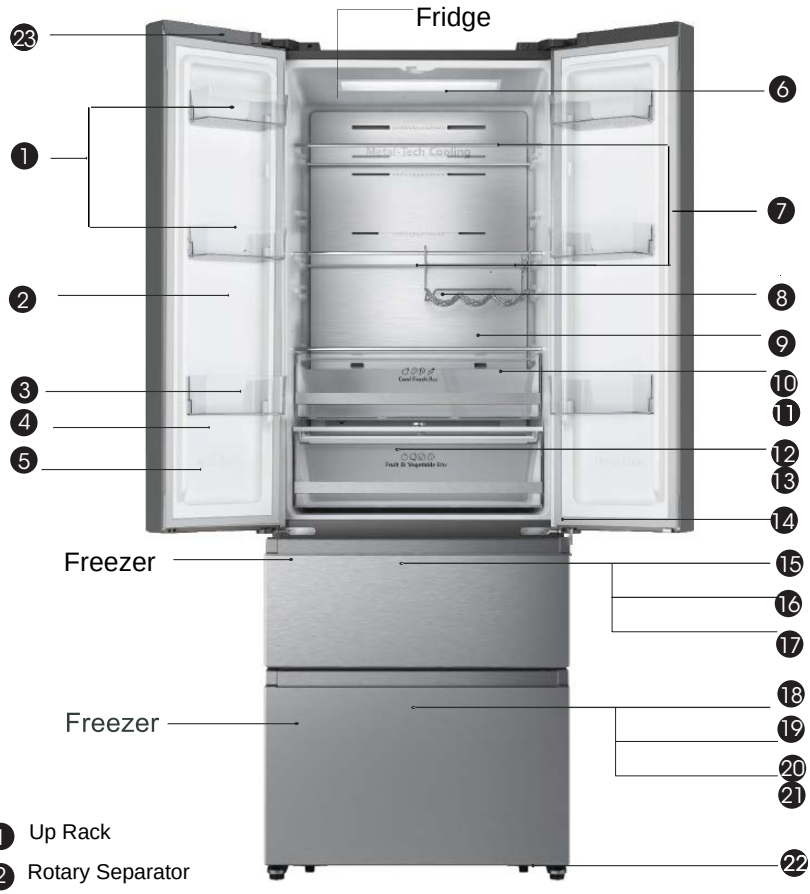

1. Up Rack
2. Rotary Separator
3. Middle Rack
4. Fridge Gasket
5. R1-room Door
6. LED light
7. Glass shelf
8. Flexible wine rack(optional)
9. Wind Chanel
10. Cool Fresh Box cover
11. Cool Fresh Box
12. Crisper cover
13. Fruit & Vegetable Crisper
14. R2-room Door
15. F1-room Door
16. Tray Part
17. Freezer Upper Dawer
18. F2-room Door
19. Tray Part
20. Freezer Lower Drawer
21. Ice Box
22. Adjustable bottom feet
23. Wi-Fi Module

Note: Your model may look different from this and other images in this manual, depending on your model's features.
Note: To get the best energy efficiency of this product, please place all shelves, drawers on their original position as the illustration above.

Description of the appliance

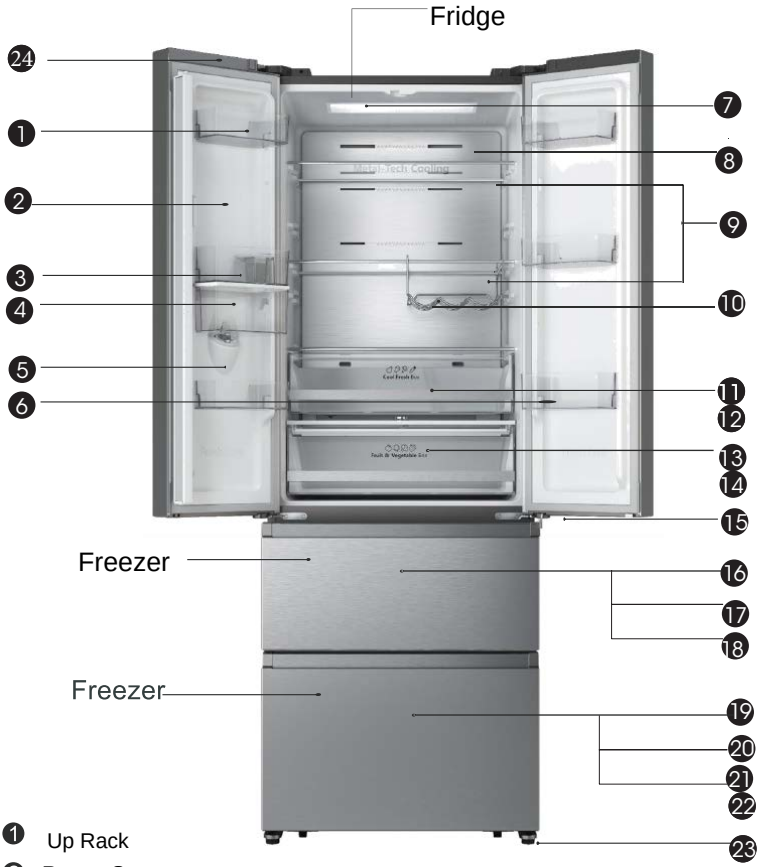

1. Up Rack
2. Rotary Separator
3. Middle Rack Part
4. Water storage box part
5. Fridge Gasket
6. Middle Rack
7. LED light
8. Wind Chanel
9. Glass shelf
10. Flexible wine rack(optional)
11. Cool Fresh Box cover
12. Cool Fresh Box
13. Crisper cover
14. Fruit & Vegetable Crisper
15. R2-room Door
16. F1-room Door
17. Tray Part
18. Freezer Upper Dawer
19. F2-room Door
20. Tray Part
21. Freezer Lower Drawer
22. Ice Box
23. Adjustable bottom feet
24. Wi-Fi Module

Note: Your model may look different from this and other images in this manual, depending on your model's features.
Note: To get the best energy efficiency of this product, please place all shelves, drawers on their original position as the illustration above.

Control panel

Use your appliance according to the following control regulations, your appliance has the corresponding functions and modes as the control panels showed in the pictures below.

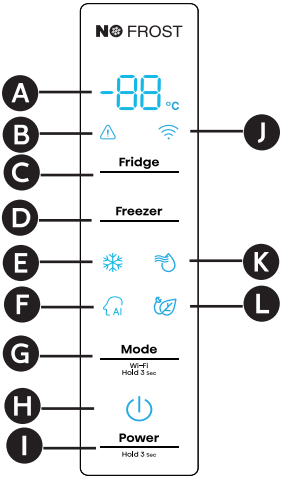

- A Temperature Setting
- B Door Alarm
- C Fridge Button
- D Freezer Button
- E Super Freeze Icon
- F Fuzzy Icon
- G Mode Button
- H Standby Icon
- I Power Button
- J Wi-Fi Icon
- K Super Cool Icon
- L Energy Saving Icon

NOTE

•Once the appliance is powered on, all icons on the display panel will be lit for 3 seconds with a buzzer sound.
•All the icons will go off on the condition of all keys untouched and all doors closed for one minute.
•The control panel will light up when the fridge door is open or you touch any button.

Caution!

The temperature only means the average temperature of the whole refrigerator cabinet. Temperatures inside each compartment may vary from those displayed on the panel, depending on how much food stored and where the refrigerator is placed. In addition, the actual temperature from higher room and lower room will be different.
NOTE: Setting the refrigerator running at high temperature will accelerate food decomposition. For optimum food preservation, we recommend that when starting the refrigerator for the first time, the temperature of fridge is set to 4 ℃, and that of the freezer to -18℃.

Door Alarm

Opening the fridge door for over 2 minutes will trigger door alarm. The "⚠" icon starts to blink and the buzzer rings 3 times per minute. Closing all the doors, the "⚠" icon will go off and buzzing will stop. In addition, door alarm will stop automatically after 10 minutes.

Fridge Fridge Temperature Setting

Touch the "Fridge" key to activate the temperature setting function of fridge. After that, touch the key continuously, the temperature will be set according to the following sequence:

8°C — 7°C — 6°C — 5°C
2°C — 3°C — 4°C

Freezer — Freezer Temperature Setting

Touch the "Freezer" key to activate the temperature setting function of freezer. After that, touch the key continuously, the temperature will be set according to the following sequence:

-14°C — -15°C — ·····
-24°C — -23°C

Mode — Mode Setting

Wi-Fi
Hold 3 Sec

Each time you press the "Mode" button, the refrigerator mode will switch from the current mode (if not, start from Fuzzy), and switch between Fuzzy - Super Freeze - Super Cool - Energy Saving - Fuzzy 4 modes in turn, the corresponding icon lights up, and the temperature display area displays the corresponding set temperature. Exit the relevant mode when setting the refrigerating and freezing temperature.

Fuzzy

The refrigerator works in the way that is most conducive to the preservation and storage of food.
NOTE: In Fuzzy mode, the set temperatures of the refrigerator compartment and freezer compartment are 4℃ and -18℃ respectively.

Super Freeze

Use this mode when you want to quickly freeze food that has just been placed in the freezer.
NOTE: If the freezing capacity according to the rating plate is to be used,switch on Super Freezer at least 24 hours before the fresh products are placed in the freezer compartment. In the Super Freeze mode, the set temperature of the freezer compartment is -24℃, the refrigerator compartment still operates at the set temperature before entering the Super Freeze mode, and automatically exits after 52 hours of operation.

Super Cool

This mode can be used when you want to quickly cool down the food you put in the refrigerator.
NOTE: In the Super Cool mode, the set temperature of the refrigerator compartment is 2℃, and the freezer compartment still operates at the set temperature before entering the Super Cool mode, and automatically exits after 6 hours of operation.

Energy Saving

NOTE: In the Energy Saving mode, the set temperatures of the refrigerator compartment and the freezer compartment are 6℃ and -17℃ respectively.

Standby

Press the "Power" button for 3 seconds to enter/exit the standby function.
NOTE: When the refrigerator enters the standby function, the refrigerator will stop cooling and the temperature setting area will display "--" .

Wi-Fi function

This appliance may be controlled remotely with a smart phone or a tablet computer. If the appliance is not connected to the home network, it will function like a regular appliance.

What do you need to connect the appliance?

• Signal from the local wireless network (Wi-Fi) should be sufficiently strong in the spot where the appliance is installed.
• Home network router has to be connected to the internet, and the Wi-Fi function on the appliance should be activated.
• The smart phone/tablet computer has to be connected to the internet.
• Operating system on your smart phone/tablet computer should be compatible with the ConnectLife app.

ConnectLife App

The ConnectLife App is available to download free of charge from the Apple App Store or from the Google Play Store.

Installing the ConnectLife app

1. Go to the App Store (on Apple devices), AppGallery (on Huawei devices) or Google Play store (on Android devices) on your phone/tablet computer.
2. Search for "ConnectLife" .
3. Choose the ConnectLife app and install it on your smart phone/tablet computer.

INFORMATION!

We recommend downloading and installing the mobile app and creating a ConnectLife account before attempting to set up the connection with your appliance.

CONNECT APPLIANCE TO WIFI

After activating the Wi-Fi function, connect your device to your home router in order to connect your appliance with the ConnectLife mobile app.

Step 1: Set the appliance to normal operation. Touch the Mode key for approximately 3 seconds. You entered network connection menu when'--'appears in the display.

Step 2: Touch the Fridge key to select 'O' within 60 seconds.

Step 3: Touch the Mode key to confirm the selection mode. The Wi-Fi symbol starts blinking and the network of this appliance is now open to connect to, for 5 minutes.

Step 4: When the Wi-Fi symbol is on, it means that the Wi-Fi connection is successful. The display will return to normal.

PAIR APPLIANCE

The appliance can be paired with your mobile device. Simply pair another user to your appliance. This requires, that your appliance was already set up before and is connected to your home network. If not, go back and select CONNECTION SETUP.

Step 1: Set the appliance to normal operation. Touch the Mode key for approximately 3 seconds. You entered network connection menu when'--'appears in the display.

Step 2: Touch the Fridge key to select 'P' within 60 seconds.

Step 3: Touch the Mode key to confirm the selection mode. The PAIR network of this appliance is now open to connect to, for 5 minutes.

Step 4: When the display will return to normal, it means the PAIR connection is successful.

UNBIND ALL PAIR APPLIANCE

By activating this function, the appliance will be removed from all paired app user accounts.
Step 1: Set the appliance to normal operation. Touch the Mode key for approximately 3 seconds. You entered network connection menu when'--'appears in the display.

Step 2: Touch the Fridge key to select '88' within 60 seconds.

Step 3: Touch the Mode key to confirm the selection mode to realize unbinding.

Step 4: After the device is unbound, it will automatically enter the distribution network state, the Wi-Fi icon flashes, and the distribution network time is up to 5 minutes.

Using your appliance

Your appliance has the accessories as the"Description of the appliance" showed in general, with this part instruction you can have the right way to use them.. We recommend that you read through them carefully before using the appliance.

Door rack

- It is suitable for the storage of eggs, canned liquid, bottled drinks and packed food, etc. Do not place too many heavy things in the racks.
- The door racks can be placed at different heights according to your requirements. Please take food out of the shelf before lifting vertically to reposition.

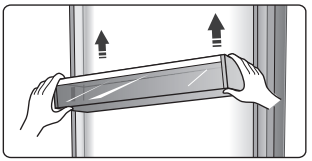

- All the door racks are completely removable for cleaning.

Shelf in Refrigerator chamber

- The shelves in refrigerator chamber can be taken out to be cleaned.

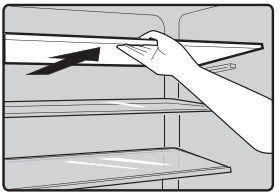

Flexible wine rack(optional)

- It is for storing bottled wine or drinks, and it can be taken out to clean.

Note: Do not place the bottled wine or drinks directly in front of the air outlet on the wind channel, which may cause it to freeze.

Cool fresh box

- In certain mode, there will be an extra fresh box(drawer). In this drawer you can get a lower temperature to store fish, meat and other erodible food.
Normally it will be about 1°C lower than the other part of the fresh compartment. There are some commendations in the below table which you can consult.

temp. setting of fridge compartment	type of food	suggested storage period
2 or 3 or 4°C	fish or meat	≤2days
5 or 6°C	fruit	＜2weeks
7 or 8°C	vegetables	<5days

Note: The actual temperature of Cool fresh box may lower than zero, so it is normal that liquid in this drawer was frozen.

Fruit & Vegetable crisper

- The crisper is suitable for storage of vegetables and fruit, etc.

Crisper and Humidity control

- You can rotate the knob on the crisper cover to keep different humidity in the crisper. Push the knob to the left, you will keep a higher humidity which can storage vegetable and fruit long and fresh, to the right will be lower humidity. It is for controlling the temperature of the crisper and avoiding the vegetable losing moisture.

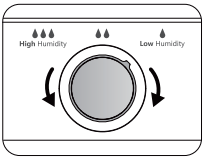

Freezer drawer

- It is used to store food which need to be frozen, including meat, fish and ice cream, etc.

ice tray

● It is used to make ice cubes. To make ice cubes, please fill water into the ice cube trays and the water level shall not exceed the top line(ideally eighty percent of the ice tray volume). Place the tray into the freezer compartment. and wait at least two hours for the ice cubes to be formed. After the cubes are formed, gently twist the tray to separate the cubes and trays.

Note: If the ice tray is used for the first time or has not been used for a long time, please clean it before using.

Water Dispenser(only for appliance with dispenser)

The water dispenser, located in the fridge door, is for storing drinking water. With this appliance you can obtain chilled water easily without opening the refrigerator. You should review of following tips.

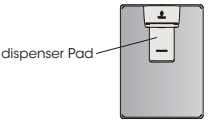

- **Before using**

➢ Before using this appliance for the first time, you should use it as follows.

1.Hold one bottom side of the door rack by a hand, lift up the opposite side by the other hand, when the slot of the door rack is off from the guide, change hands to repeat these steps.

2.Hold one bottom side of the water tank by a hand, lift up the opposite side by the other hand, when the slot of the water tank is off from the guide, change hands to repeat these steps.

3.Hold the two side of the water tank tightly, lift up and put out of the water tank.
4.Unsrew the head, then clean head, lids and the water tank.

Caution!
Drain the water tank before you take it down

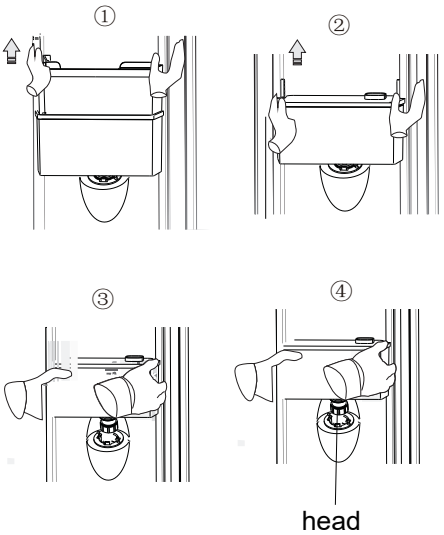

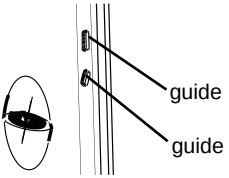

- **Assembling**

After cleaning, please assemble the parts including the head, water tank and lids as follows:
1. Put the seal ring in order first (the seal ring can not turn up), then insert the head into the hole.
2. Hold the two sides of the water tank tightly, fit the water tank along the guids on the door.
3. Push the two sides of the water tank downward as the picture shows.
4. When you hear clicks by both sides and e at the same time the both sides of the wate tank is closed to the door liner, It means th installation is completed.
then put on the middle rack well .

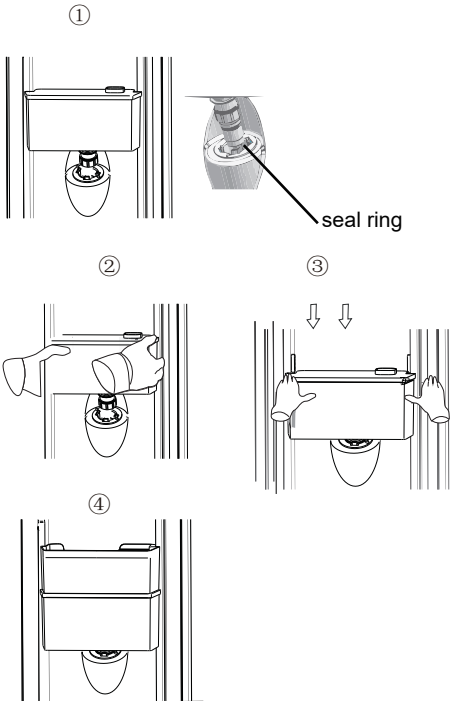

- **Filling water**

Before you fill the drinking water into the water tank, ensure that the water tank is steady and in a correct position.

Caution!

Fill with water up to 2.5 L (which is suggested) and not above the level. Otherwise, it may overflow when the lids is closed.

We recommend that you fill the water by the following way.

Open the small lid and fill water from the inlet of the middle rack.

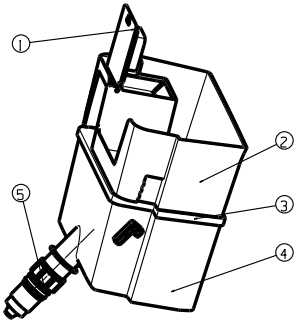

① water supply inlet cover ② middle rack

③ water storage box cover

④ water sotorage box

⑤ head

Warning!

Don't touch the other parts of the appliance when filling water, it may cause the water leakage.

Please pour water slowly,or the water will overflow.

Receiving water

➢ You should use the correct cups to receive water underneath the water dispenser.

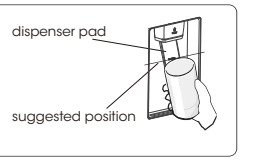

Warning!

➢ Don't push the dispenser lever forward without cup, it may cause the water leak from the dispenser.

Order	Compartments Type	Target storage temp.[°C]	Appropriate food
1	Fridge	+2~+8	Eggs, cooked food, packaged food, fruits and vegetables, dairy products, cakes, drinks and other foods which are not suitable for freezing.
2	(***)*-Freezer	≤-18	Seafood (fish, shrimp, shellfish), freshwater aquatic products and meat products (recommended for 3 months , the longer the storage time, the worse the taste and nutrition), suitable for frozen fresh food.
3	***-Freezer	≤-18	Seafood (fish, shrimp, shellfish), freshwater aquatic products and meat products (recommended for 3 months, the longer the storage time, the worse the taste and nutrition), are not suitable for frozen fresh.
4	**-Freezer	≤-12	Seafood (fish, shrimp, shellfish), freshwater aquatic products and meat products (recommended for 2 months, the longer the storage time, the worse the taste and nutrition), are not suitable for frozen fresh. food.
5	*-Freezer	≤-6	Seafood (fish, shrimp, shellfish), freshwater aquatic products and meat products (recommended for 1 month, the longer the storage time, the worse the taste and nutrition).
6	0-star	-6~0	Fresh pork, beef, fish, chicken, some packaged processed foods, etc. (Recommended to eat within the same day, preferably no later than 3 days) . Partially encapsulated processed foods (non-freezable foods)
7	Chill	-2~+3	Fresh/frozen pork, beef, chicken, freshwater aquatic products, etc. (7 days below 0°C and above 0°C is recommended for consumption within that day, preferably no more than 2 days). Seafood (less than 0°C for 15 days, it is not recommended to store above 0°C)
8	Fresh Food	0~+4	Fresh pork, beef, fish, chicken, cooked food, etc. (Recommended to eat within the same day, preferably no more than 3 days)
9	Wine	+5~+20	red wine, white wine, sparkling wine etc.

Note: please store different foods according to the compartments or target storage temperature of your purchased products.

- If the refrigerating appliance is left empty for long periods, switch off, defrost, clean, dry, and leave the door open to prevent mould developing within the appliance.

Helpful hints and tips

Energy saving tips

We recommend that you follow the tips below to save energy.

- Try to avoid keeping the door open for long periods in order to conserve energy.
- Ensure the appliance is away from any sources of heat (Direct sunlight, electric oven or cooker etc)
- Don't set the temperature colder than necessary.
- Don't store warm food or evaporating liquid in the appliance.
- Place the appliance in a well ventilated, humidity free, room. Please refer to Installing your new appliance chapter.
- If the diagram shows the correct combination for the drawers, crisper and shelves, do not adjust the combination as this is designed to be the most energy efficient configuration.

Hints for fresh food refrigeration

- Do not place hot food directly into the refrigerator or freezer, the internal temperature will increase resulting in the compressor having to work harder and will consume more energy.
- Do cover or wrap the food, particularly if it has a strong flavor.
- Place food properly so that air can circulate freely around it.

Hints for refrigeration

- Meat (All Types) Wrap in polythene food: wrap and place on the glass shelf above the vegetable drawer. Always follow food storage times and use by dates suggested by manufacturers.
- Cooked food, cold dishes, etc.:

  They should be covered and may be placed on any shelf.
- Fruit and vegetables:

  They should be stored in the special drawer provided.
- Butter and cheese:

  Should be wrapped in airtight foil or plastic film wrap.
- Milk bottles:

  Should have a lid and be stored in the door racks.

Hints for freezing

- When first starting up or after a period out of use, let the appliance run at least 2 hours on the higher settings before putting food in the compartment.
- Prepare food in small portions to enable it to be rapidly and completely frozen and to make it possible to subsequently thaw only the quantity required.
- Wrap up the food in aluminum foil or polyethylene food wraps which are airtight.
- Don't allow fresh, unfrozen food to touch the food which is already frozen to avoid temperature rise of the latter.
- Iced products, if consumed immediately after removal from the freezer compartment, will probably cause frost burns to the skin.
- It is recommended to label and date each frozen package in order to keep track of the storage time.

Hints for the storage of frozen food

- Ensure that frozen food has been stored correctly by the food retailer.
- Once defrosted, food will deteriorate rapidly and should not be re-frozen. Do not exceed the storage period indicated by the food manufacturer.

Switching off your appliance

If the appliance needs to be switched off for an extended period, the following steps should be taken prevent mould on the appliance.

1. Remove all food.
2. Remove the power plug from the mains socket.
3. Clean and dry the interior thoroughly.
4. Ensure that all the doors are wedged open slightly to allow air to circulate.

Cleaning and care

For hygienic reasons the appliance (including exterior and interior accessories) should be cleaned regularly (at least every two months).

Warning!

- The appliance must not be connected to the mains during cleaning as there is a danger of electrical shock! Before cleaning switch the appliance off and remove the plug from the mains socket.

Exterior cleaning

- To maintain good appearance of your appliance, you should clean it regularly.
- Wipe the control panel with a clean, soft cloth.
- Spray water onto the cleaning cloth instead of spraying directly on the surface of the appliance. This helps ensure an even distribution of moisture to the surface.
- Clean the doors, handles and cabinet surfaces with a mild detergent and then wiped dry with a soft cloth.

Caution!

- Don't use sharp objects as they are likely to scratch the surface.
- Don't use Thinner, Car detergent, Clorox, ethereal oil, abrasive cleansers or organic solvent such as Benzene for cleaning. They may damage the surface of the appliance and may cause fire.

Interior cleaning

- You should clean the appliance interior regularly. It will be easier to clean when food stocks are low. Wipe the inside of the fridge freezer with a weak solution of bicarbonate of soda, and then rinse with warm water using a wrung-out sponge or cloth. Wipe completely dry before replacing the shelves and baskets. Thoroughly dry all surfaces and removable parts before putting them back into place.

- Although this appliance automatically defrosts, a layer of frost may occur on the freezer compartment's interior walls if the freezer door is opened frequently or kept open too long. If the frost is too thick, choose a time when the freezer is nearly empty and proceed as follow:

  1. Remove existing food and accessories baskets, unplug the appliance from the mains power and leave the doors open. Ventilate the room thoroughly to accelerate the process.

  2. When defrosting is completed, clean your freezer as described above.

Caution!

- Don't use sharp objects to remove frost from the freezer compartment. Only after the interior is completely dry should the appliance be switched back on and plugged back into the mains socket.

Door seals cleaning

- Take care to keep door seals clean. Sticky food and drinks can cause seals to stick to the cabinet and tear when you open the door. Wash seal with a mild detergent and warm water. Rinse and dry it thoroughly after cleaning.

Caution!

- Only after the door seals are completely dry should the appliance be powered on .

Replacing the LED light:
Warning:

- The LED light should be replaced by a competent person. If the LED light is damaged, contact the customer helpline for assistance. To replace the LED light, the below steps can be followed:

1. Unplug your appliance.
2. Remove light cover by pushing up and out.
3. Hold the LED cover with one hand and pull it with the other hand while pressing the connector latch.
4. Replace LED light and snap it correctly in place.

Note: This product contains a light source of energy efficiency class <G>.

Water dispenser cleaning (special for water dispenser products):

- Clean water tanks if they have not been used for 48h; flush the water system connected to a water supply if water has not been drawn for 5 days.

Troubleshooting

If you experience a problem with your appliance or are concerned that the appliance is not functioning correctly, you can carry out some easy checks before calling for service, please see below.

Warning! Don't try to repair the appliance yourself. If the problem persists after you have made the checks mentioned below, contact a qualified electrician, authorized service engineer or the shop where you purchased the product.

Problem:	Possible cause & Solution
Appliance is not working correctly	➢ Check whether the power cord is plugged into the power outlet properly. ➢ Check the fuse or circuit of your power supply, replace if necessary. ➢ The ambient temperature is too low. Try setting the chamber temperature to a colder level to solve this problem. ➢ It is normal that the freezer is not operating during the automatic defrost cycle, or for a short time after the appliance is switched on to protect the compressor.
Odours from the compartments	➢ The interior may need to be cleaned. ➢ Some food, containers or wrapping cause odours.
Noise from the appliance	The sounds below are quite normal: ➢ Compressor running noises. ➢ Air movement noise from the small fan motor in the freezer compartment or other compartments. ➢ Gurgling sound similar to water boiling. ➢ Popping noise during automatic defrosting. ➢ Clicking noise before the compressor starts. Other unusual noises are due to the reasons below and may need you to check and take action: ➢ The cabinet is not level. ➢ The back of appliance touches the wall. ➢ Bottles or containers knocking against each other.
The motor runs continuously	It is normal to frequently hear the sound of the motor, it will need to run more during following circumstances: ➢ Temperature setting is set colder than necessary. ➢ Large quantity of warm food has recently been stored within the appliance. ➢ The temperature outside the appliance is too high. ➢ Doors are kept open too long or too often. ➢ After your installing the appliance or it has been switched off for a long time.

Problem:	Possible cause & Solution
A layer of frost occurs in the compartment	➢ Check that the air outlets are not blocked by food and ensure food is placed within the appliance to allow sufficient ventilation. Ensure the door can be fully closed. To remove the frost, please refer to the cleaning and care chapter.
Temperature inside is too warm	➢ You may have left the doors open too long or too frequently; or the doors are kept open by some obstacle; or the appliance is located with insufficient clearance at the sides, back and top.
Temperature inside is too cold	➢ Increase the temperature by following the" Control Panel" chapter.
Doors can't be closed easily	➢ Check whether the top of the refrigerator is tilted back by 10-15mm to allow the doors to self close, or if something inside is preventing the doors from closing.

Disposal of the appliance

It is prohibited to dispose of this appliance as household waste.

Packaging materials

Packaging materials with the recycle symbol are recyclable. Dispose of the packaging into a suitable waste collection container to recycle it.

Before disposal of the appliance

1. Pull out the mains plug from the mains socket.
2. Cut off the power cord and discard with the mains plug.

Warning! Refrigerators contain refrigerant and gases in the insulation. Refrigerant and gases must be disposed of professionally as they may cause eye injuries or ignition. Ensure that tubing of the refrigerant circuit is not damage prior to proper disposal.

	Correct Disposal of this product
	This symbol on the product or in its packing indicates that this product may not be treated as household waste. Instead, it should be taken to the appropriate waste collection point for the recycling of electrical and electronic equipment. By ensuring this product is disposed of correctly, you will help prevent potential negative consequences for the environment and human health, which could otherwise be caused by the inappropriate waste handling of this product. For more detailed information about the recycling of this product, please contact your local council your household waste disposal service, or the shop where you purchased the product.

Customer support line (for UK mainland and Northern Ireland only) : 0191 387 0804, Southern Ireland customers please contact your Retailer.

Hisense

life reimagined

Hisense UK Ltd
Ground floor Munroe Court
White Rose Office Park
Millshaw Park Lane
Leeds LS11 0EA

4372133-B