SENSIS

EN **Tumble Dryer / User Manual**

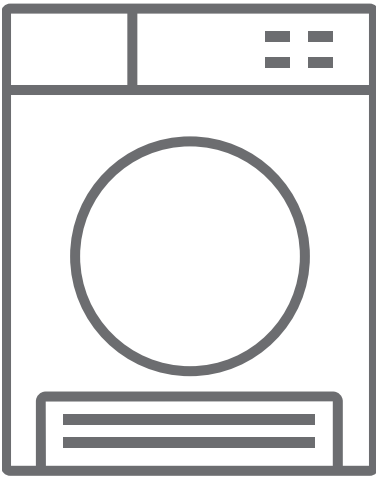

TDCF0110BW

Thank you for choosing this product.

This User Manual contains important safety information and instructions on the operation and maintenance of your appliance. Please take the time to read this User Manual before using your appliance and keep this book for future reference.

Icon	Caption	Description
	WARNING	Risk of serious injury or death
	RISK OF ELECTRIC SHOCK	Dangerous voltage
	FIRE	Risk of fire
	ATTENTION	Risk of injury or material damage
	IMPORTANT/NOTE	Information on correct operation of the system
		Read the instructions.
		Hot surface

CONTENTS

1. SAFETY INSTRUCTIONS 3
1.1. Electrical Safety 3
1.2. Children's Safety 4
1.3. Product Safety 5
1.4. Correct Use 6
1.5. Installing On Top Of a Washing Machine 7
2. INSTALLATION 9
2.1. Connection to Water Outlet (with optional drain hose) 9
2.1.1. Connecting the Water Discharge Hose 9
2.2. Adjusting the Feet 9
2.3. Electrical Connection 10
2.4. Under Counter Installation 10
3. OVERVIEW 10
4. PREPARING THE LAUNDRY 11
4.1. Sorting the Laundry to be Dried 11
4.2. Preparing the Laundry to be Dried 12
4.3. Load Capacity 12
5. USING THE TUMBLE DRYER 13
5.1. Control Panel 13
5.1.1. Programme Selection Knob 13
5.1.2. Electronic Indicator and Additional Functions 13
5.2. Programme Selection and Consumption Table 14
5.2.1. Auxiliary Functions 15
5.2.2. Starting the Programme 16
5.2.3. Selection Stand By 17
5.2.4. Programme Progress 17
5.3. Drum Light Information 17
6. CLEANING AND CARE 19
6.1. Cleaning the Lint Filter 19
6.2. Emptying the Water Tank 19
6.3. Cleaning the Condenser 20
6.4. Cleaning the Humidity Sensor 20
6.5. Cleaning the Inner Surface of the Loading Door 21
7. TECHNICAL SPECIFICATIONS 22

8. TROUBLESHOOTING 23
9. AUTOMATIC FAULT WARNINGS AND WHAT TO DO 25
10. ENVIRONMENTAL PROTECTION AND PACKAGING INFORMATION 26
10.1. Packaging Information 26
11. DESCRIBING THE ENERGY LABEL AND SAVING ENERGY 26
11.1. Energy Labelling 26
11.2. Energy Efficiency 27

PRIMARY CONSIDERATIONS

- This appliance can be used by children aged from 8 years and above and persons with reduced physical, sensory or mental capabilities or lack of experience and knowledge if they have been given supervision or instruction concerning use of the appliance in a safe way and understand the hazards involved. Children must not play with the appliance. Cleaning and user maintenance must not be made by children without supervision.
- Children of less than 3 years should be kept away unless continuously supervised.
- This tumble dryer is intended only for household and indoor use. The warranty will be void in case of commercial use.
- Use this product only for laundry with a label that indicates it is suitable for drying.
- The manufacturer will not accept responsibility for damages resulting from incorrect use or transport.
- The service life time of your tumble dryer is 10 years. This is the period during which the spare parts required for the tumble dryer to operate properly will be commercially available.
- Do not allow floor coverings to obstruct the ventilation openings.
- Installation and repair of the machine should only be made by an authorised repair agent. The manufacturer cannot be held responsible for damages resulting from un-authorised repairs.

⚠ **WARNING:** Never spray or pour water onto the dryer to wash it! There is risk of electric shock!

- Leave at least 3 cm of space between the side and rear walls of the product and above if you plan on placing your appliance under a worktop.

- Assembly / disassembly for under-counter installation if neccessary must be done by an authorised service agent.
- Before installation, check the product for visible damage. Never install or operate a damaged product.
- Keep pets away from the dryer.
- Fabric softeners, or similar products, should be used in accordance with the manufacturers instructions.
- Remove all objects from pockets such as lighters and matches.
- The appliance must not be installed behind a lockable door, a sliding door or a door with a hinge on the opposite side to that of the tumble dryer, if it prevents the door from being fully opened.

1. SAFETY INSTRUCTIONS

This section contains safety instructions that will help protect you from risk of personal injury or property damage. Failure to follow these instructions will void any warranty.

1.1. Electrical Safety

- The appliance must not be supplied through an external switching device, such as a timer, or connected to a circuit that is regularly switched on and off by a utility.
- Do not touch the power plug with wet hands. Always pull the plug to unplug the product, otherwise, there will be risk of an electric shock.
- Connect the dryer to a grounded socket with fuse protection. Have the earth connection installed by a qualified electrician. Our company cannot be held responsible for damages/losses resulting from using the dryer without an earth connection as required by local regulations.
- The voltage and the allowable fuse protection are indicated on the type plate.**(For the type plate, please see Overview)**
- Voltage and frequency values indicated on the type plate must be equal to the mains voltage and frequency value in your house.
- Unplug the dryer when it is not used for an extended period, and before installation, maintenance, cleaning and repair, otherwise, the dryer may get damaged.
- The plug socket must be freely accessible at all times after installation.

⚠ A damaged power cord/plug can cause fire or give you an electric shock. When damaged it must be replaced, this should only be done by qualified personnel.

⚠ To avoid the risk or fire or electric shock, do not use extension cords, multi sockets or adapters to connect the dryer to mains power.

1.2. Children's Safety

- This appliance is not intended for use by persons (including children) with reduced physical, sensory or mental capabilities, or lack of experience and knowledge, unless they have been given supervision or instruction concerning use of the appliance by a person responsible for their safety.
- This appliance can be used by children aged from 8 years and above and persons with reduced physical, sensory or mental capabilities or lack of experience and knowledge if they have been given supervision or instruction concerning use of the appliance in a safe way and understand the hazards involved. Children must not play with the appliance. Cleaning and user maintenance must not be made by children without supervision.
- Do not leave children unattended near the machine.
- Children might lock themselves in the machine resulting in risk of death.
- Do not allow children to touch the glass door during operation. The surface becomes extremely hot and may cause skin damage.
- Keep packaging material away from children.
- Poisoning and irritation may occur if detergent and cleaning materials are consumed or come into contact with the skin and eyes.

- Keep cleaning materials out of the reach of children Electrical products are dangerous for children.
- Keep children away from the product while it is running.
- To prevent children from interrupting the dryer cycle, you can use the child lock to avoid any changes in the running programme.
- Do not allow children to sit/climb on or climb inside the product.

1.3. Product Safety

⚠Due to risk of fire, the following laundry items and products should NEVER be dried in the dryer:

- Do not dry unwashed items in the tumble dryer.
- Items that have been soiled with substances such as cooking oil, acetone, alcohol, petrol, kerosene, spot removers, turpentine, waxes and wax removers should be washed in hot water with an extra amount of detergent before being dried in the tumble dryer.
- Cleaning cloths and mats that have residues of flammable cleaning agents or acetone, gas, patrol, stain remover, turpentine, candle, wax, wax remover or chemicals.
- Laundry that has residues of hair sprays, nail polish remover and similar substances.
- Laundry on which industrial chemicals have been used for cleaning (such as chemical cleaning).
- Laundry that has any kind of foam, sponge, rubber or rubber-like parts or accessories. These include latex foam sponge, shower caps, waterproof fabrics, fitted clothes and foam pillows.
- Items with filling and damaged items (pillows or jackets). Foam protruding from these items might catch fire during the drying process.

- Operating the dryer in environments that contain flour or coal dust may cause explosion.

⚠ **ATTENTION:** Underwear that contains metal reinforcements should not be put in the dryer. The dryer may be damaged if metal reinforcements come loose and break off during drying.

1.4. Correct Use

⚠ **ATTENTION:** Never stop a tumble dryer before the end of the drying cycle unless all items are quickly removed and spread out so that the heat is dissipated.

⚠ **ATTENTION: Make sure that pets do not enter the dryer. Check the inside of the dryer before using it.**

⚠ **ATTENTION:** Superheating of clothes inside of the dryer can occur if you cancel the programme or in the event of a power failure whilst the dryer is running. This concentration of heat can cause self-combustion so always activate the Refresh programme to cool down or quickly remove all laundry from the dryer in order to hang them up and dissipate the heat.

- Use the dryer only for household drying and to dry fabrics with a label that indicates they are suitable for drying. All other uses are out of the scope of intended use and are prohibited.
- The warranty will be void in case of any commercial use.
- This appliance is designed to be used inside domestic residences only, and should be placed on a straight and stable surface.
- Do not lean against or sit on the door of the dryer. The dryer may tip over.
- To maintain a temperature that will not harm the laundry (e.g. to prevent the laundry from catching

fire), a cooling process starts after the heating process. After this, the programme ends. At the end of the programme, always remove the laundry promptly.

⚠ **ATTENTION:** Never use the dryer without a lint filter or with a damaged lint filter.

- Lint filters must be cleaned **after each use** as indicated in **Cleaning the Lint Filter**.
- Lint filters must be dried after wet cleaning. Wet filters might cause malfunction during the drying process.
- Lint accumulation must not to be allowed around the tumble dryer (not applicable for appliances intended to be vented to the exterior of the building)

IMPORTANT: The clearance between the dryer and the floor should not be reduced with objects such as carpets, wood or panel, otherwise, sufficient air intake cannot be ensured for the machine.

- The maximum load capacity is 7 kilograms (dry laundry).
- Do not install the dryer in rooms where there is risk of freezing. Freezing temperatures negatively affect the dryers performance.Condensation that freezes in the pump and hose may cause damage.

1.5. Installing On Top Of a Washing Machine

⚠ **ATTENTION:** A washing machine cannot be placed on the dryer. Pay attention to the warnings below when installing the dryer on a washing machine.

⚠ **ATTENTION:** The dryer can only be placed on washing machines that have a same capacity and above.

- To use the dryer on the washing machine, a fixing part must be used between the two products. The fixing part must be attached by an Authorised Service Provider.
- When the dryer is placed on the washing machine, the total weight of these products may reach almost 150 kilograms (when loaded). Place the products on a solid floor that has a load bearing capacity!

Appropriate Installation Table for Washing Machine and Tumble Dryer					
Tumble Dryer (Depth)	Washing Machine				
	37-41 cm	42-45 cm	46-49 cm	50-56 cm	57-63 cm
52,5 cm	X	✓	✓	✓	✓
56 cm	X	X	✓	✓	✓
61 cm	X	X	X	✓	✓
64 cm	X	X	X	X	✓

(For the depth information, please see 7. Technical Specifications)

In order to put the dryer machine onto the washing machine, a special stacking kit is required as an optional extra. Please contact customer service to acquire. The assembly instruction will be served together with the stacking kit.

CE Declaration of conformity

We declare that our products meet the applicable European Directives, Decisions and Regulations and the requirements listed in the standards referenced.

Disposing the Old Product

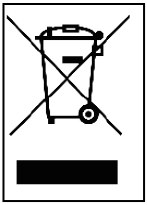

This product complies with EU WEEE Directive (2012/19/EU). This product bears a classification symbol for waste electrical and electronic equipment (WEEE).

This symbol, which is found on the product or information label, indicates that this product must not be disposed together with other household waste at the end of its service life. To prevent the potential harms of uncontrolled waste disposal on the environment and human health, please keep this product separate from other types of waste, and to prevent sustainable reuse of material resources, make sure that it is recycled responsibly. Contact your dealer or local authorities to get information on how and where you can take the product for environmentally-safe recycling. This product cannot be mixed with other commercial wastes for recycling.

2. INSTALLATION

- Before contacting the local Authorised Service Provider for the installation of the dryer, check the information in the user manual to make sure that the electrical installation and water outlet is suitable. If they are not, call a qualified electrician and a plumber to have the necessary adjustments made.
- It is the customer's responsibility to prepare the dryer's installation place, as well as the electricity and waste water installation. Before installation, check the dryer for damage. If damaged, do not have it installed. Damaged products may endanger your health.
- Install the dryer on a stable and flat surface.
- Run the dryer in a dust-free environment where the air ventilation is good.
- The clearance between the dryer and the floor **should not be** reduced with objects such as carpets, wood or tape.
- **Do not block the ventilation grills** found on the plinth of the tumble dryer.
- The appliance must not be installed behind a lockable door, a sliding door or a door with a hinge on the opposite side of the tumble dryer, in such a way that blocks the full opening of the tumble dryer door.
- Once the dryer has been installed, the connections must remain stable. When installing the dryer, make sure that the rear surface is not leaning on anything (e.g. tap, socket).
- The operating temperature of the dryer is +5°C to +35°C. If operated out of this temperature range, the performance of the dryer will be affected negatively and the product will be damaged.
- Be careful when carrying the product since it is heavy. Always wear safety gloves.
- Always install the product should be placed against a wall.
- The rear surface of the product should be placed against the wall.
- When the product is placed on a stable surface, use a water level to check if it is fully stable. If not, adjust the feet until it becomes steady. Repeat this process every time you relocate the product.
- Do not place the dryer onto the power cable.

2.1. Connection to Water Outlet (with optional drain hose)

In products with a condenser unit, water accumulates in the water tank during the drying process. You must empty the accumulated water **after each drying process**. Instead of periodically emptying the water tank, you can also use the water drain hose provided with the product to directly drain the water outside.

2.1.1. Connecting the Water Discharge Hose

1. Pull and take out the end of the hose at the back of the dryer. Do not use any tools to take out the hose.
2. Fit one end of the water discharge hose, which is provided with the product, to the slot from which you have removed the hose.
3. Fix the other end of the water discharge hose directly to the water outlet or sink.

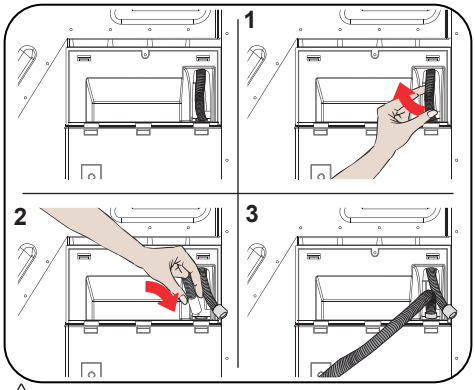

⚠ **ATTENTION:** The hose must be connected in a manner that it cannot be displaced. If the hose comes out during water discharge, there might be flooding in your house.

IMPORTANT: The water discharge house must be installed at a height of 80 cm maximum.

IMPORTANT: The water discharge hose must not be bent between the outlet and the product, folded or stepped over.

2.2. Adjusting the Feet

- For the dryer to work with less noise and vibration, it must be stable and

balanced on its feet. Adjust the feed to ensure that the product is balanced.

- Rotate the feet to the right and to the left until the dryer is even and stable.

IMPORTANT: Never remove the adjustable feet.

2.3. Electrical Connection

ATTENTION: There is risk of fire and electric shock.

- Your dryer is set to 220-240 V and 50 Hz.
- The mains cable of the dryer is equipped with a special plug. This plug must be connected to an earthed socket protected by a fuse of 16 Amperes as indicated on the type plate. The fuse current rating of the power line where the outlet is connected must also be 16 amperes. Consult a qualified electrician if you do not have such an outlet or fuse.
- Our company cannot be held responsible for damages resulting from usage without earthing.

IMPORTANT: Operating your machine at low voltage values will shorten the service life and decrease the performance of your machine.

2.4. Under Counter Installation

- Leave at least 3 cm of space between the side and rear walls of the product and the underside of the worktop when installing your product under a counter.
- Assembly / disassembly under the counter if neccessary must be done by authorized service.

3. OVERVIEW

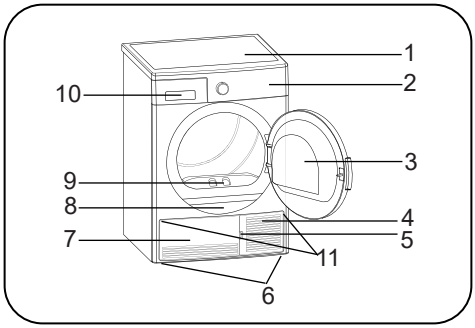

1. Upper tray
2. Control panel
3. Loading door
4. Plinth opening slot
5. Plinth
6. Adjustable feet
7. Plinth cover
8. Type plate
9. Lint filter
10. Drawer Cover
11. Ventilation grills

4. PREPARING THE LAUNDRY

4.1. Sorting the Laundry to be Dried

Follow the instructions on the labels of the laundry to be dried. Only dry items that have a statement/symbol that indicates "they can be dried in a dryer".

- Do not operate the product with load amounts and laundry types other than those given in 4.3. Load Capacity.

Suitable for drying in a dryer	Does not need ironing	Sensitive/Delicate drying	Not suitable for drying in a dryer
No drying	Do not dry-clean	At any temperature	At high temperatures
At medium temperatures	At low temperatures	Heatless	Hang to dry
Spread to dry	Hang wet to dry	Spread in shadow to dry	Suitable for dry cleaning

Do not dry thin, multi-layer or thick-layer fabrics together as they dry at different levels. For this reason, dry clothes together that have the same structure and fabric type. This way, you can get an even drying result. If you think that the laundry is still wet, you can select a time programme for additional drying.

Please dry your big (like duvets) and small sizes of laundries seperately in order to not to have a damp laundries.

IMPORTANT: Delicate fabrics, embroided fabrics, woolen/silk fabrics, clothes made of delicate and expensive fabrics, airtight clothes and tulle curtains are not suitable for drying in the dryer.

4.2. Preparing the Laundry to be Dried

Risk of explosion and fire!

Remove all objects from pockets such as lighters and matches.

ATTENTION: The drum of the dryer and the fabrics may get damaged.

- The clothes may have become entangled during the washing process. Separate them from each other before placing them in the dryer.
- Remove all objects in the pockets of the clothes and apply the following:
- Tie fabric belts, apron laces etc. to each other or use a laundry bag.
- Lock the zips, clasps and fasteners, do up the buttons of covers.
- To get the best drying result, sort the laundry according to the textile type and drying programme.
- Remove clips and similar metal parts from the clothes.
- Woven goods such as t-shirts and knit clothes **generally shrink in the first drying.** Use a protective programme.
- **Do not over-dry synthetics. This will cause creases.**
- When washing the laundry to be dried, adjust the amount of softener according to the data from the manufacturer of the washing machine.

4.3. Load Capacity

Follow the instructions in the "Programme selection and consumption table". **(See: 5.2 Programme selection and consumption table).** Do not load the product with more laundry than the capacity values specified in the table.

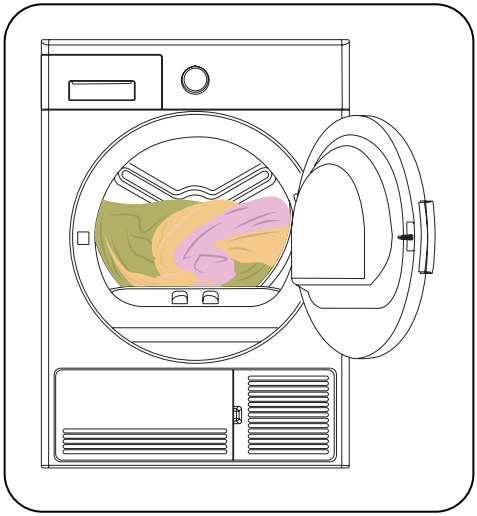

IMPORTANT: It is not recommended to load the dryer with more laundry than the amount shown in the figure. When overloaded, the drying performance of the dryer will decrease and the dryer and laundry might be damaged.

Laundry	Dry load weight (gr)
Bedsheet (double)	725
Pillowcase	240
Bath Towel	700
Hand Towel	225
Shirt	190
Cotton Shirt	200
Jean	650
Fabric - Gabardine Trousers	400
T-shirt	120

5. USING THE TUMBLE DRYER

5.1. Control Panel

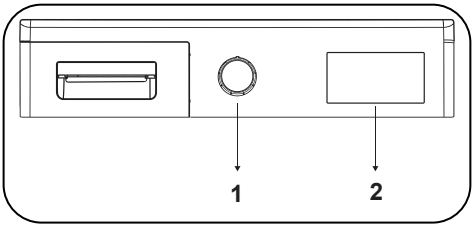

1. Programme Selection Knob

2. Electronic indicator and additional functions

5.1.1. Programme Selection Knob

Use the programme selection knob to select the desired drying programme

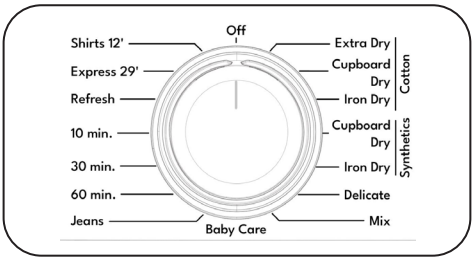

5.1.2. Electronic Indicator and Additional Functions

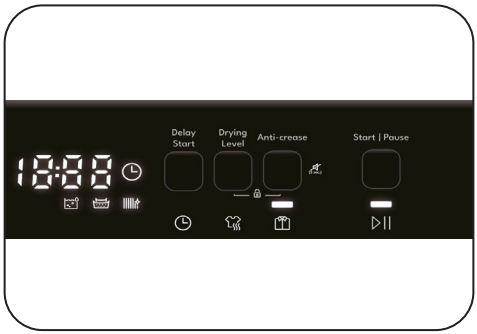

Display symbols:

Water tank warning indicator	
Lint filter cleaning warning indicator	
Condenser cleaning warning indicator	

5.2. Programme Selection and Consumption Table

Press the Start/Pause button to start the programme. The Start/Pause LED that indicates that the programme has started and the Drying LED will come on.

Programme	Load (kg)	Washing machine spin speed	Approximate amount of remaining humidity	Duration (minutes)
Cotton Extra Dry	10	1000	60%	169
Cotton Cupboard Dry	10	1000	60%	164
Cotton Iron Dry	10	1000	60%	151
Synthetics Cupboard Dry	5	800	40%	62
Synthetics Iron Dry	5	800	40%	54
Delicate	2	600	50%	46
Mix	4	1000	60%	79
Baby Care	3	1000	60%	64
Jeans	4	800	60%	92
60 min	-	-	-	60
30 min	-	-	-	30
10 min	-	-	-	10
Refresh	-	-	-	10
Express 29'	1,5	1200	50%	29
Shirts 12'	0,5	1200	50%	12

Energy consumption values				
Programme	Load (kg)	Washing machine spin speed	Approximate amount of remaining humidity	Energy consumption values (kWh)
Cotton Cupboard Dry	8	1000	60%	4,68
Cotton Iron Dry	8	1000	60%	4,1
Synthetics Cupboard Dry	4	800	40%	1,67
Power consumption in the "off mode" P_O (W)				0.5
Power consumption in the "on mode" P_L (W)				1.0

The Cotton Cupboard Dry programme is the standard drying programme that can be run with a full or half load and for which the information is given on the label and product receipt. This programme is the most energy efficient programme to dry normal wet cotton clothes.

*Energy labelling standard programme (EN 61121:2013)

All values in the table were determined in accordance with the EN 61121:2013 standard. Consumption values may vary from the values in the table depending on the fabric type, spin speed, environment conditions and voltage values.

5.2.1. Auxiliary Functions

The table that summarises the options that can be selected in programmes is given below.

Option	Description
Drying Level	The humidity level obtained after drying can be increased by 3 levels. This way, level of required dryness can be selected. The levels that can be selected other than the standard setting: 1, 2, 3. After selection, the LED of the relevant drying level will turn on.
Anti-crease	If you select the “Anti-Crease” option and do not open the door of the dryer at the end of the programme, the 1-hour anti-crease phase will extend to 2 hours. After selecting the Anti Crease option, you will hear an audible warning. You can press the same button again to cancel the option. If you open the door or press the Start/ Pause key while the anti-crease step is in progress, the said step will be cancelled.
Delayed Start	You can delay the start time of the programme by selecting the 1-hour to 23-hour option. You can activate the desired delay time by pressing the Start/Pause button. When the time is up, the selected programme will start automatically. During the delay time, options compatible with the programme can be activated/deactivated. Long pressing on Delayed Start button changes delay time continuously.
Buzzer Cancel	The dryer gives an audible warning when program selection knob is turned, buttons are pressed and at the end of programme. To cancel the warnings, press and hold the "Anti-Crease Option" button for 3 seconds. When you press the button, you will hear an audible warning that the option has been cancelled.
Child Lock	There is a child lock option to avoid changes in the programme flow when keys are pressed during the programme. To activate child lock feature user should press “Drying Level” and “Anticrease” buttons simultaneously for 3 sec. When the child lock activated, all keys will be deactivated. Child lock is not automatically deactivated at the end of the program. To deactivated child lock at end of the programme, set the programme selection knob to “Off” position. Then programme selection knob to first position. Child lock is still active. To deactivated child lock , user should press “Drying Level” and “Anticrease” buttons simultaneously for 3 sec. When activating/deactivating the child lock, “CL” will visualize on display for 2 sec and then becomes off; and an audible warning will be heard. Warning: When the product is running or the child lock is active, if you turn the programme selection knob, you will hear an audible warning and “CL” will visualize on display for 2 sec and then becomes off. If you turn the programme selection knob, you will hear an audible warning. Even if you set the programme knob to another programme, the previous programme will continue running. To select a new programme, you need to deactivate the child lock and then set the programme selection knob.

5.2.2. Starting the Programme

The Start/Pause LED will flash during programme selection.Press the Start/Pause button to start the programme. The Start/Pause LED that indicates that the programme has started and the drying LED will come on.

Programme	Description
Cotton Extra Dry	This programme dries thick and multi-layer fabrics, such as cotton towels, bedsheets, pillowcases, bathrobes, at a high temperature to allow you to place them in a closet.
Cotton Cupboard Dry	This programme dries cotton pyjamas, underwear, tablecloths etc. to allow you to place them in a closet.
Cotton Iron Dry	This programme dries cotton laundry to prepare it for ironing. Laundry removed from the machine will be damp.
Synthetics Cupboard Dry	This programme dries synthetics, such as shirts, t-shirts, blouses, at a lower temperature compared to the cottons programme to allow you to place them in a closet.
Synthetics Iron Dry	This programme dries synthetics, such as shirts, t-shirts, blouses, at a lower temperature compared to the cottons programme to prepare them for ironing. Laundry removed from the machine will be damp.
Delicate	This programme dries thin clothes like shirts, blouses and silk garments at a low temperature to make them ready to wear.
Mix	This programme dries cotton-synthetic mixed garments that do not discolour to make them ready to wear.
Baby Care	This programme dries delicate infant clothes at a low temperature to make them ready to wear.
Jeans	This programme is used to dry jeans.
Time Programmes	To reach the required drying level at a low temperature, you can use the timed programmes of 10 min., 30 min., and 60 min. Regardless of the drying level, the programme stops at the desired time.
Refresh	This programme provides ventilation for 10 minutes without applying heat to help freshen up your garments.
Express 29’	1,5 kg of cotton shirts spun at a high speed in the washing machine are dried in 29 minutes.
Shirts 12'	2 to 3 shirts are ready for to be ironed in 12 minutes.

IMPORTANT: Do not open the loading door while the programme is running. If you have to open the door, do not keep it open for a long time.

5.2.3. Selection Stand By

After 15 minutes without user action in selection mode, machine goes to energy-saving mode due to decrease energy consumption. In this model, “- - - “ must blink with 0,5 sec ON, 3 sec OFF during energy-saving mode. At the energy saving mode, “- - - “ led luminosity is reduced. To restart the machine it will be necessary to move selector to OFF and select again the program

5.2.4. Programme Progress

During the Programme

If you open the door when the programme is running, the product will switch to stand by mode. Once the door has been closed, press the Start/Pause key to resume the programme.

Do not open the loading door when the programme is running. If you have to open the door, do not keep it open for a long time.

Programme End

Once the programme is over, the warning LEDs for Start/Pause, water tank level, filter cleaning and condenser cleaning will turn on. Additionally, an audible warning will be given at the end of the programme. You can remove the laundry to make the machine ready for a new load.

IMPORTANT: Clean the lint filter after every programme. Empty the water tank after every programme.

IMPORTANT: If you do not take out the laundry after the programme has ended, the 1-hour Anti Crease phase will automatically be activated. This programme rotates the drum at regular intervals to prevent creases.

5.3. Drum Light Information

- This product includes LED Drum Light.
- The light works automatically when you open the door. And closes itself after a while automatically.
- It is not an adjustable option for user to open or close it.
- Please do not try to replace or modify the LED Light.
- Do not repair or replace the drum light. Please contact the service to arrange a servis intervention.

PROGRAMMES	OPTIONS				
	Delay Start	Buzzer Cancel	Child Lock	Drying Level	Anticrease
Cotton Extra Dry	✓	✓	✓	✓	✓
Cotton Cupboard Dry	✓	✓	✓	✓	✓
Cotton Iron Dry	✓	✓	✓	✓	✓
Synthetics Cupboard Dry	✓	✓	✓	✓	✓
Synthetics Iron Dry	✓	✓	✓	✓	✓
Delicate	✓	✓	✓	X	✓
Mix	✓	✓	✓	✓	✓
Baby Care	✓	✓	✓	✓	✓
Jeans	✓	✓	✓	✓	✓
60 min	✓	✓	✓	X	✓
30 min	✓	✓	✓	X	✓
10 min	✓	✓	✓	X	✓
Refresh	✓	✓	✓	X	✓
Express 29’	✓	✓	✓	X	✓
Shirts 12'	✓	✓	✓	X	✓
X	Not selectable				
✓	Selectable				

⚠ **ATTENTION:** “Delicate” and “Drying Level” options cannot be selected at the same time in any programme.

6. CLEANING AND CARE

IMPORTANT: Do not use industrial chemicals to clean your dryer. Do not use a dryer that has been cleaned with industrial chemicals.

6.1. Cleaning the Lint Filter

IMPORTANT: DO NOT FORGET TO CLEAN THE LINT FILTER AFTER EACH USE.

To clean the lint filter:

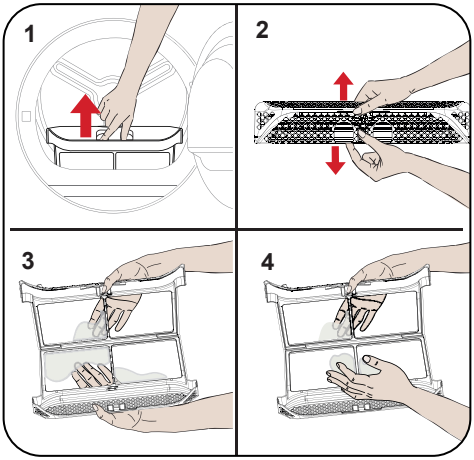

1. Open the loading door.
2. Pull up the lint filter to remove it.
3. Use your hands or a soft cloth to clean the lint.
4. Close and refit the lint filter.

After the dryer has been used for a certain period of time, if you encounter a layer that will cause obstruction on the filter surface, wash the filter with warm water to clean the layer. Dry the filter thoroughly before reinstalling it again.

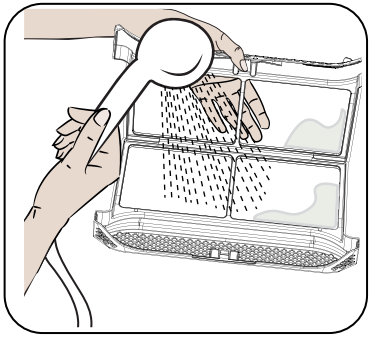

6.2. Emptying the Water Tank

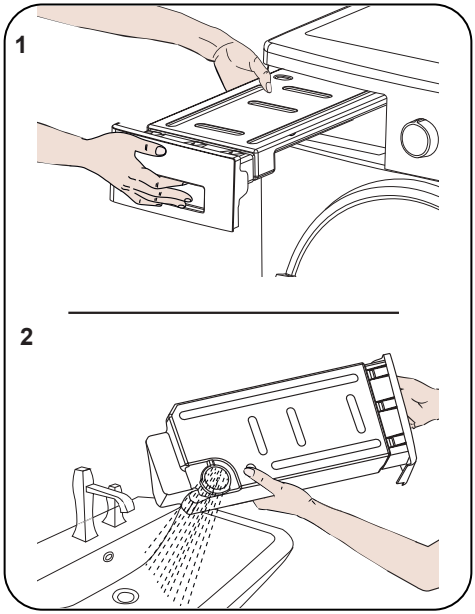

1. Pull the drawer cover and carefully take out the tank.
2. Empty the water in the tank.
3. If there is lint accumulated on the discharge cap in the tank, clean it with water.
4. Refit the water tank.

IMPORTANT: Never remove the water tank when the programme is running. The water condensed in the water tank is not suitable for human consumption.

IMPORTANT: DO NOT FORGET TO EMPTY THE WATER TANK AFTER EACH USE.

6.3. Cleaning the Condenser

IMPORTANT: Clean the condenser when you see the warning “Condenser Cleaning”.

IMPORTANT: EVEN IF THE “CONDENSER CLEANING WARNING LED” IS NOT ON: CLEAN THE CONDENSER AFTER EVERY 30 DRYING PROCESSES OR ONCE A MONTH.

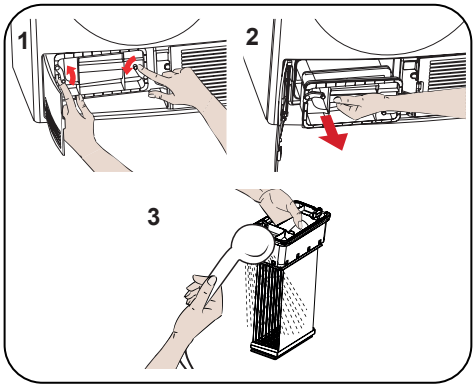

If the drying process is completed, open the loading door and wait for it to cool down.

1. Open the plinth and release the 2 cover locks of the condenser.

2. Hold the condenser by the plastic part and pull it out.

3. Clean it with a showerhead and wait for the water to drain off.

4. Fully insert the condenser into its seat and lock the 2 locks.

5. Close the plinth cover

6.4. Cleaning the Humidity Sensor

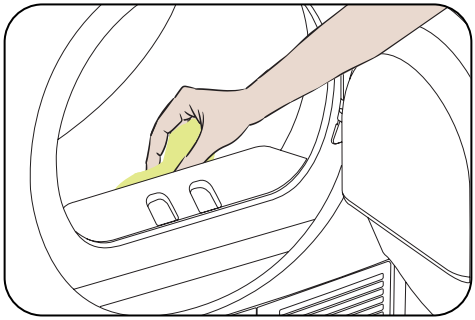

Inside the machine, there are humidity sensors that detect whether the laundry is dry or not.

To clean the sensors:

1. Open the loading door of the machine.

2. If the machine is still hot due to the drying process, wait for it to cool down.

3. Using a soft cloth soaked in vinegar, wipe the metal surfaces of the sensor and dry them.

IMPORTANT: CLEAN THE METAL SURFACES OF THE SENSOR 4 TIMES A YEAR.

IMPORTANT: Do not use metal tools to clean the metal surfaces of the sensor.

⚠ **WARNING:** Due to the risk or fire and explosion, do not use solution agents, cleaning agents or similar products when cleaning the sensors.

6.5. Cleaning the Inner Surface of the Loading Door

⚠ **IMPORTANT:** DO NOT FORGET TO CLEAN THE INNER SURFACE OF THE LOADING DOOR AFTER EACH DRYING PROCESS.

Open the loading door of the dryer and clean all of the inner surfaces and the gasket with a soft, damp cloth.

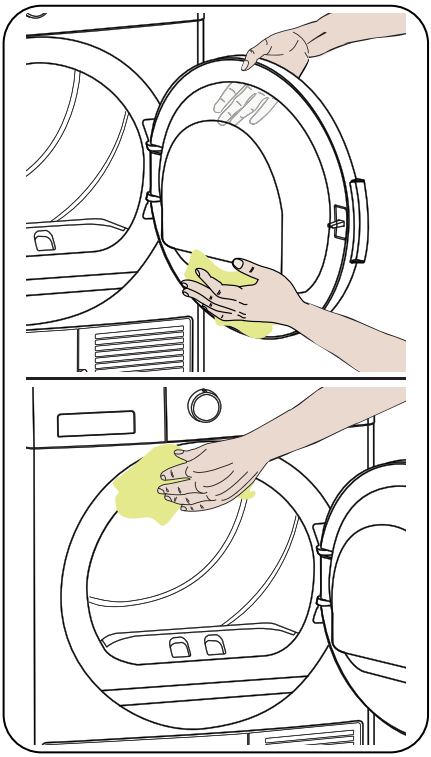

7. TECHNICAL SPECIFICATIONS

Brand	SENSIS
Model name	TDCF0110BW
Height	Min: 845 mm / Max: 855 mm*
Width	596 mm
Depth	639 mm
Capacity (max.)	10 kg**
Net weight (with plastic door)	36 kg
Net weight (with glass door)	37,5 kg
Voltage	220-240 V
Power	2700 W

*Min. height: Height with the adjustable feet not used. Max. height: Height with the adjustable feet extended to the maximum.

**Dry laundry weight before washing.

IMPORTANT: To improve the quality of the dryer, technical specifications are subject to change without prior notice.

IMPORTANT: The values declared have been obtained in a laboratory environment according to the relevant standards. These values may change depending on the environmental conditions and use of the dryer.

8. TROUBLESHOOTING

Your dryer is fitted with systems that continuously perform checks during the drying process to take the necessary measures and warn you in case of any malfunction.

⚠ **WARNING:** If the problem persists even if you have applied the steps in this section, please contact the your dealer or an Authorised Service Provider. Never try to repair a nonfunctional product.

PROBLEM	REASON	SOLUTION
The drying process takes a long time.	The surface of the lint filter might be clogged.	Wash the filter with lukewarm water.
	The condenser might be clogged.	Clean the condenser.
	The ventilation grills in front of the machine might be closed.	Open the doors/windows to prevent the room temperature from rising too much.
	There might be a layer of limescale on the humidity sensor.	Clean the humidity sensor.
	The dryer might be overloaded with laundry.	Do not overload the dryer.
	The laundry might be insufficiently spun.	Select a higher spin speed on your washing machine.
Laundry comes out damp at the end of the drying process.	⚠ The laundry that comes out hot at the end of the drying process generally feels more humid.	
	The programme used might not be suitable for the type of laundry.	Check the care labels on the laundry items, select a suitable programme for the type of laundry and additionally, use the time programmes.
	The surface of the lint filter might be clogged.	Wash the filter with lukewarm water.
	The condenser might be clogged.	Clean the condenser.
	The dryer might be overloaded with laundry.	Do not overload the dryer.
	The laundry might be insufficiently spun.	Select a higher spin speed on your washing machine.
The dryer cannot be opened or the programme cannot be started. The dryer does not get activated when adjusted.	The dryer might not be plugged in.	Make sure that the plug is fitted in the socket.
	The loading door might be open.	Make sure that the loading door is properly closed.
	You might not have set a programme or pressed the Start/ Pause key.	Make sure that the programme has been set and the dryer is not in the Standby (Pause) mode.
	Child lock might be active.	Deactivate the child lock.
The programme has been interrupted for no reason.	The loading door might not be closed properly.	Make sure that the loading door is properly closed.
	There might have been a power failure.	Press the Start/Pause key to start the programme.
	The water tank might be full.	Empty the water tank.

PROBLEM	REASON	SOLUTION
Clothes have shrunk, felted or deteriorated.	The programme used might not be suitable for the type of laundry.	Check the care labels on the laundry items, select a suitable programme for the type of laundry.
Water leaking from the loading door.	There might be lint accumulated on the inner surfaces of the loading door and on the surfaces of the gasket of the loading door.	Clean the inner surfaces of the loading door and the surfaces of the gasket of the loading door.
The loading door opens on its own.	The loading door might not be closed properly.	Push the loading door until you hear the closing sound.
The water tank warning symbol is on/flashing.	The water tank might be full.	Empty the water tank.
	The water discharge hose might be bent.	If the product is connected directly to the water outlet, check the water discharge hose.
The condenser cleaning warning symbol is on.	The condenser might be unclean.	Clean the condenser.
The filter cleaning warning symbol is on.	The lint filter might be unclean.	Clean the filter.
	The filter seat might be clogged by lint.	Clean the filter seat.
	There might be a layer that causes obstruction on the surface of the lint filter.	Wash the filter with lukewarm water.
The program can not be started and the filter warning led is blinking	The filter seat might be clogged by lint.	Clean the filter seat.
	There might be a layer that causes obstruction on the surface of the lint filter.	Wash the filter with lukewarm water.
	The condenser may not be placed.	Replace the condenser.
The program can not be started and both condenser and filter warning leds are blinking	The condenser and filter may not be placed.	Replace the filter and condenser.
	The filter and condenser warning leds are blinking even though the filter and condenser are placed.	Call technical service.

9. AUTOMATIC FAULT WARNINGS AND WHAT TO DO

Your tumble dryer is equipped with a built-in fault detection system, indicated by a combination of flashing operation lights. The most common failure codes are shown below.

ERROR CODE	SOLUTION
E03 /	Empty the water tank, if problem does not solved, contact the nearest authorised service agent.
E04	Contact the nearest authorised service agent.
E05	Contact the nearest authorised service agent.
E06	Contact the nearest authorised service agent.
E08	There may be voltage fluctuation in mains.Wait until voltage is appropriate for working range.

10. ENVIRONMENTAL PROTECTION AND PACKAGING INFORMATION

10.1. Packaging Information

The packaging of this product is made of recyclable materials. Do not dispose of the packaging, waste together with household or other waste. Instead, take it to a packaging collection point defined by your local authority.

11. DESCRIBING THE ENERGY LABEL AND SAVING ENERGY

11.1. Energy Labelling

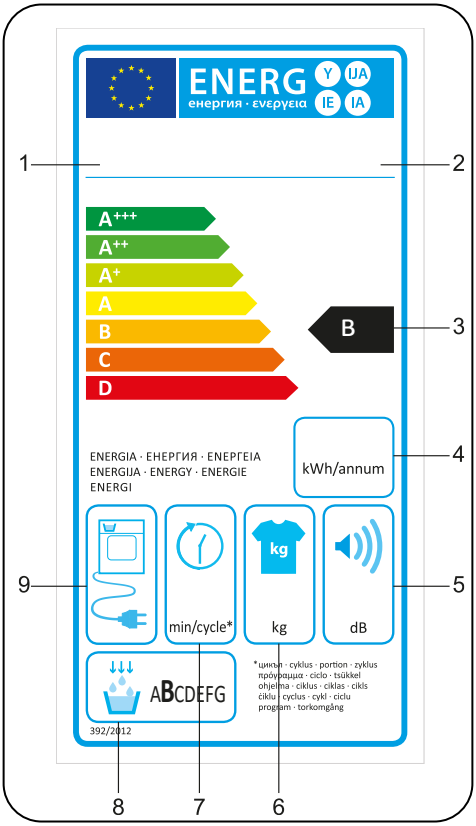

1. Trademark
2. Model
3. Energy Class
4. Annual Power Consumption
5. Noise During Drying
6. Dry Laundry Capacity
7. Cotton Cupboard Dry Cycle Time
8. Condensing Efficiency Class
9. Machine Technology

11.2. Energy Efficiency

- You should operate the dryer to full capacity, but make sure that it is not overloaded.
- When the laundry is being washed, the spin speed should be at the highest level possible. This will shorten the drying time and reduce energy consumption.
- Make sure that the same kinds of laundry are dried together.
- Please follow the recommendations in the user manual for programme selection.
- For air circulation, leave an appropriate clearance on the front and back sides of the Dryer. Do not cover the grills on the front side of the machine.
- Unless necessary, do not open the door of the machine when drying. If you have to open it, do not keep it open for a long time.
- Do not add new (wet) laundry during the drying process.
- Hairs and lint that detach from the laundry and merge in the air are collected by the "Lint Filters". Please make sure that the filters are cleaned before and after each use.
- For models with a condenser, make sure that the condenser is cleaned at least once a month or after each 30 uses.
- During the drying process, the environment where the dryer is installed must be well ventilated.

PRODUCT FICHE	
Complying Commission Delegated Regulation (EU) No 392/2012	
Supplier name or trademark	SENSIS
Model name	TDCF0110BW
Rated capacity (kg)	10
Type of Tumble Dryer	Condenser
Energy efficiency class (1)	B
Annual Energy Consumption (kWh) (2)	670
Automatic of Non-automatic	Automatic
Energy Consumption of the standard cotton programme at full load (kWh)	5,67
Energy Consumption of the standard cotton programme at partial load (kWh)	3,01
Power consumption of the off-mode for the standard cotton programme at full load P_O (W)	0,5
Power consumption of the left-on mode for the standard cotton programme at full load P_L (W)	1,0
The duration of the left mode on (min)	n/a
Standard cotton programme (3)	
Programme time of the standard cotton programme at full load , T_{dry} (min.)	164
Programme time of the standard cotton programme at partial load , $T_{dry1/2}$ (min.)	85
Weighted programme time of the standard cotton programme at full and partial load (T_t)	119
Condensation efficiency class (4)	B
Average condensation efficiency of the standard cotton programme at full load C_{dry}	81%
Average condensation efficiency of the standard cotton programme at partial load $C_{dry1/2}$	81%
Weighted condensation efficiency of the standard cotton programme at full load and partial load C_t	81%
Sound power level for the standard cotton programme at full load (5)	65
Built-in	No

(1) Scale from A+++ (most efficient) to D (least efficient)

(2)Energyconsumption based on 160 drying cycles of the standard cotton programme at full and partial load,and the consumption of the low-power modes. Actual energy consumption per cycle will depend on how the appliance is used.

(3) “Cotton cupboard dry programme” used at full and partial load is the standard drying programme to which the information in the label and the fiche relates, that this programme is suitable for drying normal wet cotton laundry and that it is the most efficient programme in terms of energyconsumption for cotton

(4) Scale from G (least efficient) to A (most efficient)

(5) Weighted average value - L wA expressed in dB(A) re 1 pW

52594519-260505-00