Washing Machine
User manual

WD9*HG6*****/WD1*HG6*****

SAMSUNG

Web_IB_WD6000H_COMBO-MD_SimpleUX_EN.indd 1 2026/5/13 9:36:18

Contents

Safety information 4

What you need to know about the safety instructions 4
Important safety symbols 4
Important safety precautions 5
Critical installation warnings 8
Installation cautions 9
Critical usage warnings 9
Usage cautions 11
Critical cleaning warnings 13
Instructions about the WEEE 14
Ecodesign 14

Installation 15

What's included 15
Installation requirements 17
Step-by-step installation 19

Before you start 28

Initial setup 28
Laundry guidelines 29
Detergent recommendation 32
Detergent drawer guidelines 33

Operations 36

Control panel 36
Operating a cycle 38
Cycle overview 39
Options 42
Special features 46
SmartThings 47
Open Source Announcement 48

Maintenance 49

Drum clean+ 49
Emergency drain 50
Cleaning 51
Defrosting your washing machine 55
Care against an extended time of disuse 55

Web_IB_WD6000H_COMBO-MD_SimpleUX_EN.indd 2 2026/5/13 9:36:19

Troubleshooting 56

Checkpoints 56
Information codes 60

Specifications 63

Fabric care chart 63
Protecting the environment 65
Spare parts guarantee 65
Standby power consumption 65
Specification sheet 66

Contact information 68

QUESTIONS OR COMMENTS? 68

Web_IB_WD6000H_COMBO-MD_SimpleUX_EN.indd 3 2026/5/13 9:36:19

Safety information

Congratulations on your new Samsung washing machine. This manual contains important information on the installation, use and care of your appliance. Please take some time to read this manual to take full advantage of your washing machine's many benefits and features.

What you need to know about the safety instructions

Please read this manual thoroughly to ensure that you know how to safely and efficiently operate the extensive features and functions of your new appliance. Please store the manual in a safe location close to the appliance for future reference. Use this appliance only for its intended purpose as described in this instruction manual.

Warnings and Important Safety Instructions in this manual do not cover all possible conditions and situations that may occur. It is your responsibility to use common sense, caution and care when installing, maintaining and operating your washing machine.

Because the following operating instructions cover various models, the characteristics of your washing machine may differ slightly from those described in this manual and not all warning signs may be applicable. If you have any questions or concerns, contact your nearest service centre or find help and information online at www.samsung.com.

Important safety symbols

What the icons and signs in this user manual mean:

⚠ WARNING

Hazards or unsafe practices that may result in **severe personal injury, death and/or property damage.**

⚠ CAUTION

Hazards or unsafe practices that may result in **personal injury and/or property damage.**

Read the instructions

After reading this manual, store it in a safe place for future reference.
Read all instructions before using the appliance.

NOTE

Indicates that a risk of personal injury or material damage exists.

These warning signs are here to prevent injury to yourself and others.
Please follow them explicitly.

As with any equipment that uses electricity and moving parts, potential hazards exist. To safely operate this appliance, familiarize yourself with its operation and exercise care when using it.

Web_IB_WD6000H_COMBO-MD_SimpleUX_EN.indd 4 2026/5/13 9:36:19

Important safety precautions

To reduce the risk of fire, electric shock, or injury to persons when using your appliance, follow basic precautions, including the following:

1. This appliance is not to be used by persons (including children) with reduced physical, sensory or mental capabilities, or lack of experience and knowledge, unless they have been given supervision or instruction concerning use of the appliance by a person responsible for their safety.
2. **For use in Europe**: This appliance can be used by children aged from 8 years and above and persons with reduced physical, sensory or mental capabilities or lack of experience and knowledge if they have been given supervision or instruction concerning use of the appliance in a safe way and understand the hazards involved. Children shall not play with the appliance. Cleaning and user maintenance shall not be made by children without supervision.
3. Children should be supervised to ensure that they do not play with the appliance.
4. If the supply cord is damaged, it must be replaced by the manufacturer, its service agent or similarly qualified persons in order to avoid a hazard.
5. **CAUTION:** In order to avoid a hazard due to inadvertent resetting of the thermal cut-out, this appliance must not be supplied through an external switching device, such as a timer, or connected to a circuit that is regularly switched on and off by the utility.

Web_IB_WD6000H_COMBO-MD_SimpleUX_EN.indd 5 2026/5/13 9:36:19

6. The new hose-sets supplied with the appliance are to be used and old hose-sets should not be reused.
7. This appliance is intended to be used in household only and it is not intended to be used such as:
   - staff kitchen areas in shops, offices and other working environments;
   - farm houses;
   - by clients in hotels, motels and other residential type environments;
   - bed and breakfast type environments;
   - areas for communal use in blocks of flats or in launderettes.
8. For appliances with ventilation openings in the base, a carpet must not obstruct the openings.
9. **For use in Europe**: Children of less than 3 years should be kept away unless continuously supervised.
10. The tumble dryer is not to be used if industrial chemicals have been used for cleaning.
11. The lint trap has to be cleaned frequently, if applicable.
12. Lint must not be allowed to accumulate around the tumble dryer. (not applicable for appliances intended to be vented to the exterior of the building)
13. Adequate ventilation has to be provided to avoid the back flow of gases into the room from appliances burning other fuels, including open fires.
14. Do not dry unwashed items in the tumble dryer.

Web_IB_WD6000H_COMBO-MD_SimpleUX_EN.indd 6 2026/5/13 9:36:20

15. Items that have been soiled with substances such as cooking oil, acetone, alcohol, petrol, kerosene, spot removers, turpentine, waxes and wax removers should be washed in hot water with an extra amount of detergent before being dried in the tumble dryer.

16. Items such as foam rubber (latex foam), shower caps, waterproof textiles, rubber backed articles and clothes or pillows fitted with foam rubber pads should not be dried in the tumble dryer.

17. Fabric softeners, or similar products, should be used as specified by the fabric softener instructions.

18. The final part of a tumble dryer cycle occurs without heat (cool down cycle) to ensure that the items are left at a temperature that ensures that the items will not be damaged.

19. Remove all objects from pockets such as lighters and matches.

20. **WARNING**: Never stop a tumble dryer before the end of the drying cycle unless all items are quickly removed and spread out so that the heat is dissipated.

21. **WARNING**: The appliance must not be supplied through an external switching device, such as a timer, or connected to a circuit that is regularly switched on and off by a utility.

22. Exhaust air must not be discharged into a flue which is used for exhausting fumes from appliances burning gas or other fuels.

23. The appliance must not be installed behind a lockable door, a sliding door or a door with a hinge on the opposite side to that of the tumble dryer, in such a way that a full opening of the tumble dryer door is restricted.

Web_IB_WD6000H_COMBO-MD_SimpleUX_EN.indd 7 2026/5/13 9:36:20

Safety information

Critical installation warnings

⚠ **WARNING**

The installation of this appliance must be performed by a qualified technician or service company.

- Failure to do so may result in electric shock, fire, an explosion, problems with the appliance, or injury.

The appliance is heavy, therefore take care when lifting it.

Plug the power cord firmly into a wall socket that meets local electrical specifications. Use the socket for this appliance only, and do not use an extension cord.

- Sharing a wall socket with other appliances using a power strip or extending the power cord may result in electric shock or fire.
- Ensure that the power voltage, frequency, and current are the same as those of the product specifications. Failure to do so may result in electric shock or fire.

Remove all foreign substances such as dust or water from the power plug terminals and contact points using a dry cloth on a regular basis.

- Unplug the power plug and clean it with a dry cloth.
- Failure to do so may result in electric shock or fire.

Plug the power plug into the wall socket so that the cord is running towards the floor.

- If you plug the power plug into the socket in the opposite direction, the electric wires within the cable may be damaged and this may result in electric shock or fire.

Keep all packaging materials out of the reach of children as these may be dangerous.

- If a child places a bag over its head, it may suffocate.

When the appliance, power plug or power cord is damaged, contact your nearest service centre.

This appliance must be properly grounded.

Do not ground the appliance to a gas pipe, plastic water pipe, or telephone line.

- This may result in electric shock, fire, an explosion, or problems with the appliance.
- Never plug the power cord into a socket that is not grounded correctly and make sure that it is in accordance with local and national regulations.

Do not install this appliance near a heater or any inflammable material.

Do not install this appliance in a humid, oily or dusty location, or in a location exposed to direct sunlight or water (rain drops).

Do not install this appliance in a location exposed to low temperatures.

- Frost may cause the tubes to burst.

Do not install this appliance in a location where gas may leak.

- This may result in electric shock or fire.

Do not use an electric transformer.

- This may result in electric shock or fire.

Web_IB_WD6000H_COMBO-MD_SimpleUX_EN.indd 8 2026/5/13 9:36:20

Do not use a damaged power plug, damaged power cord, or loose wall socket.

- This may result in electric shock or fire.

Do not pull or excessively bend the power cord.

Do not twist or tie the power cord.

Do not hook the power cord over a metal object, place a heavy object on the power cord, insert the power cord between objects, or push the power cord into the space behind the appliance.

- This may result in electric shock or fire.

Do not pull the power cord when unplugging the power plug.

- Unplug the power plug by holding the plug.
- Failure to do so may result in electric shock or fire.

This appliance should be positioned so that the power plug, the water supply taps, and the drain pipes are accessible.

Following the repair by a non-authorized service provider, self-repair or non-professional repair of the product, Samsung is not liable for any damage to the product, any injury or any other product safety issue caused by any attempt to repair the product which does not carefully follow these repair and maintenance instructions. Any damage to the product caused by an attempt to repair the product by any person other than a Samsung certified service provider will not be covered by the warranty.

Installation cautions

⚠ **CAUTION**

This appliance should be positioned in such a way that the power plug is easily accessible.

- Failure to do so may result in electric shock or fire due to electric leakage.

Install your appliance on a solid, level floor that can support its weight.

- Failure to do so may result in abnormal vibrations, movement, noise, or problems with the appliance.

Critical usage warnings

⚠ **WARNING**

If the appliance is flooded, turn off the water & power supplies immediately and contact your nearest service centre.

- Do not touch the power plug with wet hands.
- Failure to do so may result in electric shock.

If the appliance generates a strange noise, a burning smell, or smoke, unplug the power cord immediately and contact your nearest service centre.

- Failure to do so may result in electric shock or fire.

Web_IB_WD6000H_COMBO-MD_SimpleUX_EN.indd 9 2026/5/13 9:36:20

Safety information

In the event of a gas leak (such as propane gas, LP gas, etc.), ventilate immediately without touching the power plug. Do not touch the appliance or power cord.

- Do not use a ventilating fan.
- A spark may result in an explosion or fire.

Remove the washing machine door lever before disposing the appliance.

- If trapped inside the appliance, children may suffocate to death.

Make sure to remove the packaging (sponge, styrofoam) attached to the bottom of the washing machine before using it.

Do not wash items contaminated with gasoline, kerosene, benzene, paint thinner, alcohol or other inflammable or explosive substances.

- This may result in electric shock, fire, or an explosion.

Do not open the washing machine door by force while it is operating (high-temperature washing/drying/spinning).

- Water flowing out of the washing machine may result in burns or cause the floor to be slippery. This may result in injury.
- Opening the door by force may result in damage to the appliance or injury.

Do not touch the power plug with wet hands.

- This may result in electric shock.

Do not turn the appliance off by unplugging the power cord while an operation is in progress.

- Plugging the power cord into the wall socket again may cause a spark and result in electric shock or fire.

Do not let children climb in or onto the appliance.

- This may result in electric shock, burns or injury.

Do not insert your hand or a metal object under the washing machine while it is operating.

- This may result in injury.

Do not unplug the appliance by pulling the power cord. Always grip the plug firmly and pull it straight out of the outlet.

- Damage to the power cord may cause a short-circuit, fire and/or electric shock.

Do not attempt to repair, disassemble, or modify the appliance yourself.

- Do not use a fuse (such as copper, steel wire, etc.) other than a standard fuse.
- When the appliance needs to be repaired or reinstalled, contact your nearest service centre.
- Failure to do so may result in electric shock, fire, problems with the appliance, or injury.

If the water supply hose comes loose from the water tap and floods the appliance, unplug the power cord.

- Failure to do so may result in electric shock or fire.

Unplug the power cord when the appliance is not being used for long periods of time or during a thunder or lightning storm.

- Failure to do so may result in electric shock or fire.

Web_IB_WD6000H_COMBO-MD_SimpleUX_EN.indd 10 2026/5/13 9:36:20

If any foreign substance enters into the appliance, unplug the power cord and contact your nearest Samsung Customer Service.

- This may result in electric shock or fire.

Do not let children (or pets) play in or on your washing machine. The washing machine door does not open easily from the inside and children may be seriously injured if trapped inside.

Usage cautions

⚠ **CAUTION**

When the washing machine is contaminated by a foreign substance such as detergent, dirt, food waste, etc., unplug the power cord and clean the washing machine using a damp, soft cloth.

- Failure to do so may result in discolouration, deformation, damage, or rust.

The front glass may be broken by a strong impact. Take care when using the washing machine.

- If the glass is broken, it may result in injury.

Open the water tap slowly after a long period of non-use, water supply failure, or when reconnecting the water supply hose.

- The air pressure in the water supply hose or the water pipe may damage a part of the appliance or result in a water leak.

If a draining error occurs during an operation, check if there is a draining problem.

- If the washing machine is used when it is flooded because of a draining problem, it may result in electric shock or fire.

Insert the laundry into the washing machine completely so that the laundry does not get caught in the door.

- If laundry gets caught in the door, it may result in damage to the laundry or the washing machine, or result in a water leak.

Turn the water supply off when the washing machine is not being used.

- Ensure that the screws on the water supply hose connector are properly tightened.

Ensure that the rubber seal and front door glass are not contaminated by a foreign substance (e.g. waste, thread, hair, etc.).

- If a foreign substance is caught in the door or the door is not completely closed, it may cause a water leak.

Open the water tap and check if the water supply hose connector is firmly tightened and that there is no water leak before using the appliance.

- If the screws on the water supply hose connector are loose, it may result in a water leak.

The appliance you have purchased is designed for domestic use only.

Using the appliance for business purposes qualifies as an appliance misuse. In this case, the appliance will not be covered by the standard warranty provided by Samsung and no responsibility can be attributed to Samsung for malfunctions or damages resulting from such misuse.

Web_IB_WD6000H_COMBO-MD_SimpleUX_EN.indd 11 2026/5/13 9:36:20

Safety information

Do not stand on the appliance or place objects (such as laundry, lighted candles, lighted cigarettes, dishes, chemicals, metal objects, etc.) on the appliance.

- This may result in electric shock, fire, problems with the appliance, or injury.

Do not spray volatile material such as insecticide onto the surface of the appliance.

- As well as being harmful to humans, this may result in electric shock, fire or problems with the appliance.

Do not place objects that generate electromagnetic fields near the washing machine.

- This may result in injury due to a malfunction.

Water drained during a high-temperature wash or drying cycle is hot. Do not touch the water.

- This may result in burns or injury.

Draining time may vary depending on the water temperature. If the water temperature is too high, the draining process starts after the water cools down.

Do not wash, spin, or dry water-proof seats, mats, or clothing (*) unless your appliance has a special cycle for washing these items.

(*): Woollen bedding, rain covers, fishing vests, ski pants, sleeping bags, diaper covers, sweat suits, and bicycle, motor cycle and car covers, etc.

- Do not wash thick or hard mats even if the washing machine mark is on the care label. This may result in injury or damage to the washing machine, walls, floor, or clothing due to abnormal vibrations.
- Do not wash throw rugs or doormats with rubber backing. The rubber backing may come off and stick to inside the drum, and this may result in malfunction such as a drainage error.

Do not operate the washing machine when the detergent drawer is removed.

- This may result in electric shock or injury due to a water leak.

Do not touch the insides of the drum during or just after drying as it is hot.

- This may result in burns.

The door glass becomes hot during washing and drying. Therefore, do not touch the door glass.

Also, do not allow children to play around the washing machine or touch the door glass.

- This may result in burns.

Do not insert your hand into the detergent drawer.

- This may result in injury as your hand may be caught by the detergent input device.

Remove the liquid detergent guide (applicable models only) when using powdered detergent.

- If not, water may leak through the front of the detergent drawer.

Do not place any objects (such as shoes, food waste, animals) other than laundry into the washing machine.

- This may result in damage to the washing machine, or injury and death in the case of pets due to the abnormal vibrations.

Do not press the buttons using sharp objects such as pins, knifes, fingernails, etc.

- This may result in electric shock or injury.

Web_IB_WD6000H_COMBO-MD_SimpleUX_EN.indd 12 2026/5/13 9:36:20

Do not wash laundry contaminated by oils, creams or lotions usually found in skincare shops or massage clinics.

- This may cause the rubber seal to become deformed and result in a water leak.

Do not leave metal objects such as safety pins, hair pins or bleach in the drum for long periods of time.

- This may cause the drum to rust.
- If rust starts appearing on the surface of the drum, apply a (neutral) cleansing agent to the surface and use a sponge to clean it. Never use a metal brush.

Do not use dry cleaning detergent directly and do not wash, rinse, or spin laundry contaminated by dry cleaning detergent.

- This may result in spontaneous combustion or ignition due to the heat from the oxidation of the oil.

Do not use water from water cooling/heating devices.

- This may result in problems with the washing machine.

Do not use natural hand-washing soap for the washing machine.

- If it hardens and accumulates inside the washing machine, it may result in problems with the appliance, discolouration, rust, or bad odours.

Place socks and brassieres in a washing net and wash them with the other laundry.

Do not wash large laundry items such as bedding in the washing net.

- Failure to do so may result in injury due to abnormal vibrations.

Do not use hardened detergent.

- If it accumulates inside the washing machine, it may result in a water leak.

Make sure that the pockets of all the clothing items to be washed are empty.

- Hard, sharp objects such as coins, safety pins, nails, screws, or stones can cause extensive damage to the appliance.

Do not wash clothing with large buckles, buttons or other heavy metal objects.

Sort the laundry by colour on the basis of its colorfastness and select the recommended cycle, water temperature and additional functions.

- This may result in discolouration or fabric damage.

Take care that children's fingers are not caught in the door when you close it.

- Failure to do so may result in injury.

To prevent odours and mould, leave the door open after a wash cycle to allow the drum to dry.

To prevent limescale build up, leave the detergent drawer open after a wash cycle and dry inside it.

Critical cleaning warnings

⚠ **WARNING**

Do not clean the appliance by spraying water directly onto it.

Web_IB_WD6000H_COMBO-MD_SimpleUX_EN.indd 13 2026/5/13 9:36:20

Safety information

Do not use a strong acidic cleaning agent.

Do not use benzene, thinner or alcohol to clean the appliance.

- This may result in discolouration, deformation, damage, electric shock or fire.

Before cleaning or performing maintenance, unplug the appliance from the wall socket.

- Failure to do so may result in electric shock or fire.

Instructions about the WEEE

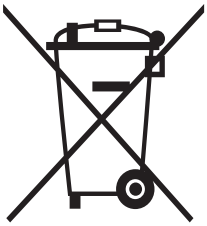

Correct Disposal of This Product (Waste Electrical & Electronic Equipment)

(Applicable in countries with separate collection systems)

This marking on the product, accessories or literature indicates that the product and its electronic accessories (e.g. charger, headset, USB cable) should not be disposed of with other household waste at the end of their working life. To prevent possible harm to the environment or human health from uncontrolled waste disposal, please separate these items from other types of waste and recycle them responsibly to promote the sustainable reuse of material resources.

Household users should contact either the retailer where they purchased this product, or their local government office, for details of where and how they can take these items for environmentally safe recycling.

Business users should contact their supplier and check the terms and conditions of the purchase contract. This product and its electronic accessories should not be mixed with other commercial wastes for disposal.

For information on Samsung's environmental commitments and product regulatory obligations, e.g. REACH, WEEE or Batteries, visit our sustainability page available via www.samsung.com

Product disposal in France

Séparez les éléments avant de trier

Ecodesign

For detailed instructions on installation and cleaning of the washing machine and ecodesign information (according to (EU)2019/2023), visit the Samsung website (http://www.samsung.com), go to Support > Support home, and then enter the model name.

Web_IB_WD6000H_COMBO-MD_SimpleUX_EN.indd 14 2026/5/13 9:36:20

Installation

Follow these instructions carefully to ensure proper installation of the washing machine and to prevent accidents when doing laundry.

What’s included

Make sure all the parts are included in the product package. If you have a problem with the washing machine or the parts, contact a local Samsung customer centre or the retailer.

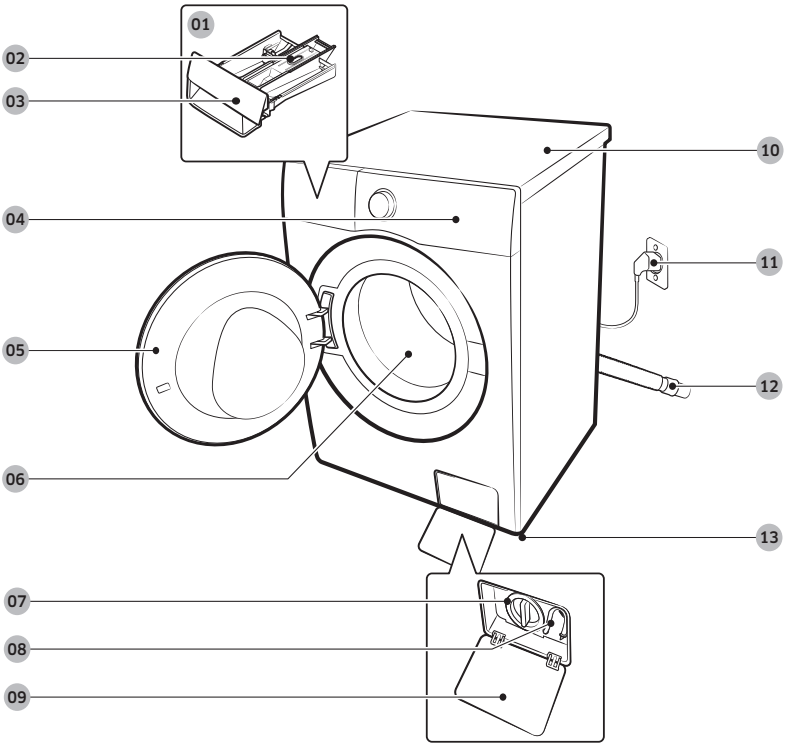

01 Manual dispenser
02 Release lever
03 Detergent drawer
04 Control panel
05 Door
06 Drum
07 Debris filter
08 Emergency drain tube
09 Filter cover
10 Worktop
11 Power plug
12 Drain hose
13 Levelling feet

* The design of the drawer and/or the lever differs with the model.

Web_IB_WD6000H_COMBO-MD_SimpleUX_EN.indd 15 2026/5/13 9:36:21

Installation

Spanner

Bolt caps

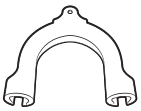

Hose guide

Cold water hose

Hot water hose

Cap Fixer
(applicable models only)

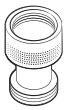

Check valve

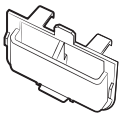

Liquid detergent guide

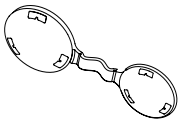

Cap Fixer

NOTE

- Spanner: For removing the shipping bolts and levelling the washing machine.
- Bolt caps: For covering the holes after removing the shipping bolts. The provided number of bolt caps (3 to 6) depends on the model.
- Hose guide: For hanging the drain hose in the drainpipe or wash-basin.
- Cold/Hot water hose: For supplying water to the washing machine. (Hot water hoses is for applicable models only.)
- Check valve: Only supplied to some models.
- Liquid detergent guide: Insert it in the detergent compartment to use liquid detergent. (applicable models only)

Web_IB_WD6000H_COMBO-MD_SimpleUX_EN.indd 16 2026/5/13 9:36:22

Installation requirements

Electrical supply and grounding

- Use an individual branch circuit specific to the washing machine.

To ensure proper grounding, the washing machine comes with a power cord featuring a three-prong grounding plug for use in a properly installed and grounded outlet.

Check with a qualified electrician or service person if you are not sure about the grounding.

Do not modify the provided plug. If it does not fit the outlet, call a qualified electrician to install a suitable outlet.

⚠ **WARNING**

- Do NOT use an extension cord.
- Use only the power cord that comes with the washing machine.
- Do NOT connect the ground wire to plastic plumbing, gas lines, or hot water pipes.
- Improperly connected grounding conductors may cause electric shock.
- Do not remove or modify the grounding pin of power cord to reduce the risk of electric hazard.
- Please use the additional grounding wire provided with this appliance if there is no hole for earth pin in power inlet socket.

Water supply

A proper water pressure for this washing machine is between 50 kPa and 1000 kPa. Water pressure less than 50 kPa may cause the water valve to not close completely, or it may take longer to fill the drum, causing the washing machine to turn off. Water taps must be within 120 cm from the rear of the washing machine so that the provided inlet hoses reach the washing machine.

To reduce the risk of leaks:

- Make sure water taps are easily accessible.
- Turn off the taps when the washing machine is not in use.
- Check for any leaks at the water inlet hose fittings on a regular basis.

⚠ **CAUTION**

Before using the washing machine for the first time, check all connections at the water valve and taps for any leaks.

Drain

Samsung recommends a standpipe 60-90 cm high. The drain hose must be connected through the hose clip to the standpipe, and the standpipe must fully cover the drain hose.

Web_IB_WD6000H_COMBO-MD_SimpleUX_EN.indd 17 2026/5/13 9:36:22

Installation

Flooring

For best performance, the washing machine must be installed on a solid floor. Wood floors may need to be reinforced to minimise vibration and/or unbalanced loads. Carpeting and soft tile surfaces do not resist vibration well and may cause the washing machine to move slightly during the spin cycle.

⚠ **CAUTION**

Do NOT install the washing machine on a platform or a poorly supported structure.

Water temperature

Do not install the washing machine in areas where water may freeze as the washing machine always retains some water in its water valves, pumps, and/or hoses. Frozen water left in the connection parts may cause damage to belts, the pump, and other components of the washing machine.

Alcove installation

Minimum clearance for stable operation:

Sides	25 mm
Top	25 mm
Rear	50 mm
Front	550 mm

If both the washing machine and a dryer are installed in the same location, the front of the alcove must have at least a 550 mm unobstructed air opening. Your washing machine alone does not require a specific air opening.

Web_IB_WD6000H_COMBO-MD_SimpleUX_EN.indd 18 2026/5/13 9:36:22

Step-by-step installation

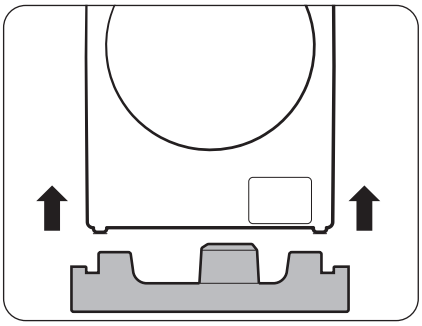

NOTE

While unpacking the washing machine, lift the washing machine from the foam base. Make sure the drum support was removed from the bottom of the washing machine.

STEP 1 Select a location

Location requirements:

- Solid, level surface without carpeting or flooring that may obstruct ventilation
- Away from direct sunlight
- Adequate room for ventilation and wiring
- The ambient temperature is always higher than the freezing point (0 °C)
- Away from a heat source

NOTE

- To prevent excessive vibration while operating the washing machine, consider stability before anything else.
- Install your washing machine on a solid and level floor.
- Do not install your washing machine on soft floors or floor coverings.
- If you install your washing machine on a wood floor, install a water-resistance wooden panel (min 1.18 in. / 30 mm thick) to the floor. Also, we recommend installing your washing machine on the corner of the wood floor.

STEP 2 Remove the shipping bolts

Unpack the product package and remove all shipping bolts.

NOTE

Number of shipping bolts may differ depending on the model.

WARNING

- Packaging materials can be dangerous to children. Dispose all packaging material (plastic bags, polystyrene, etc.) out of children's reach.

Web_IB_WD6000H_COMBO-MD_SimpleUX_EN.indd 19 2026/5/13 9:36:23

Installation

- To avoid injury, cover the holes with bolt caps after removing the shipping bolts. Do not move the washing machine without the shipping bolts in place. Assemble the shipping bolts before moving the washing machine to another location. Keep the shipping bolts in a safe place for future use.

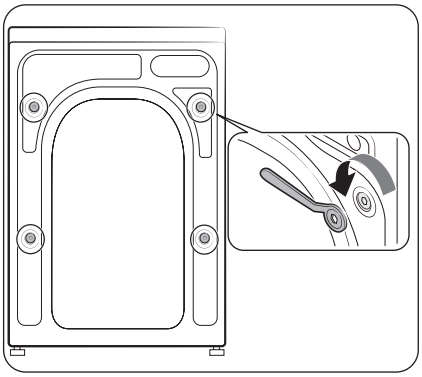

1. Locate the shipping bolts (marked with circle in the figure) on the rear side of the washing machine.
2. Using the supplied spanner, loosen all the shipping bolts by turning them anticlockwise.

NOTE

You must keep the shipping bolts for future use.

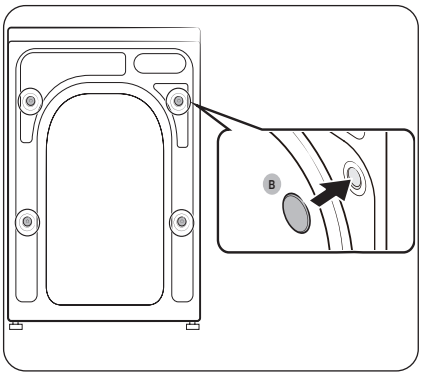

3. Insert the **bolt caps (B)** to the holes (marked with circle in the figure).

Web_IB_WD6000H_COMBO-MD_SimpleUX_EN.indd 20 2026/5/13 9:36:23

STEP 3 Adjust the levelling feet

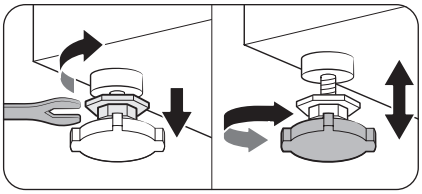

1. Gently slide the washing machine into position. Excessive force may damage the levelling feet.
2. Level the washing machine by manually adjusting the levelling feet.

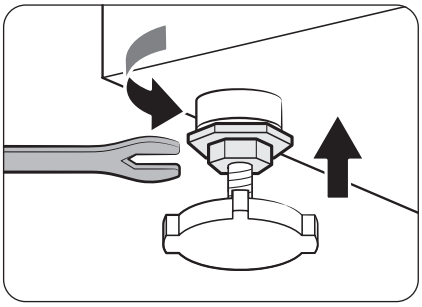

3. When levelling is complete, tighten the nuts using the spanner.

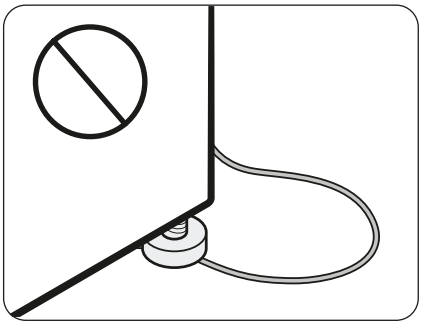

⚠ **CAUTION**

When installing the product make sure the levelling feet is not pressing the power cord.

⚠ **CAUTION**

Make sure all the levelling feet are seating on the floor surface to avoid the washing machine from moving or generating noise due to vibration. Then, check if the washing machine is rocking. If the washing machine is not rocking, tighten the nuts.

Web_IB_WD6000H_COMBO-MD_SimpleUX_EN.indd 21 2026/5/13 9:36:23

Installation

STEP 4 Connect the water hose

The provided water hose may differ depending on the model. Please follow the instruction according to the provided water hose.

Connecting to a threaded water tap

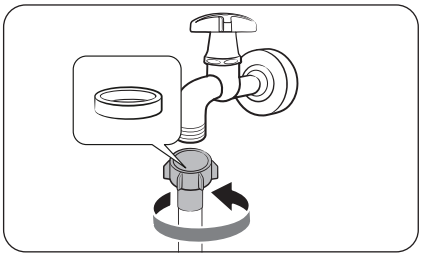

1. Connect the water hose to the water tap, and then turn it to the right to tighten.

⚠ **CAUTION**

Before connecting the water hose, make sure there is a rubber washer in the hose connector. Do not use the hose if the washer is damaged or missing.

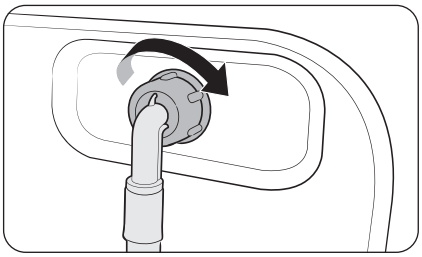

2. Connect the other end of the water hose to the inlet valve on the back of the washing machine, and then turn it to the right to tighten.

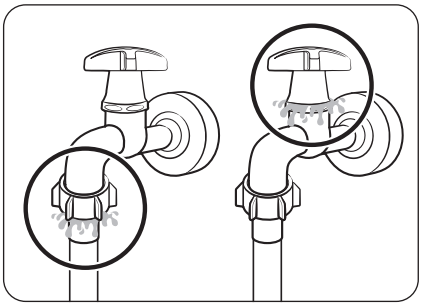

3. Slowly open the water tap and check if there are any leaks around the connection areas. If there are water leaks, repeat step 1 and 2.

⚠ **WARNING**

If there is a water leak, stop operating the washing machine and disconnect it from the electrical supply. Then, contact a local Samsung service centre in case of a leak from the water hose, or contact a plumbing technician in case of a leak from the water tap. Otherwise, this may cause electric shock.

Web_IB_WD6000H_COMBO-MD_SimpleUX_EN.indd 22 2026/5/13 9:36:24

⚠ CAUTION

Do not stretch the water hose by force. If the hose is too short, replace the hose with a longer, high-pressure hose.

Connecting to a non-threaded water tap

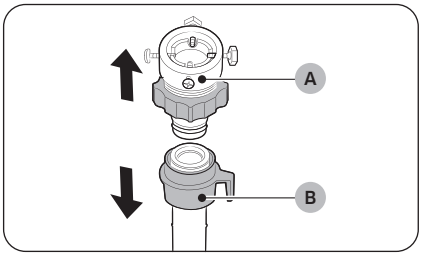

1. Remove the **adaptor (A)** from the water **hose (B)**.

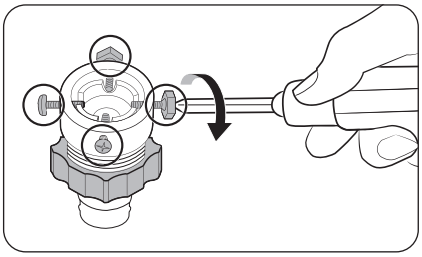

2. Use a Phillips screwdriver to loosen four screws on the adaptor.

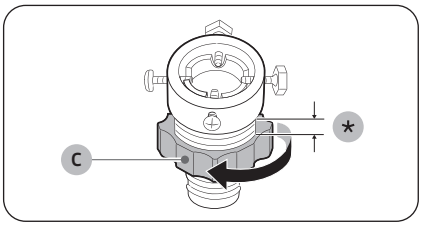

3. Hold the adaptor and turn **part (C)** in the arrow direction to loosen it by 5 mm (*).

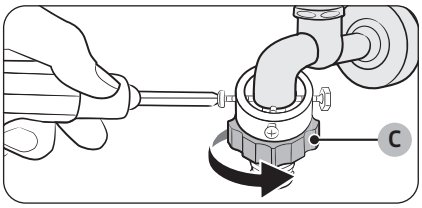

4. Insert the adaptor onto the water tap, and then tighten the screws while lifting the adaptor.
5. Turn **part (C)** in the arrow direction to tighten it.

Web_IB_WD6000H_COMBO-MD_SimpleUX_EN.indd 23 2026/5/13 9:36:25

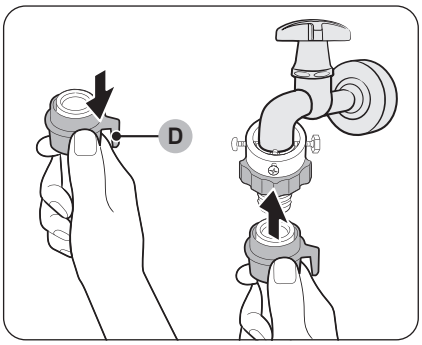

6. While pulling down **part (D)** on the water hose, connect the water hose to the adaptor. Then, release **part (D)**. The hose fits into the adaptor with a clicking sound.

7. To complete connecting the water hose, see 2 and 3 on the "**Connecting to a threaded water tap**" section.

NOTE

- After connecting the water hose to the adaptor, pull the water hose down to check if it is connected properly.
- Use a popular type of water taps. If the tap is square-shaped or too big, remove the spacer ring before inserting the tap into the adaptor.

For models with an additional hot water inlet:

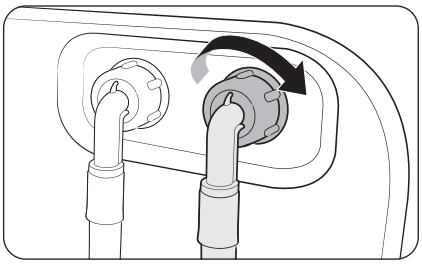

1. Connect the red end of the hot water hose to the hot water inlet on the back of the machine.
2. Connect the other end of the hot water hose to the hot water tap.

Web_IB_WD6000H_COMBO-MD_SimpleUX_EN.indd 24 2026/5/13 9:36:25

Check valve (applicable models only)

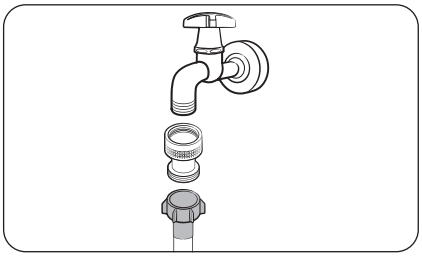

Before connecting the water hose to a water tap, connect the supplied check valve to the water tap and then connect the water hose.

Aqua stop hose (applicable models only)

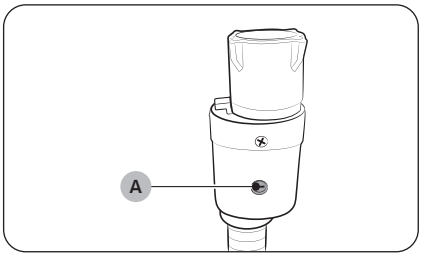

The aqua stop hose alerts users of a risk of water leaks. It senses the water flow and turns red on the centre **indicator (A)** in case of a leak.

NOTE

The end of the aqua stop hose must be fitted to the water tap and not the machine.

Web_IB_WD6000H_COMBO-MD_SimpleUX_EN.indd 25 2026/5/13 9:36:25

Installation

STEP 5 Position the drain hose

The drain hose can be positioned in three ways:

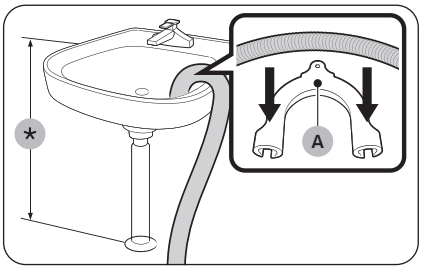

Over the edge of a wash basin

The drain hose must be placed between 60 cm and 90 cm (*) above from the floor. To keep the spout of the drain hose bent, use the supplied **plastic hose guide (A)**. Secure the guide to the wall using a hook to ensure stable drainage.

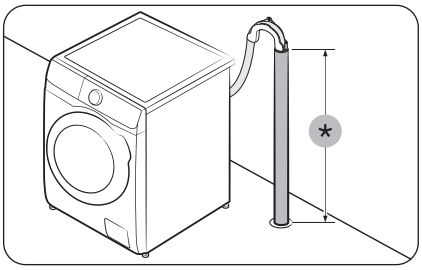

In a drain pipe

The drain pipe should be between 60 cm and 90 cm high (*). It is advisable to use a 65 cm high vertical pipe.

- To ensure the drain hose stays in position, use the plastic hose guide provided (see the figure).
- To prevent the siphoning of water flow during drainage, make sure to insert the drain hose 15 cm in the drain pipe.
- To prevent the drain hose from moving around, secure the hose guide to the wall.

Drain standpipe requirements:

- Minimum diameter of 5 cm
- Minimum carry-away capacity of 60 litres per minute

Web_IB_WD6000H_COMBO-MD_SimpleUX_EN.indd 26 2026/5/13 9:36:26

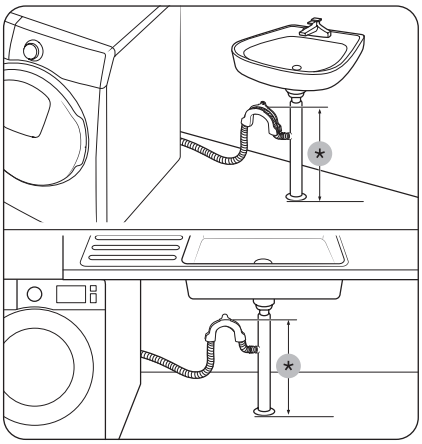

In a sink drain pipe branch

The drain pipe branch must be above the sink siphon so that the end of the hose is at least 60 cm above the ground.

(*) : 60 cm

⚠ **CAUTION**

Remove the lid on the sink drain pipe branch before connecting the drain pipe to it.

⚠ **CAUTION**

Do not put the drain hose in places of stagnant water or ponding. The water may flow back to the washing machine.

STEP 6 Power on

Plug the power cord into a wall socket that is correctly rated, grounded, and protected by a fuse or circuit breaker. Then, tap ⏻ to turn on the washing machine.

Web_IB_WD6000H_COMBO-MD_SimpleUX_EN.indd 27 2026/5/13 9:36:26

Before you start

NOTE

Before doing your laundry for the first time, you must run a complete wash cycle without any items in the drum. If the display does not respond to control inputs. Remove the sticker.

Initial setup

- When you turn on the washing machine for the first time, the screen shows the initial setup process. Follow the on-screen instructions to complete it.
- Initial setup will not repeat after you've completed it.
- The initial setup includes language selection, calibration, and a brief tutorial.
- Tap ○ or turn the **Navigation dial** to skip to the next screen.

Run Calibration

- Initial setup includes the calibration process which comes after the language selection. You must proceed calibration before using the washing machine.
- Empty the drum, and then tap and hold ▷‖ to start calibration.
- When calibration is complete, power turns off and then turns on automatically.
- If you want to proceed calibration again, tap to enter the Options and select **Calibration**.

01 Language selection	**02** Calibration	**03** Welcome screen
◉ English ○ Čeština Turn dial & Tap O	Empty drum before calibrating [Tap O to skip]	Welcome!
04 Tutorial		
Let's explore your new washer! [Tap O to skip]	A washer that knows you! All Done!	

Web_IB_WD6000H_COMBO-MD_SimpleUX_EN.indd 28 2026/5/13 9:36:27

Laundry guidelines

STEP 1 Sort

Sort the laundry according to these criteria:

- Care Label: Sort the laundry into cottons, mixed fibres, synthetics, silks, wools, and rayon.
- colour: Separate whites from colours.
- Size: Mixing different sized items together in the drum improves the washing performance.
- Sensitivity: Wash delicate items separately, such as pure, new woollen items, curtains, and silk items. Check the labels on the items.

NOTE

Make sure to check the care label on the clothing, and sort them accordingly before starting the wash.

STEP 2 Empty pockets

Empty all the pockets of your laundry items

- Metal objects such as coins, pins, and buckles on clothing may damage other laundry items as well as the drum.

Turn clothing with buttons and embroideries inside out

- If trousers or jacket zippers are open while washing, the drum may be damaged. Zippers should be closed and fixed with a string.
- Clothing with long strings may become entangled with other clothes. Make sure to tie the strings before starting the wash.

STEP 3 Use a laundry net

- Brassieres (machine washable) must be placed in a laundry net. Metal parts of the brassieres may break through and tear other laundry items.
- Small, light clothing such as socks, gloves, stockings, and handkerchiefs may become caught around the door. Place them inside a fine laundry net.
- Do not wash the laundry net by itself without other laundry. This may cause abnormal vibrations that could move the washing machine and result in injury.

STEP 4 Prewash (if necessary)

Select the Prewash option for the selected cycle if the laundry is heavily soiled. Do not use the Prewash option when detergent is manually added into the drum.

Web_IB_WD6000H_COMBO-MD_SimpleUX_EN.indd 29 2026/5/13 9:36:27

STEP 5 Determine the load capacity

Do not overload the washing machine. Overloading may cause the washing machine to not wash properly. For the load capacity for the type of clothing, see page **39**.

NOTE

When washing bedding or bedding covers, the wash time may be lengthened or the spin efficiency may be reduced. For bedding or bedding covers, the recommended maximum spin cycle speed is 800 rpm, and the load capacity is 2.0 kg or less.

CAUTION

- Unbalanced laundry may reduce the spinning performance.
- Make sure the laundry is fully inserted in the drum and not caught in the door.
- Do not slam the door. Close the door gently. Otherwise, the door may not be closed properly.

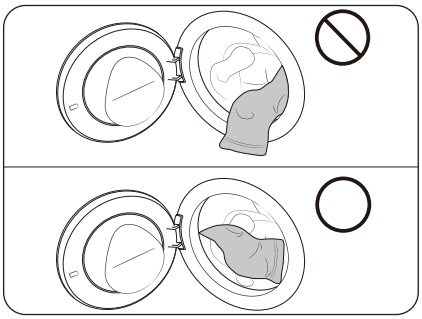

CAUTION

Make sure the laundry is fully inserted into the drum and not caught in the door. Failure to do so may result in damage to the clothing and the diaphragm.

- Such damage is not covered under the product warranty.

STEP 6 Apply a proper detergent type

The type of detergent depends on the type of fabric (cotton, synthetic, delicate items, wool), colour, wash temperature, and degree of soiling. Make sure to use the laundry detergent that is designed for automatic washing machines.

NOTE

- Follow the detergent manufacturer’s recommendations based on the weight of the laundry, the degree of soiling, and the hardness of the water in your local area. If you are not sure about the water hardness, contact a local water authority.
- Do not use detergent that tends to be hardened or solidified. This detergent may remain after the rinse cycle, blocking the drain outlet.

CAUTION

When washing wool using the Wool cycle, use a detergent dedicated to wool items. If used with the Wool cycle, powder detergent may remain on the laundry and discolour the laundry.

Web_IB_WD6000H_COMBO-MD_SimpleUX_EN.indd 30 2026/5/13 9:36:27

Laundry capsules

To get the best results from using laundry capsules, please follow these instructions.

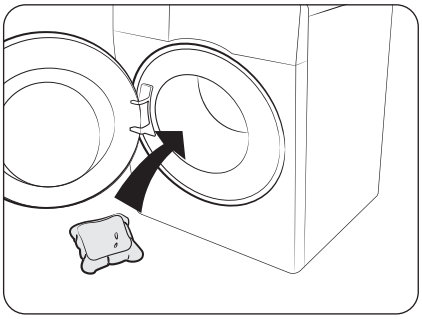

1. Put the capsule in the bottom of the empty drum towards the rear.

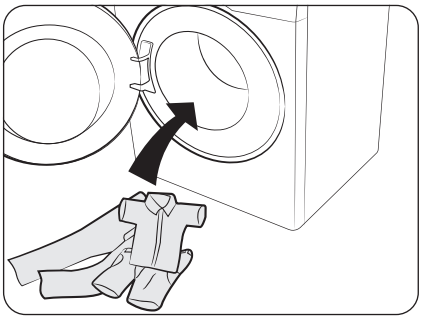

2. Put the laundry in the drum on top of the capsule.

⚠ **CAUTION**

For cycles using cold water or cycles that complete in less than one hour, the capsule may not dissolve completely.

Web_IB_WD6000H_COMBO-MD_SimpleUX_EN.indd 31 2026/5/13 9:36:27

Before you start

Detergent recommendation

The recommendations apply to the temperature ranges given in the cycle chart.

●	Recommended	▲	Liquid detergent only
–	Not recommended	△	Powder detergent only

Cycle	Detergent			Temp. (°C)
	Universal	Delicates and woollens	Specialist	
Eco 40-60	●	-	-	40-60
Cotton	●	-	-	Cold-90
Super Speed	●	-	-	Cold-40
Quick Wash 15'	▲	-	-	Cold-40
Mixed Load	●	-	-	Cold-40
Synthetics	●	-	-	Cold-60
Wool	-	●		Cold-40
Less Microfiber	●	-	-	Cold-40
Hygiene Steam	●	-	-	Cold-90
Colours	●	-	-	Cold-40
Towels	●	-	-	Cold-90
Outdoor	-	-	●	Cold-40
Bedding	●	-	-	Cold-40
Delicates	-	●		Cold-40
Activewear	-	-	●	Cold-40
Baby Care	●	-	-	Cold-90
Cloudy day	●	-	-	Cold-60
Silent Wash	●	-	-	Cold-40
Wash+Dry	●	-	-	40-60

Web_IB_WD6000H_COMBO-MD_SimpleUX_EN.indd 32 2026/5/13 9:36:27

Detergent drawer guidelines

The washing machine provides a three-compartment dispenser: the left compartment for the main wash, the front-right for fabric softeners, and the rear-right for the preliminary wash.

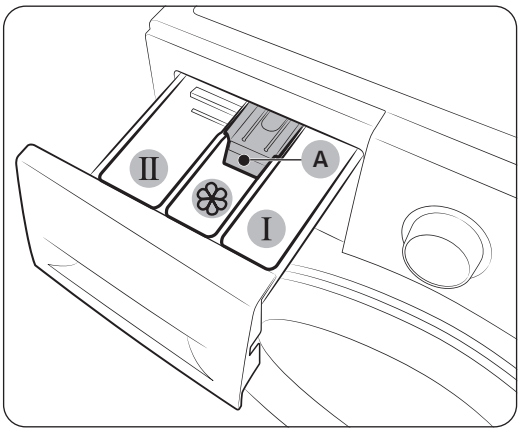

1. I **Prewash compartment**: Apply prewash dete
2. II **Main-wash compartment**: Apply main-wash softener, soaking detergent, bleach, and/or stair
3. ❀ **Softener compartment**: Apply additives such softener. Do not exceed the **max line (A)**.

NOTE

The actual appearance of the softener guide may differ with the model.

CAUTION

- Do not open the detergent drawer while the washing machine is operating.
- Do not use the following types of detergent in the drawer:
  - Tablet or capsule types
  - Ball or net types
- To prevent the compartment from clogging, concentrated or highly-enriched agents (fabric softener or detergent) must be diluted with water before being applied.
- When Delay End is selected, do not apply detergent directly into the drum. Otherwise, this may discolour the laundry. Use the detergent drawer when Delay End is selected.
- Be careful not to spill fabric softener on the worktop or the control panel.

Web_IB_WD6000H_COMBO-MD_SimpleUX_EN.indd 33 2026/5/13 9:36:28

Before you start

To apply washing agents to the manual dispenser

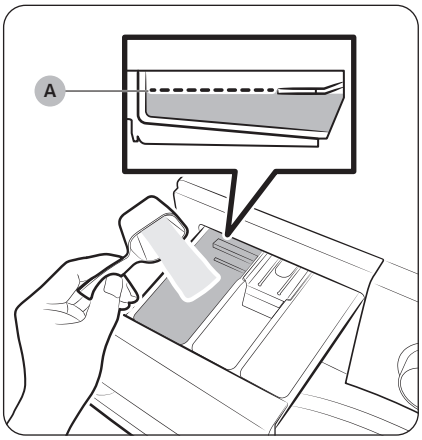

1. Slide open the detergent drawer.
2. Apply laundry detergent to the Ⅱ **main-wash compartment** as instructed or recommended by the manufacturer. To use liquid detergent, see page **<OV>**. Do not exceed the **max line (A)** when adding detergent.

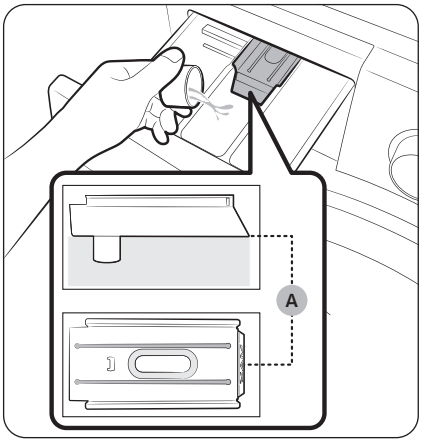

3. Apply fabric softener to the ❀ **softener compartment**. Do not exceed the **max line (A)**. Softener is dispensed into the wash during the final rinse.

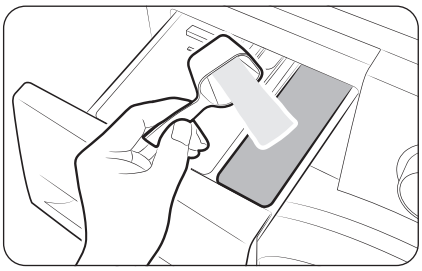

4. If you want to prewash, apply prewash detergent to the Ⅰ **prewash compartment** as instructed or recommended by the manufacturer.
5. Close the detergent drawer.

Web_IB_WD6000H_COMBO-MD_SimpleUX_EN.indd 34 2026/5/13 9:36:29

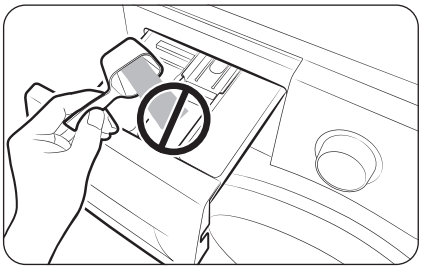

⚠ CAUTION

- Do not apply powder detergent to the liquid detergent guide.
- Concentrated fabric softener must be diluted with water before applied.
- Do not apply main-wash detergent to the **softener compartment**.

To use liquid detergent (applicable models only)

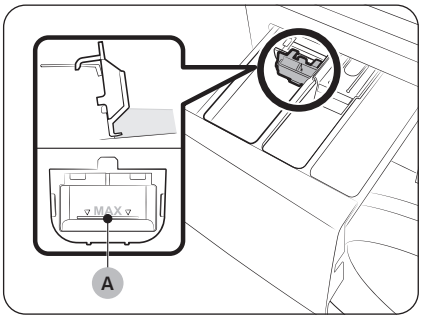

First insert the provided liquid detergent guide in the **II main-wash compartment**. Then, apply liquid detergent to the guide below the marked **max line (A)**.

NOTE

- Insert the liquid detergent guide only after you remove the detergent drawer from the washing machine by pressing **release lever (A)**.
- After a wash, some liquid detergent may remain in the detergent drawer.

⚠ CAUTION

- Do not use the Prewash function when you use liquid detergent.
- Remove the liquid detergent guide when you use powder detergent.

Web_IB_WD6000H_COMBO-MD_SimpleUX_EN.indd 35 2026/5/13 9:36:29

Operations

Control panel

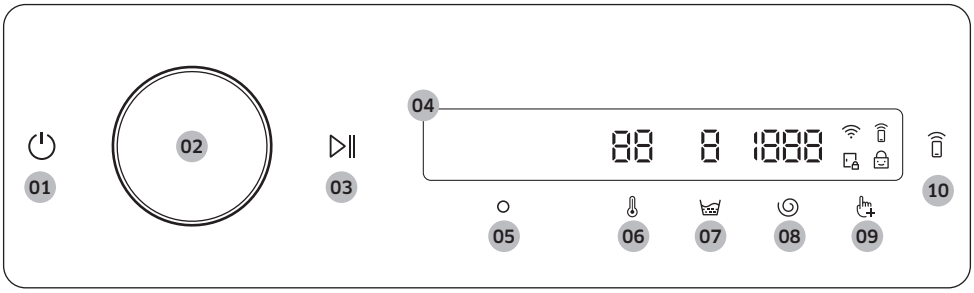

01 Power ⏻	Tap to turn the washing machine on or off. • If you do not manipulate the control panel for 10 minutes after the washing machine is turned on, the washing machine automatically turns off. • The washing machine automatically turns off when the cycle completes. ⚠ **CAUTION** Do not tap ⏻ to turn the washing machine off while the wash cycle is in progress. Tap and hold ▷‖ to pause the cycle first, and then tap ⏻ to turn the washing machine off.
02 Navigation dial	Turn the navigation dial left or right to navigate through cycles and functions. When you turn the navigation dial, LCD displays your selection (such as cycle, and option functions).
03 Start/Pause ▷‖	Tap and hold to start or pause an operation.
04 Display	The display shows current cycle information and estimated time remaining, or an information message when a problem occurs. **NOTE** The actual washing time may differ from the estimated time initially displayed on the control panel upon cycle selection.
05 OK ○	Tap to confirm your selection of function or setting.
06 Temp. 🌡	Tap to change the water temperature for the selected cycle. • The indicator above the button indicates the default or selected setting.
07 Rinse	Tap to change the rinse count for the selected cycle. • The indicator above the button indicates the default or selected setting.
08 Spin	Tap to change the spin speed for the selected cycle. • The indicator above the button indicates the default or selected setting.
09 Options	Tap to enter the Options menu.

Web_IB_WD6000H_COMBO-MD_SimpleUX_EN.indd 36 2026/5/13 9:36:30

10 Smart Control	Tap to activate or deactivate the Smart Control function. Tap and hold to enter pairing mode to connect to the SmartThings app. • When the Smart Control function is activated, you can control your washing machine remotely using the SmartThings app on your smartphone or tablet (Android or iOS).

Icon descriptions

	Wi-Fi	• This icon indicates that the washing machine is connected to Wi-Fi.
	Smart Control	• This icon indicates that Smart Control is on. • For more information on Smart Control, see page **46**.
	Door Lock	• This icon indicates the door is locked and cannot be opened. • The door locks automatically during a cycle and this indicator turns on. • You can open the door when this icon disappears.
	Child Lock	• This icon indicates that Child Lock is on. • For more information on Child Lock, see page **44**.

Web_IB_WD6000H_COMBO-MD_SimpleUX_EN.indd 37 2026/5/13 9:36:31

Operations

Operating a cycle

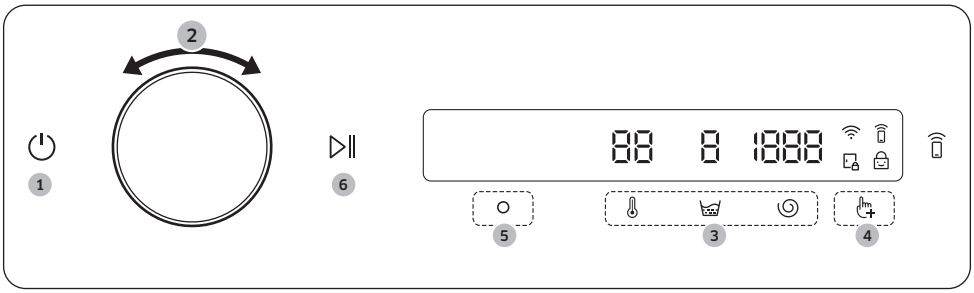

1. Tap ⏻ turn on the washing machine.
2. Turn the **Navigation dial** to select the cycle you want.
   - For more information on **Cycle overview**, see page **39**.
3. Tap 🌡, 🧺, or ⊙ to change the default cycle settings.
4. Tap ☝+, and then turn the **Navigation dial** to select **Options** menu.
   - For more information on **Options**, see page **42**.
5. Tap ○ to change the settings for selected options.
   - Not all cycles have options available.
6. Tap and hold ▷‖ to start operation.
   - Once you set the cycle you want, the screen displays a brief cycle description, maximum laundry load, and cycle time. You can also check the cycle progress, remaining cycle time, and information codes.

Web_IB_WD6000H_COMBO-MD_SimpleUX_EN.indd 38 2026/5/13 9:36:31

Cycle overview

Cycle	Description	Max load (kg)
Eco 40-60	• For cleaning normally soiled cotton items which are declared to be washable at 40 °C or 60 °C, together in the same cycle. This cycle is used to assess the compliance with the EU Ecodesign legislation. • This cycle is set as a default.	Max.
Cotton	• For cottons, bed linens, table linens, underwear, towels, or shirts. The washing time and the rinse count are automatically adjusted according to the load.	Max
Super Speed	• Fast completion for everyday items such as underwear and shirts. • The cycle time will differ depending on the water supply conditions, load, and type of laundry.	5
Quick Wash 15'	For lightly soiled items that you want to wash quickly. • Use less than 20 g of detergent. Using more than 20 g of detergent may leave detergent residue. • For liquid detergent, use a maximum of 20 ml of liquid detergent.	2
Mixed Load	• For mixed load consisting of cotton and synthetic.	4
Synthetics	• For fabrics that are made of polyester(diolen, trevira), polyamide (perlon, nylon), or the like.	4
Wool	• Specific for machine-washable wool. • The Wool cycle features fine pulsating and soaking to protect the wool fibres from shrinkage/distortion. • A neutral detergent is recommended.	2
Less Microfiber	• Use this cycle to reduce the amount of microfibers generated during washing synthetic clothes.	2
Hygiene Steam	• Cotton and linen fabric which have been in direct contact with the skin, e.g. underwear. • For optimum hygiene results select a temperature of 60 °C or above. • Steam cycles feature allergy care and bacteria elimination (sterilize).	4
Colours	• Featuring additional rinses and reduced spinning to ensure that the laundry is washed gently and rinsed thoroughly.	4

Web_IB_WD6000H_COMBO-MD_SimpleUX_EN.indd 39 2026/5/13 9:36:31

Operations

Cycle	Description	Max load (kg)
Towels	• For bath towels, washcloths, and mats.	4
Outdoor	• For outdoor clothes, skiwear, and sportswear that are made of functional materials such as spandex, stretch, and microfibre.	2
Bedding	• For bed spreads, bed sheets, bedding covers, etc. • For best results, wash only 1 type of bedding.	2
Delicates	• For sheer fabrics, bras, lingerie (silk), and other handwash-only fabrics. • For best performance, use liquid detergent.	2
Activewear	• For exercise wear such as sports jerseys, training pants, shirts/tops and other performance clothing. This cycle provides effective soil removal with controlled drum rotation for special fabric care.	2
Baby Care	• Featuring a high-temperature wash and extra rinses to help remove the remaining detergent effectively.	4
Cloudy Day	• For optimum spin drying at high humid condition.	Max
Silent Wash	• For reducing operating noise and vibration.	4
Wash+Dry	• For cleaning normally soiled cotton items which are declared to be washable at 40 °C or 60 °C, together in the same cycle, and to dry them in such a way that it can be immediately stored in a cupboard. This cycle is used to assess the compliance with the EU Ecodesign legislation for wash and dry.	6
Cotton Dry	• For general drying.	6
Air Wash	• This cycle is useful for removing bad odours.	1
Drum Clean+	• Cleans the drum by removing dirt and bacteria from it. • Cleans the rubber door gasket by removing dirt from the gasket. • Perform once every 40 washes with no detergent or bleach applied. Notification message appears after every 40 washes. • Make sure the drum is empty. • Do not use any cleaning agents for cleaning the drum.	-
Rinse+Spin	• Featuring an additional rinse process after applying fabric softener to the laundry.	Max

Web_IB_WD6000H_COMBO-MD_SimpleUX_EN.indd 40 2026/5/13 9:36:31

Cycle	Description	Max load (kg)
Drain/Spin	• For draining the water inside the drum and running an additional spin process to effectively remove moisture from laundry.	Max

NOTE

- Loading the household washing machine or the household washer-dryer up to the capacity indicated by the manufacturer for the respective cycles will contribute to energy and water savings.
- The noise and remaining moisture content are influenced by the spinning speed: the higher the spinning speed in the spinning phase, the higher the noise and the lower the remaining moisture content.
- The most efficient cycle in terms of energy consumption are generally those that perform at lower temperatures and longer duration.

Web_IB_WD6000H_COMBO-MD_SimpleUX_EN.indd 41 2026/5/13 9:36:31

Operations

Options

Using Options

1. Tap ☝.
2. Turn the **Navigation dial** to select the desired options.
3. Tap ○ to change the selected function's settings or start the function.

NOTE

- To return to the main screen, tap ☝ again or turn the **Navigation dial** to select **Back** and tap ○.
- If the selected function is not supported, the "**Currently not supported**" message is displayed, and the ○ button is not activated.
- When you select an options, a brief help message appears for the first ten times of use.

Dry

You can add a drying process at the end of a wash cycle.

1. Select a cycle and change the cycle settings as necessary.
2. Tap ☝.
3. Turn the **Navigation dial** to select **Dry**, and then tap ○.
4. Turn the **Navigation dial** or tap ○ repeatedly to select the desired drying time.
   - You can select from **Off, Auto, 30min, 1hr 00min, 1hr 30min, 2hr 00min, 3hr 00min, or 4hr 00min**.
5. Tap and hold ▷‖.

Prewash

You can add a preliminary washing cycle before the main wash cycle.

1. Select a cycle and change the cycle settings as necessary.
2. Tap ☝.
3. Turn the **Navigation dial** to select **Prewash**, and then tap ○.
4. Tap and hold ▷‖.

Intensive

For badly soiled laundry. The operation time for each cycle is longer than normal.

1. Select a cycle and change the cycle settings as necessary.
2. Tap ☝.
3. Turn the **Navigation dial** to select **Intensive**, and then tap ○.
4. Tap and hold ▷‖.

NOTE

Using the Intensive option will intensify the washing performance and might lower the water temperature setting.

Web_IB_WD6000H_COMBO-MD_SimpleUX_EN.indd 42 2026/5/13 9:36:31

Bubble Soak

This function helps remove a wide variety of stubborn stains. With Bubble Soak selected, laundry is thoroughly soaked in water bubbles for effective washing.

1. Select a cycle and change the cycle settings as necessary.
2. Tap ☝+.
3. Turn the **Navigation dial** to select **Bubble Soak**, and then tap ◯.
   - Bubble Soak is available with and adds up to 30 minutes to these cycles: Cotton, Super Speed, Mixed Load, Synthetics, Hygiene Steam, Towels, Bedding, Activewear, Baby care, Cloudy day, Silent Wash, and Wash+Dry.
4. Tap and hold ▷‖.

Delay End

You can set the washing machine to finish your wash automatically at a later time, choosing a delay of between 1 to 24 hours (in 1 hour or 10 minutes increments). The hour displayed indicates the time the wash will finish.

1. Select a cycle and change the cycle settings as necessary.
2. Tap ☝+.
3. Turn the **Navigation dial** to select **Delay End**, and then tap ◯.
4. Turn the **Navigation dial** to select the desired time, and then tap ◯.
5. Tap and hold ▷‖.
   - Status shows in the display and the washing machine tumbles the drum to sense the weight of the load (if load sensing is preset for the selected cycle). When load sensing is complete, the display shows the remaining time until the end of the wash cycle.
   - To cancel Delay End, tap ⏻ to restart the washing machine.

Real-life case

You want to finish a two-hour cycle 3 hours later from now. For this, you add the Delay End option to the current cycle with the 3-hour setting, and press **Start/Pause** at 2:00 p.m. Then, what happens? The washing machine starts operating at 3:00 p.m., and ends at 5:00 p.m. Provided below is the time line for this example.

Web_IB_WD6000H_COMBO-MD_SimpleUX_EN.indd 43 2026/5/13 9:36:31

Operations

My Cycles

Add or remove cycles to create a personal cycle list.

1. Tap .
2. Turn the **Navigation dial** to select **My Cycles**, and then tap .
   - You can only edit a cycle to create a personal cycle when the washing machine is not operating.
3. Turn the **Navigation dial** to select a desired cycle.
4. Tap to add or remove the selected cycle.
   - Addition and removal of the course is saved automatically.
5. Once you finish creating My Cycles, tap to return to the cycles screen.

NOTE

- The Eco 40-60 and Drum Clean+ cycles cannot be removed from the cycles list.
- You can also edit My Cycles in the SmartThings app.

Child Lock

To prevent children or infants from accidentally starting or setting the washing machine, Child Lock locks all buttons except for and .

1. Tap .
2. Turn the **Navigation dial** to select **Child Lock**, and then tap .
3. Tap to select **On** or **Off**.
   - The Child Lock icon turns on when the function is on.

NOTE

- When Child Lock is on, all buttons are disabled except for and . The washing machine door also locks.
- Tapping a button while Child Lock is on triggers an alarm with the "**Child Lock On**" message.
- You cannot open the door after a wash cycle when the Child Lock is on. Turn the function off before opening the door to take out the laundry.

AI Pattern

This function saves frequently used cycles and settings. When you turn the function on, the washing machine remembers the cycles you use most and their settings (Temp., Rinse, Spin) and displays them in frequency order.

1. Tap and hold for 3 seconds.
2. Turn the **Navigation dial** to select **AI Pattern**, and then tap .
3. Tap to select **On** or **Off**.
   - The default setting is On. Set it to Off if you do not want to use this function.
   - When you turn off the function, all the saved data resets.

Calibration

You can run calibration again for accurate weight detection.

1. Tap .

Web_IB_WD6000H_COMBO-MD_SimpleUX_EN.indd 44 2026/5/13 9:36:32

2. Turn the **Navigation dial** to select **Calibration**, and then tap ◯.
   - Calibration does not start if the door is not closed properly.
   - The drum rotates clockwise and anticlockwise for about 3 minutes.
3. When calibration is complete, the “Calibration complete” message appears on the display and the washing machine turns off automatically.

Volume

You can adjust the volume for system and media sounds.

1. Tap ☝.
2. Turn the **Navigation dial** to select **Volume**, and then tap ◯.
3. Tap ◯ to select the desired setting.
   - The default setting is 3.
   - You can select from 1, 2, 3, or 🔇.

Language

You can change the system language.

1. Tap ☝.
2. Turn the **Navigation dial** to select **Language**, and then tap ◯.
3. Turn the **Navigation dial** to select the desired language, and then tap ◯.

Wi-Fi

You can turn the washing machine's Wi-Fi on or off.

1. Tap ☝.
2. Turn the **Navigation dial** to select **Wi-Fi**, and then tap ◯.
3. Tap ◯ to select **On** or **Off**.
   - The washing machine's Wi-Fi is off as a factory default setting. However, the washing machine's Wi-Fi turns on automatically when you turn on the washing machine for the first time. Then, the final Wi-Fi setting maintains regardless of the washing machine power status.
   - Once you turn on the washing machine's Wi-Fi and connect to a network, the washing machine remains connected to the network even when you turn off the power.
   - The Wi-Fi 📶 indicates that the washing machine is connected to the router through the Wi-Fi connection.

Factory Reset

You can reset the washing machine.

1. Tap and hold ☝ for 3 seconds.
2. Turn the **Navigation dial** to select **Factory Reset**, and then tap ◯.
   - Your washing machine resets to the factory setting.

Web_IB_WD6000H_COMBO-MD_SimpleUX_EN.indd 45 2026/5/13 9:36:32

Operations

Special features

Smart control (applicable models only)

You can connect to the SmartThings app and control your washing machine remotely.

Connecting your washing machine

1. Download and open the SmartThings app on your smartphone or tablet (Android & iOS).
2. Tap ⏻ to turn on the washing machine.
3. Tap and hold .
   a. The washing machine enters AP mode and connects to your smartphone or tablet.
   b. Tap to authenticate your washing machine.
   c. Once the authentication process is complete, your washing machine is successfully connected to the app.
   - You can use various features available in the SmartThings app.

NOTE

- If your washing machine fails to connect with the SmartThings app, try again.
- Check your router if you experience any Internet connection problem after connecting your washing machine with the SmartThings app.
- If the Wi-Fi is off, tap to enter the Options menu, and select Wi-Fi to turn it on.
- Turning the washing machine's Wi-Fi on allows you connect to the washing machine via SmartThings app on your smartphone or tablet, regardless of the power status of the washing machine. However, the washing machine appears offline on the SmartThings app if the washing machine's Wi-Fi is off.
- Close the door before starting the Smart Control function.
- If you use your washing machine for a while without connecting it to the SmartThings app, a pop-up message about Smart Control will show for 3 seconds.
- If the washing machine's Wi-Fi is not connected to an AP (access point), the Wi-Fi will turn off when you turn of the power.

Stay Connect

Set up the Stay Connect function in your SmartThings app to keep Smart Control turned on at the end of a cycle. Your washing machine stays connected to the app so you can send additional instructions, whether you are at home or away.

1. If you turn on the Stay Connect function on the SmartThings app, the washing machine will stay in standby power saving mode after completing a cycle.
   - The Stay Connect function will remain active for up to 7 days if the door remains closed.
2. When the Stay Connect function is active, the Smart Control, Door Lock, and Wi-Fi icons are illuminated on your washing machine display.
3. You can conveniently control your washing machine, adding rinse, spin or dry cycles using the SmartThings app.

Web_IB_WD6000H_COMBO-MD_SimpleUX_EN.indd 46 2026/5/13 9:36:32

NOTE

- The washing machine switches to standby power saving mode when operation is paused even if the machine is not connected to the SmartThings app.
- In some circumstances, only the Door Lock icon may be illuminated.

SmartThings

Wi-Fi connection

On your smartphone or tablet, go to **Settings** and turn on the wireless connection and select an AP (Access Point).

- This appliance supports the Wi-Fi 2.4 GHz protocols.

Download

On an app market (Google Play Store, Apple App Store, Samsung Galaxy Apps), find the SmartThings app with a search term of “SmartThings”. Download and install the app on your device.

NOTE

The app is subject to change without notice for improved performance.

Log in

You must first log into SmartThings with your Samsung account. To create a new Samsung account, follow the instructions on the app. You don’t need a separate app to create your account.

NOTE

If you have a Samsung account, use the account to log in. A registered Samsung smartphone or tablet user automatically logs in.

To register your appliance to SmartThings

1. Make sure your smartphone or tablet is connected to a wireless network. If not, go to **Settings** and turn on the wireless connection and select an AP (Access Point).
2. Open **SmartThings** on your smartphone or tablet.
3. If a message of “A new device is found.”, select **Add**.
4. If no message appears, select **+** and select your appliance in a list of devices available. If your appliance is not listed, select **Device Type** > **Specific Device Model**, and then add your appliance manually.
5. Register your appliance to the SmartThings app as follows.
   a. Add your appliance to SmartThings. Make sure your appliance is connected to SmartThings.
   b. When registration is complete, your appliance appears on your smartphone or tablet.

Web_IB_WD6000H_COMBO-MD_SimpleUX_EN.indd 47 2026/5/13 9:36:32

Operations

Open Source Announcement

The software included in this product contains open source software. You may obtain the complete corresponding source code for a period of three years after the last shipment of this product by contacting our support team via http://opensource.samsung.com (Please use the “Inquiry” menu.)

It is also possible to obtain the complete corresponding source code in a physical medium such as a CD-ROM; a minimal charge will be required.

The following URL http://opensource.samsung.com/opensource/SMART_AT_051/seq/0 leads to the open source license information as related to this product. This offer is valid to anyone in receipt of this information.

NOTE

Hereby, Samsung declares that this radio equipment is in compliance with Directive 2014/53/EU and with the relevant statutory requirements in the UK. The full text of the EU declaration of conformity and the UK declaration of conformity is available at the following internet address: The official Declaration of conformity may be found at http://www.samsung.com, go to Support › Support home and enter the model name. RF max transmitter power : 20 dBm at 2.402 GHz – 2.480 GHz.

Web_IB_WD6000H_COMBO-MD_SimpleUX_EN.indd 48 2026/5/13 9:36:32

Maintenance

Keep the washing machine clean to prevent deteriorated performance and to preserve its life cycle.

Drum clean+

Perform this cycle regularly to clean the drum by removing bacteria from it. This cycle heats the water between 60 °C and 70 °C, and it also removes accumulated dirt from the rubber door gasket.

1. Tap ⏻.
2. Turn the **Navigation dial** to select **Drum Clean+**.
3. Tap and hold ▷||.

⚠ **CAUTION**

- Do not use any cleaning agents for cleaning the drum. Chemical residue in the drum may cause damage to the laundry or the drum of the washing machine.
- To prevent limescale, add the proper amount of detergent according to your local water hardness or add a water softener additive together with the detergent.

DRUM CLEAN+ reminder

An alert message appears on the control panel display when it is time to run the Drum Clean+ cycle.

- The **Drum Clean+** reminder blinks on the control panel once every 40 washes. It is advisable to perform **Drum Clean+** regularly.
- When you first see this reminder blinking, you can ignore the reminder for 6 consecutive washes. From the 7th wash, the reminder no longer appears. However, it appears again on the second 40th wash.
- Even after the last process is terminated, the "**Drum Clean complete**" message may remain.
- Even if "**Drum Clean complete**" does not disappear, the machine operates normally.
- It is recommended to run the cycle regularly for hygienic purposes.

Web_IB_WD6000H_COMBO-MD_SimpleUX_EN.indd 49 2026/5/13 9:36:32

Maintenance

Emergency drain

In case of a power failure, drain the water inside the drum before taking out the laundry.

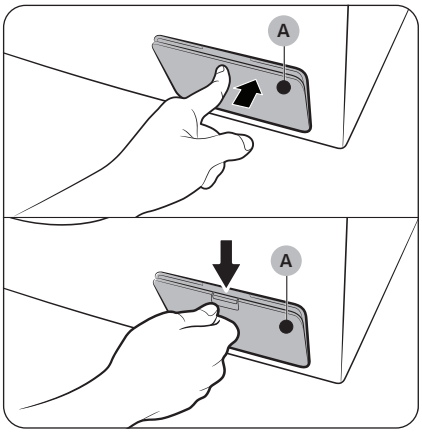

1. Power off and unplug the washing machine from the electrical outlet.
2. Open the **filter cover (A).**
   - TYPE 1: Gently press the top area of the **filter cover (A)** to open.
   - TYPE 2: Push down the latch of the **filter cover (A)** to open.

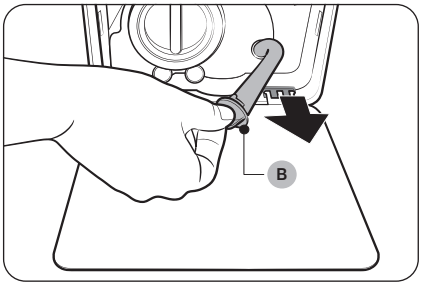

3. Put an empty, spacious container around the cover, and stretch the emergency drain tube to the container while holding the **tube cap (B)**.

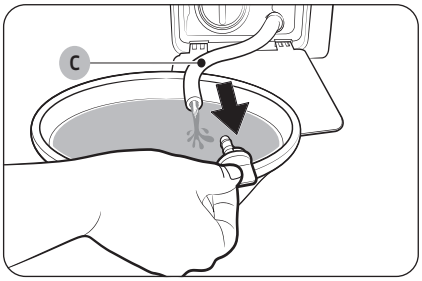

4. Open the tube cap and let water in the **emergency drain tube (C)** flow into the container.
5. When done, close the tube cap, and reinsert the tube. Then, close the filter cover.

NOTE

Use a spacious container because the water in the drum may be more than expected.

Web_IB_WD6000H_COMBO-MD_SimpleUX_EN.indd 50 2026/5/13 9:36:33

Cleaning

Surface of the washing machine

Use a soft cloth with a nonabrasive household detergent. Do not spray water onto the washing machine.

Mesh filter

Clean the mesh filter of the water hose once or twice a year.

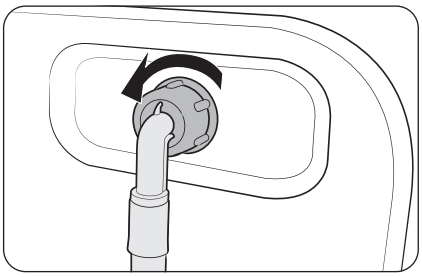

1. Turn off the washing machine, and unplug the power cord.
2. Close the water tap.
3. Loosen and disconnect the water hose from the back of the washing machine. Cover the hose with a cloth to prevent water from gushing out.

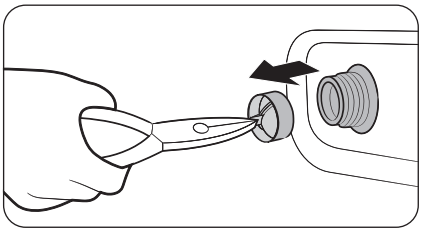

4. Use pliers to pull out the mesh filter from the inlet valve.
5. Submerge the mesh filter deeply in water so that the threaded connector is also submerged.
6. Dry the mesh filter completely in the shade.
7. Reinsert the mesh filter into the inlet valve, and reconnect the water hose to the inlet valve.
8. Open the water tap.

NOTE

If the mesh filter is clogged, an information code of “**Check water supply**” appears on the screen.

Web_IB_WD6000H_COMBO-MD_SimpleUX_EN.indd 51 2026/5/13 9:36:33

Maintenance

Debris filter

It is advisable to clean the debris filter every 2 months to prevent its clogging. A clogged debris filter may reduce the bubble effect.

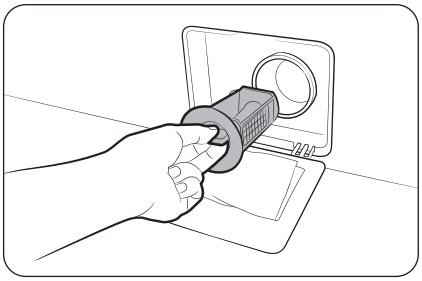

1. Turn off the washing machine, and unplug the power cord.
2. Drain the remaining water inside the drum. See the **Emergency drain** section.
3. Open the **filter cover.**
   - TYPE 1: Gently press the top area of the **filter cover** to open.
   - TYPE 2: Push down the latch of the **filter cover** to open.
4. Turn the debris filter knob to the left, and drain off the remaining water.

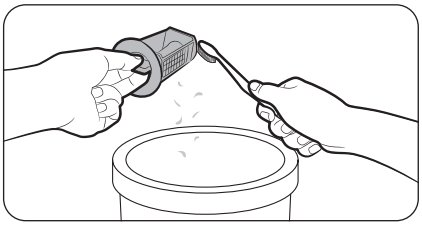

5. Clean the debris filter using a soft brush.
   - Make sure to discard the debris into the waste bin.

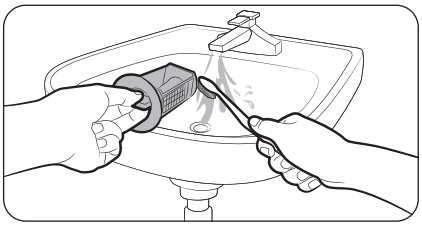

6. Clean the debris filter using soft brushes. Make sure the drain pump propeller inside the filter is unclogged.
7. Reinsert the debris filter, and turn the filter knob to the right.

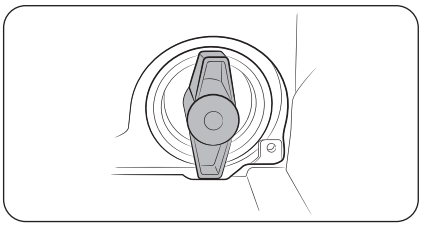

NOTE

- Some debris filters feature a safety knob that is designed to prevent accidents by children. To open the safety knob of the debris filter, push in and turn it anticlockwise. The spring mechanism of the safety knob helps open the filter.
- To close the safety knob of the debris filter, turn it clockwise. The spring makes a rattling sound, which is normal.

Web_IB_WD6000H_COMBO-MD_SimpleUX_EN.indd 52 2026/5/13 9:36:34

NOTE

- The “**Clean drain filter**” message appears on the control panel display after every 100 washes.
- If the pump filter is clogged, an information code of “**Clean drain filter**” appears on the screen.

CAUTION

- Make sure the filter knob is closed properly after cleaning the filter. Otherwise, this may cause a leak.
- Make sure the filter is inserted properly after cleaning it. Otherwise, this may cause an operational failure or a leak.

Web_IB_WD6000H_COMBO-MD_SimpleUX_EN.indd 53 2026/5/13 9:36:34

Maintenance

Detergent drawer

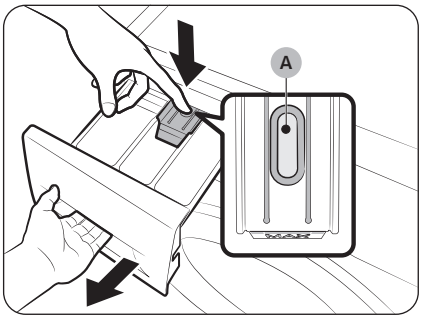

1. While holding down the **release lever (A)** inside the drawer, slide open the drawer.
2. Remove the release lever and the liquid detergent guide from the drawer.

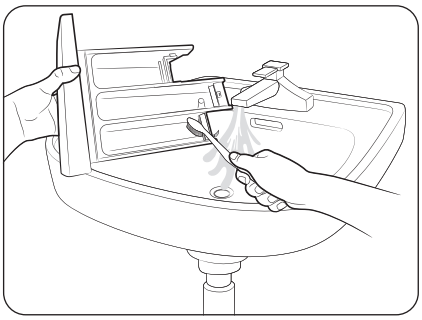

3. Clean the drawer components in flowing water using a soft brush.

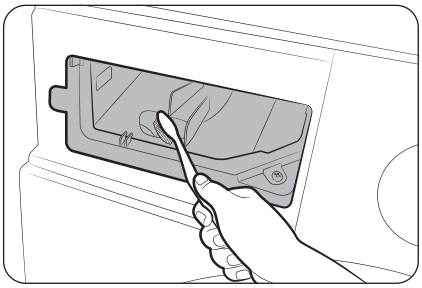

4. Clean the drawer recess using a soft brush.
5. Reinsert the release lever and the liquid detergent guide to the drawer.
6. Slide the drawer inward to close it.

NOTE

To remove remaining detergent, perform the **Rinse+Spin** cycle with the drum being empty..

Web_IB_WD6000H_COMBO-MD_SimpleUX_EN.indd 54 2026/5/13 9:36:34

Defrosting your washing machine

The washing machine may freeze when it drops below 0 °C.

1. Turn off the washing machine, and unplug the power cord.
2. Pour warm water over the water tap to loosen the water hose.
3. Disconnect the water hose, and soak it in warm water.
4. Pour warm water into the drum and leave it for about 10 minutes.
5. Reconnect the water hose to the water tap.

NOTE

If the washing machine still doesn't operate normally, repeat the above steps until it operates normally.

Care against an extended time of disuse

Avoid leaving the washing machine unused for an extended time. If this is the case, drain the washing machine and unplug the power cord.

1. Turn the **Navigation dial** to select **Rinse+Spin**.
2. Empty the drum, and then tap and hold ▷||.
3. When the cycle is complete, close the water tap and disconnect the water hose.
4. Turn off the washing machine, and unplug the power cord.
5. Open the door to let air circulate through the drum.

Web_IB_WD6000H_COMBO-MD_SimpleUX_EN.indd 55 2026/5/13 9:36:34

Troubleshooting

If there is any problem, check the information message on the LCD screen and follow the on-screen instructions.
If the problem persists, please contact the service center.

Checkpoints

If you encounter a problem with the washing machine, first check the table below and try these suggestions.

Problem	Action
Does not start.	• Make sure the washing machine is plugged in. • Make sure the door is properly closed. • Make sure the water taps are open. • Tap and hold ▷‖ to start the washing machine. • Make sure Child Lock is not activated. • Before the washing machine starts to fill, it will make a series of clicking noises to check the door lock and will do quick drain. • Check the fuse or reset the circuit breaker. • Check if power is supplied properly. • Low voltage detected. - Check if the power cord is plugged in. • Make sure laundry is not caught in the door.
Water supply is insufficient, or no water is supplied.	• Fully open the water tap. • Make sure the door is properly closed. • Make sure the water supply hose is not frozen. • Make sure the water supply hose is not kinked or clogged. • Make sure there is sufficient water pressure. • Make sure that the cold water tap and the hot water tap are properly connected. • Clean the mesh filter as it may be clogged.
After a cycle, detergent remains in the detergent drawer.	• Make sure the washing machine is running with sufficient water pressure. • Make sure the detergent is added to the centre of the detergent drawer. • Make sure the rinse cap is inserted properly. • If using granular detergent, make sure the detergent selector is in the upper position. • Remove the rinse cap and clean the detergent drawer.

Web_IB_WD6000H_COMBO-MD_SimpleUX_EN.indd 56 2026/5/13 9:36:34

Problem	Action
Excessive vibrations or makes noise.	• Make sure the washing machine is installed on a level, solid floor that is not slippery. If the floor is not level, use the levelling feet to adjust the height of the washing machine. • Make sure the shipping bolts are removed. • Make sure the washing machine is not in contact with any other object. • Make sure the laundry load is balanced. • The motor can cause noise during normal operation. • Overalls or clothes with metallic decorations can cause noise while being washed. This is normal. • Metal objects such as coins can cause noise. After washing, remove these objects from the drum or filter case. • Redistribute the load. If only one item of clothing needs washing, such as a bathrobe or pair of jeans, the final spin result might be unsatisfactory, and a "**Redistribute unbalanced load and restart**" check message will be shown in the display.
Does not drain and/ or spin.	• Make sure the drain hose is straightened all the way to the drain system. If you encounter a drain problem, call for service. • Make sure the debris filter is not clogged. • Close the door and tap and hold ▷‖. For your safety, the washing machine will not tumble or spin unless the door is closed. • Make sure the drain hose is not frozen or clogged. • Make sure the drain hose is connected to a drain system that is not clogged. • If the washing machine is not supplied with sufficient power, the washing machine will temporarily not drain or spin. As soon as the washing machine regains sufficient power, it will operate normally. • Make sure the drain hose is positioned correctly, depending on the connection type. • Clean the debris filter as it may be clogged.
The door does not open.	• Tap and hold ▷‖ to stop the washing machine. • It may take a few moments for the door lock mechanism to disengage. • The door will not open until 3 minutes after the washing machine has stopped or the power has been off. • Make sure all the water in the drum is drained. • The door may not open if water remains in the drum. Drain the drum and open the door manually. • Make sure the door lock light is off. The door lock light turns off after the washing machine has drained.

Web_IB_WD6000H_COMBO-MD_SimpleUX_EN.indd 57 2026/5/13 9:36:34

Troubleshooting

Problem	Action
Excessive suds.	• Make sure you use the recommended types of detergent as appropriate. • Use high efficiency (HE) detergent to prevent oversudsing. • Reduce the detergent amount for soft water, small loads, or lightly soiled loads. • Non-HE detergent is not recommended.
Cannot add additional detergent.	• Make sure the remaining amount of detergent and fabric softener is not over the limit.
Stops.	• Plug the power cord into a live electrical outlet. • Check the fuse or reset the circuit breaker. • Close the door, and tap and hold ▷‖ to start the washing machine. For your safety, the washing machine will not tumble or spin unless the door is closed. • Before the washing machine starts to fill, it will make a series of clicking noises to check the door lock and will do quick drain. • There may be a pause or soak period in the cycle. Wait briefly, and the washing machine may start. • Make sure the mesh filter of the water supply hose at the water taps is not clogged. Periodically clean the mesh filter. • If the washing machine is not supplied with sufficient power, the washing machine will temporarily not drain or spin. As soon as the washing machine regains sufficient power, it will operate normally.
Fills with the wrong water temperature.	• Fully open both taps. • Make sure the temperature selection is correct. • Make sure the hoses are connected to the correct taps. Flush water lines. • Make sure the water heater is set to supply a minimum of 49 °C hot water at the tap. Also, check the water heater capacity and recovery rate. • Disconnect the hoses and clean the mesh filter. The mesh filter may be clogged. • While the washing machine fills, the water temperature may change as the automatic temperature control feature checks incoming water temperature. This is normal. • While the washing machine fills, you may notice just hot and/or just cold water going through the dispenser when cold or warm temperatures are selected. This is a normal function of the automatic temperature control feature as the washing machine determines the water temperature.
Load is wet at the end of a cycle.	• Use the High or Extra High spin speed. • Use high efficiency (HE) detergent to reduce oversudsing. • Load is too small. Small loads (one or two items) may become unbalanced and not spin completely. • Make sure the drain hose is not kinked or clogged.

Web_IB_WD6000H_COMBO-MD_SimpleUX_EN.indd 58 2026/5/13 9:36:35

Problem	Action
Leaks water.	• Make sure the door is properly closed. • Make sure all hose connections are tight. • Make sure the end of the drain hose is correctly inserted and secured to the drain system. • Avoid overloading. • Use high efficiency (HE) detergent to prevent oversudsing. • Check the drain hose. - Make sure the end of the drain hose is not placed on the floor. - Make sure the drain hose is not clogged. • Check if there is something stuck between the door and the diaphragm. - If there is something stuck between the door and the diaphragm, it may cause a leak or damage to the diaphragm.
Has odours.	• Excessive suds collect in recesses and can cause foul odours. • Run cleansing cycles to sanitise periodically. • Clean the door seal (diaphragm). • Dry the washing machine interior after a cycle has finished.
No bubbles are seen (Bubble models only).	• You may not be able to see bubbles if there is too much items in the drum. • Severely contaminated laundry may not generate bubbles.
A message appears on the display to alert that dispenser is open.	• Check if the detergent drawer is closed properly. - Open the detergent drawer and close it again. Make sure it's closed properly.
Increased time of washing.	• The actual washing time may differ from the estimated time initially displayed on the control panel upon cycle selection.
Stains on the clothes.	• Do not pour fabric softener directly onto your clothes. Applying it directly to clothing can leave stains (for example, oily spots or ingrained dirt) that might be difficult to remove.

- If a problem persists, contact a service center. The number of the service center is on the label attached to the product.
- Samsung is not liable for any damage to the product, any injury, or any other product safety issue caused by a repair which does not follow the instructions in these Repair Guides. Any damage to the product caused by an attempted repair (by anyone other than a Samsung certified service provider) will also not be covered by the warranty.

Web_IB_WD6000H_COMBO-MD_SimpleUX_EN.indd 59 2026/5/13 9:36:35

Troubleshooting

Information codes

If the washing machine fails to operate, you may see an information code on the screen. Check the table below and try the suggestions.

Code	Action
Clean drain filter	Water is not draining. • Make sure the drain hose is not frozen or clogged. • Make sure the drain hose is positioned correctly, depending on the connection type. • Clean the debris filter as it may be clogged. • Make sure the drain hose is straightened all the way to the drain system. • If the information code remains, contact a customer service centre
Check water supply faucets and restart	Water is not supplied. • Make sure the water taps are open. • Make sure the water hoses are not clogged. • Make sure the water taps are not frozen. • Make sure the washing machine is operating with sufficient water pressure. • Make sure that the cold water tap and the hot water tap are properly connected. • Clean the mesh filter as it may be clogged. • All buttons will be disabled for 3 minutes after the information code appears. • When the "**Check water supply faucets and restart**" message appears, the machine drains water for 3 minutes. In the meantime, the Power button will be disabled.
Please connect the hot/cold water hose connection correctly	• Make sure the cold water supply hose is firmly connected to the cold water tap. If it is connected to the hot water tap, the laundry may be deformed with some cycles.
Redistribute unbalanced load and restart	Spinning does not work. • Make sure laundry is spread out evenly. • Make sure the washing machine is on a flat, stable surface. • Redistribute the load. If only one item of clothing needs washing, such as a bathrobe or pair of jeans, the final spin result might be unsatisfactory, and an "**Redistribute unbalanced load and restart**" check message will be shown in the display.
Close the washer door and try again	Operating the washing machine with the door open. • Make sure the door is properly closed. • Make sure laundry is not caught in the door.

Web_IB_WD6000H_COMBO-MD_SimpleUX_EN.indd 60 2026/5/13 9:36:35

Code	Action
OC	Water has overflowed. • Restart after spinning. • If the information code remains on the display, contact a local Samsung service centre.
LC, LC1	Check the drain hose. • Make sure the end of the drain hose is not placed on the floor. • Make sure the drain hose is not clogged. • If the information code remains, contact a customer service centre.
3C	Check the drum motor for operation. • Try restarting the cycle. • If the information code remains, contact a customer service centre.
3CP	The electronic control needs to be checked. • Try restarting the cycle. • If the information code remains, contact a customer service centre.
UC	Check the pulsator motor for operation. • Check if power is supplied properly. • If the information code remains, contact a customer service centre.
	Low voltage detected. • Check if the power cord is plugged in. • If the information code remains, contact a customer service centre.
HC	High temperature heating check. • If the information code remains, contact a customer service centre.
1C	The Water Level sensor is not working properly. • Turn the machine off, and restart the cycle. • If the information code remains, contact a customer service centre.
AC	Check communications between main and sub PBAs. • Turn the machine off, and restart the cycle. • If the information code remains, contact a customer service centre.
8C	The MEMS sensor is not working properly. • Turn the machine off, and restart the cycle. • If the information code remains, contact a customer service centre.
AC6	Check communications between the main and the inverter PBAs. • Depending on the state, the machine may automatically returns to normal operation. • Turn the machine off, and restart the cycle. • If the information code remains, contact a customer service centre.

Web_IB_WD6000H_COMBO-MD_SimpleUX_EN.indd 61 2026/5/13 9:36:35

Troubleshooting

Code	Action
DC1	The Main Door lock/unlock is not working properly. • Turn the machine off, and restart the cycle. • If the information code remains, contact a customer service centre.

If any information code keeps appearing on the screen, contact a local Samsung service centre.

Web_IB_WD6000H_COMBO-MD_SimpleUX_EN.indd 62 2026/5/13 9:36:35

Specifications

Fabric care chart

The following symbols provide garment care direction. The Clothing care labels include symbols for drying, bleaching, drying and ironing, or dry cleaning when necessary. The use of symbols ensures consistency among garment manufacturers of domestic and imported items.

Follow care label directions to maximize garment life and reduce laundering problems.

Washing

95	95 °C boil wash.
60	60 °C coloured wash.
60	60 °C coloured wash. (“Easy care” coloured wash)
40	40 °C coloured wash.
40	40 °C mild wash.
40	40 °C very mild wash.
30	30 °C fine wash.
30	30 °C mild fine wash.
30	30 °C very mild fine wash.
	Hand wash.
	Do not wash.

NOTE

The numbers in the wash tub specify the maximum washing temperatures in degrees celsius Celsius which must not be exceeded.

Bleaching

	Any bleach allowed.
	Only oxygen bleach allowed.
	Do not bleach.

Drying

	Tumble drying / Drying at a temperature of 80 °C with a normal drying process.
	Tumble drying / Drying at a temperature of 60 °C with a mild drying process.
	Do not tumble dry
	Line drying.
	Drip line drying.
	Flat drying.
	Drip flat drying.
	Line drying in the shade.
	Drip line drying in the shade.
	Flat drying in the shade.
	Drip flat drying in the shade.

NOTE

- The dots indicate the drying level of the dryer.
- The lines indicate the type and place of the drying.

Web_IB_WD6000H_COMBO-MD_SimpleUX_EN.indd 63 2026/5/13 9:36:38

Specifications

Ironing

	Iron at maximum sole plate temperature of 200 °C.
	Iron at maximum sole plate temperature of 150 °C.
	Iron at maximum sole plate temperature of 110 °C. Caution when using steam irons (work without steam).
	Do not iron.

NOTE

The dots indicate the temperature ranges for ironing (regulator, steam, travel irons and ironing machines).

Professional care

P	Professional dry-cleaning in perchloroethylene and/or hydrocarbons (heavy benzines) with normal process.
P	Professional dry-cleaning in perchloroethylene and/or hydrocarbons (heavy benzines) with gentle process.
F	Professional dry-cleaning in hydrocarbons (heavy benzines) with normal process.
F	Professional dry-cleaning in hydrocarbons (heavy benzines) with gentle process.
	Do not dry-clean.
W	Professional wet-cleaning.
W	Mild professional wet-cleaning.
W	Very mild professional wet-cleaning.
W	Do not wet-clean.

NOTE

- The letters in a circle indicate the solvents (P, F) used in dry cleaning or wet cleaning (W).
- Generally, the line under the symbol indicates a milder treatment (e.g. gentle cycle for easy-care items). The double line indicates care levels with particularly gentle treatment.

Web_IB_WD6000H_COMBO-MD_SimpleUX_EN.indd 64 2026/5/13 9:36:40

Protecting the environment

- This appliance is manufactured from recyclable materials. If you decide to dispose of it, please observe local waste disposal regulations. Cut off the power cord so that the appliance cannot be connected to a power source. Remove the lid so that animals and small children cannot get trapped inside the appliance.
- Do not exceed the detergent quantities recommended in the detergent manufacturers' instructions.
- Use stain removal products and bleaches before the wash cycle only when necessary.
- Save water and electricity by only washing full loads (the exact amount depends upon the program used).

Spare parts guarantee

We guarantee that the following spare parts will be available to professional repairers and end-users for a minimum period of 10 years after placing the last unit of the model on the market.

- Door, door hinges and seals, other seals, door locking assembly, and plastic peripherals such as detergent dispensers.
- Listed parts can be purchased at below website.
  - http://www.samsung.com/support

Standby power consumption

Power consumption	Off mode	0.50 W
	Network standby mode	2.00 W
	Time in networked standby mode (WI-FI)	10 min

Web_IB_WD6000H_COMBO-MD_SimpleUX_EN.indd 65 2026/5/13 9:36:40

Specifications

Specification sheet

" * " Asterisk(s) means variant model and can be varied (0-9) or (A-Z).

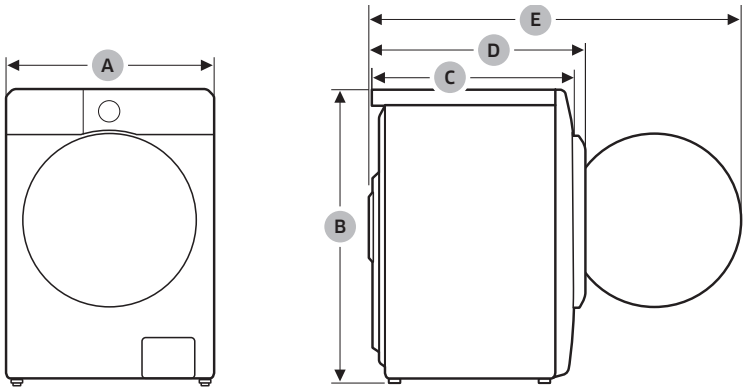

Type			Front loading washing machine	
Model name			WD9*HG6*****	WD1*HG6*****
Dimensions	A (Width)		600 mm	
	B (Height)		850 mm	
	C (Depth)		590 mm	
	D		645 mm	
	E		1085 mm	
Water pressure			50-1000 kPa	
Net weight			70.0 kg	
Maximum load capacity		Washing and spinning	9.0 kg	10.0 kg
		Drying	6.0 kg	6.0 kg
Power consumption	Washing and heating	AC 220-240 V / 50 Hz	1900-2300 W	
	Dry		1600-1900 W	
Spin revolutions			1400 RPM	

NOTE

- The design and specifications are subject to change without notice for quality improvement purposes.
- The dimensions stated here may differ slightly from the actual measurements depending on the measuring method.

Web_IB_WD6000H_COMBO-MD_SimpleUX_EN.indd 66 2026/5/13 9:36:40

Indicative information (According to EU 2019/2023)

Model	Cycles	Capacity (kg)	Program Time (HH:MM)	Energy Consumption (kWh/Cycle)	Water Consumption (L/cycle)	Maximum Temperature (°C)	Remaining Moisture Content (%)	Spinning Speed (RPM)
WD9*HG6*****	Eco40-60	9.0	3:48	0.523	75.0	25	53.9	1400
		4.5	2:54	0.263	44.0	22	53.9	1400
		2.5	2:44	0.188	33.5	21	53.9	1400
	Cotton 20°C	9.0	3:26	0.319	83.0	20	50.0	1400
	Cotton 60°C	9.0	2:32	1.365	95.0	60	50.0	1400
	Cotton 60°C +bubble soak	9.0	3:02	1.820	114.0	60	50.0	1400
	Synthetics 40°C	4.0	2:59	0.736	48.0	40	33.0	1200
	15' Quick Wash	2.0	0:15	0.015	30.0	15	105.0	800
	Wash+Dry	6.0	7:11	3.753	107.7	22	-	1400
		3.0	4:55	2.065	64.6	22	-	1400
WD1*HG6*****	Eco40-60	10	3:59	1.040	80.0	35	53.9	1351
		5	3:00	0.420	47.5	28	53.9	1351
		2.5	3:00	0.211	36.5	23	53.9	1351
	Cotton 20°C	10	3:26	0.350	75.0	20	53.0	1351
	Cotton 60°C	10	2:32	1.500	110.0	60	53.0	1351
	Cotton 60°C +bubble soak	10	3:02	2.000	120.0	60	53.0	1351
	Synthetics 40°C	4	2:59	0.820	58.0	40	33.0	1200
	15' Quick Wash	2	0:15	0.015	42.0	15	105.0	800
	Wash+Dry	6	7:11	3.753	107.7	22	-	-
		3	4:55	2.065	64.6	22	-	-

- The values given for programmes other than the Eco 40-60 programme and the wash and dry cycle are indicative only.
- The time values stated here may differ from the actual values due to the influence of the water pressure/hardness/temperature, type/amount/soiling level of the laundry, type/amount of the detergent used, power supply, and the selected additional functions.

EPREL information

To access energy labelling information about this product on the European Product Registry for Energy Labelling (EPREL), go to https://eprel.ec.europa.eu/qr/****** where ****** is the product's EPREL registration number. You can find the registration number on the rating label of your product.

Web_IB_WD6000H_COMBO-MD_SimpleUX_EN.indd 67 2026/5/13 9:36:41

Contact information

QUESTIONS OR COMMENTS?

COUNTRY	CALL	OR VISIT US ONLINE AT
UK	0333 000 0333	www.samsung.com/uk/support
IRELAND (EIRE)	0818 717100	www.samsung.com/ie/support
GERMANY	06196 77 555 77	www.samsung.com/de/support
FRANCE	01 48 63 00 00	www.samsung.com/fr/support
SPAIN	91 175 00 15	www.samsung.com/es/support
PORTUGAL	210 608 098 Chamada para a rede fixa nacional Dias úteis das 9h às 20h	www.samsung.com/pt/support
LUXEMBURG	261 03 710	www.samsung.com/be_fr/support
NETHERLANDS	088 90 90 100	www.samsung.com/nl/support
BELGIUM	02-201-24-18	www.samsung.com/be/support (Dutch) www.samsung.com/be_fr/support (French)
NORWAY	21 62 90 99	www.samsung.com/no/support
DENMARK	70 70 19 70	www.samsung.com/dk/support
FINLAND	030-622 75 15	www.samsung.com/fi/support
SWEDEN	0771-400 300	www.samsung.com/se/support
AUSTRIA	0800 72 67 864 (0800-SAMSUNG)	www.samsung.com/at/support
SWITZERLAND	0800 726 786	www.samsung.com/ch/support (German) www.samsung.com/ch_fr/support (French)
HUNGARY	0680SAMSUNG (0680-726-7864)	www.samsung.com/hu/support
CZECH	800 - SAMSUNG (800-726786)	www.samsung.com/cz/support
SLOVAKIA	0800 - SAMSUNG (0800-726 786)	www.samsung.com/sk/support
CROATIA	072 726 786	www.samsung.com/hr/support
BOSNIA	055 233 999	www.samsung.com/ba/support
North Macedonia	023 207 777	www.samsung.com/mk/support
MONTENEGRO	020 405 888	www.samsung.com/support
SLOVENIA	080 697 267 (brezplačna številka)	www.samsung.com/si/support
SERBIA	011 321 6899	www.samsung.com/rs/support
Kosovo	038 40 30 90	www.samsung.com/support
ALBANIA	045 620 202	www.samsung.com/al/support

Web_IB_WD6000H_COMBO-MD_SimpleUX_EN.indd 68 2026/5/13 9:36:41

COUNTRY	CALL	OR VISIT US ONLINE AT
BULGARIA	0800 111 31 - Безплатен за всички оператори *3000 - Цена на един градски разговор или според тарифата на мобилният оператор 09:00 до 18:00 - Понеделник до Петък	www.samsung.com/bg/support
ROMANIA	0800872678 - Apel gratuit *8000 - Apel tarifat în reţea Program Call Center Luni - Vineri: 9 AM - 6 PM	www.samsung.com/ro/support
ITALIA	800-SAMSUNG (800.7267864)	www.samsung.com/it/support
CYPRUS	8009 4000 only from landline, toll free	www.samsung.com/gr/support
GREECE	80111-SAMSUNG (80111 726 7864) from mobile and land line (+30) 210 6897691 from mobile and land line	
POLAND	801-172-678* * (opłata według taryfy operatora)	http://www.samsung.com/pl/support/
LITHUANIA	8-800-77777	www.samsung.com/lt/support
LATVIA	8000-7267	www.samsung.com/lv/support
ESTONIA	800-7267	www.samsung.com/ee/support

Web_IB_WD6000H_COMBO-MD_SimpleUX_EN.indd 69 2026/5/13 9:36:41

Memo

Memo

SAMSUNG