SIEMENS



Siemens
BI630CNS1B
Warming drawer

Predeccessor:

Successor:

EAN code:
4242003676585

sales programme:

iQ700

Warming drawer

BI630CNS1B

Design
- 140 mm
- Handleless push-pull opening mechanism
- Telescopic pull-out drawer

Features
- Cool door
- Easy to clean toughened glass heating plate
- Temperature control in 4 levels: ca. 30°C - 80°C (glass surface temperature)
- Food warming and defrosting
  (3 settings)
  Cookware and utensil warming
  (1 setting)
- Can accommodate up to:
  -12 plates
  -64 espresso cups
- Weight capacity 25kg

Performance/technical information
- Cavity volume: 20 litres
- Length of mains cable: 150 cm
- Connected load: 0.81 kW
- Appliance dimension (hxwxd): 140 mm x 595 mm x 548 mm
- Niche dimension (hxwxd): 140 mm x 560 mm - 568 mm x 550 mm

Included accessories

Optional accessories

Alternative colors available

Technical Data

Characteristics
Design : Built-in
Color / Material Front : Black, Stainless steel
Capacity (in number of plates) : 12
Maximum number of espresso cups : 64
Dimensions of the product (mm) : 140 x 595 x 548
Required niche size for installation (HxWxD) : 140 x 560 x 550
EAN code : 4242003676585

Consumption and connection features
Electrical connection rating (W) : 810
Current (A) : 10
Nominal power (kW) : 220-240
Frequency (Hz) : 50; 60
Plug type : GB plug

SIEMENS

iQ700
Warming drawer
BI630CNS1B



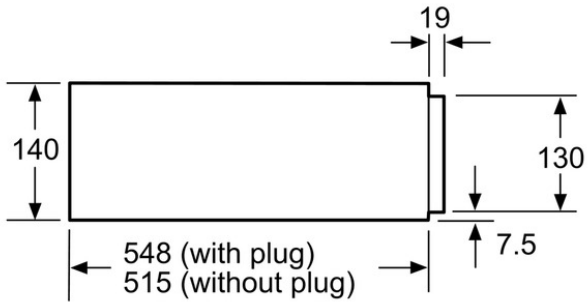

Compact ovens with an appliance height of 455 mm can be installed above a warming drawer.
An intermediate floor is not required.

measurements in mm

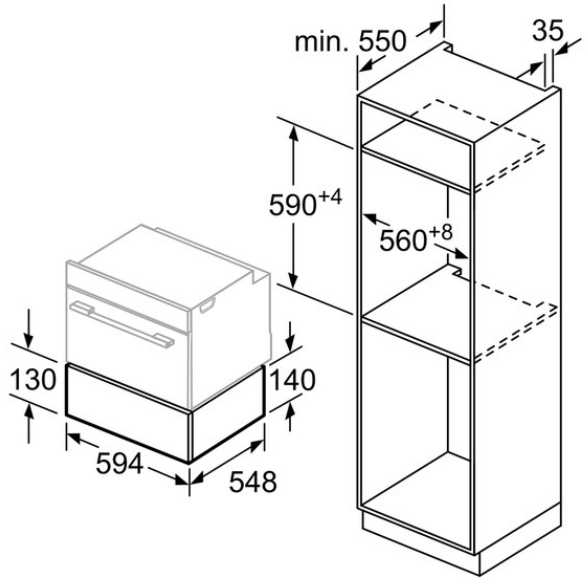

measurements in mm