SIEMENS





Siemens
CM656GBS6B
Compact oven with microwave

Predeccessor:
CM656GBS1B

Successor:

EAN code:
4242003751886

sales programme:

iQ700

Compact oven with microwave

CM656GBS6B

Design
- Stainless steel control dial
- Bar handle
- Drop down oven door, softClose, softOpen
- Cavity inner surface: Enamel anthracite
- Full colour display

Key features
- EcoClean Direct : ceiling, back panel, side liners
- ecoClean® setting
- 3.7" TFT touchDisplay
- TFT clearText display
- Digital temperature display with proposal
  Actual temperature display
  Heating-up indicator
  Sabbath setting
- Control panel lock
  Automatic safety switch off
  Residual heat indicator
  start button
  Door contact switch

Features
- Electronic oven clock timer
- LED Illumination
- Microwave top door
- 3 shelf positions
- Stainless-steel fan
- Integral cooling fan

Programmes/functions
- Compact oven with microwave with 13 heating methods:
  4D hot air, hotairEco, conventional oven, Conventional heat ECO, hot air grilling, full width grill, half width grill, intensive hot air, coolStart, bottom heat, low temperature cooking, keep warm, plate warming
- Additional heating methods with microwave: Microwave, Combi microwave variable
- Fast pre-heating function
- cookControl Plus
- Info button

Performance/technical information
- 45 litres
- Maximum door temperature 30 °C
- Temperature range 30 °C - 300 °C
- Max. Power: 1000 W; 5 Microwave power settings (90 W,180 W,360 W,600 W,1000 W) with Inverter (MW)

Included accessories

1 x combination grid, 1 x universal pan

Optional accessories

- HZ6MCC0 Cookbook

Alternative colors available

Technical Data

Characteristics
Type of micro-wave oven : MW-Combi
Control panel : Electronic
Color / Material Front : Stainless steel
Dimensions of the product (mm) : 455 x 595 x 548
Cavity dimensions (mm) : 237.0 x 480 x 392.0
Length of electrical supply cord (cm) : 120
Net weight (kg) : 36.0
Gross weight (kg) : 38.0
EAN code : 4242003751886

Consumption and connection features
Max. microwave power (W) : 1000
Connection rating (W) : 3650
Current (A) : 16
Nominal power (kW) : 220-240
Frequency (Hz) : 60; 50
Plug type : no plug

SIEMENS

iQ700
Compact oven with microwave
CM656GBS6B



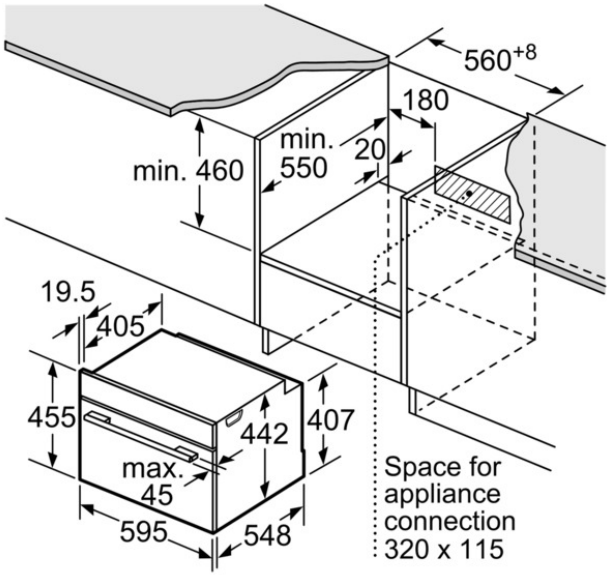

measurements in mm

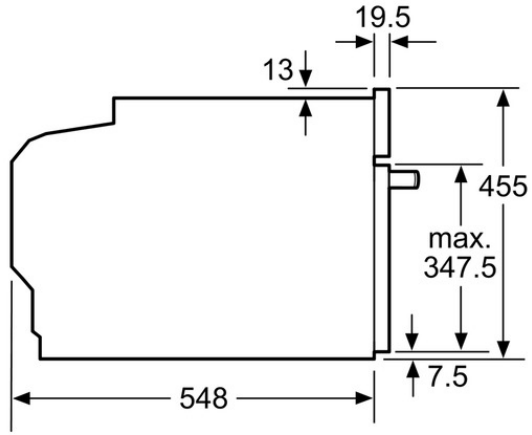

measurements in mm

Installation with a hob.

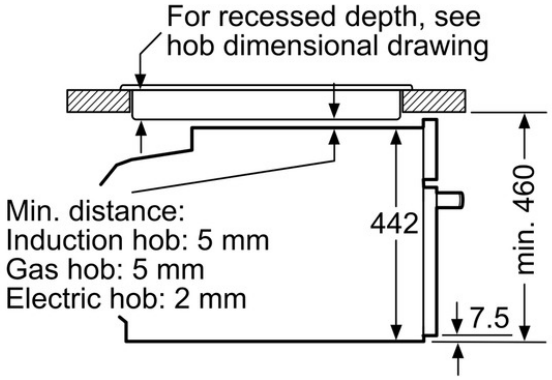

measurements in mm

If the compact appliance will be installed underneath a hob, the following worktop thicknesses (including substructure if necessary) must be taken into acccount.

Hob type	**min. worktop thickness**	
	fitted	flush
Induction hob	42 mm	43 mm
Full surface induction hob	48 mm	53 mm
Gas hob	37 mm	47 mm
Electric hob	28 mm	30 mm

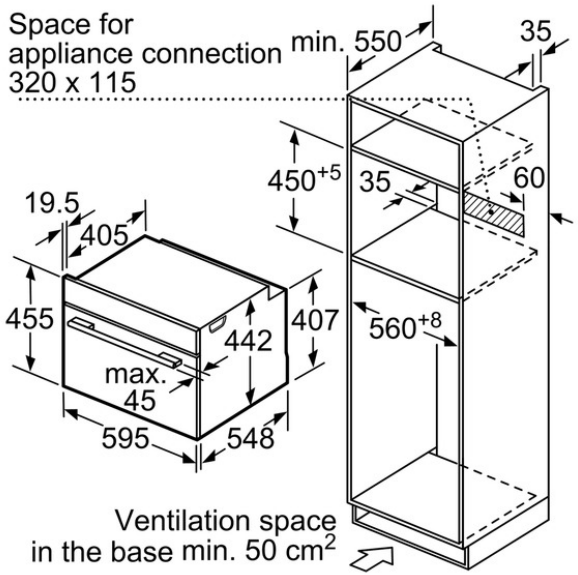

measurements in mm